silent 700

Electronic Data Terminals

Models 732/733 ASR/KSR Maintenance Manual

MANUAL NO. 960129-9701, Rev. E
REVISED 1 NOVEMBER 1977

TEXAS INSTRUMENTS
INCORPORATED

Copyright 1978 by Texas Instruments Incorporated
All Rights Reserved — Printed In USA

The information and/or drawings set forth in this document and all rights in and to inventions disclosed herein and patents which might be granted thereon disclosing or employing the materials, methods, techniques or apparatus described herein are the exclusive property of Texas Instruments Incorporated.

No copies of the information or drawings shall be made without the prior consent of Texas Instruments Incorporated.

INSERT LATEST CHANGED PAGES.DESTROY SUPERSEDED PAGES

LIST OF EFFECTIVE PAGES

Note. The portion of the text affected by the changes is indicated by a vertical bar in the outer margins of the page.

Models 732/733 ASR/KSR Maintenance Manual,
0960129-9701, Rev. E
Original Issue: 15 March 1973

Total number of pages in this publication is consisting of the following:

Page No.	Change No.	Page No.	Change No.	Page No.	Change No.

CHANGE NOTICES

Revision Letter	Date	ECN Number	ECN Level	Description
A	10-15-73	388372	C	Addition of options and accessories
–	11-28-73	388722	C	Update text and drawings in Appendixes
B	1-28-74	386150	B	Update drawings; delete drawings
–	6-1-74	389261	C	Add options and update drawings
–	11-15-74	399144	C	Update; delete obsolete material, add drawings
C	5-1-75	391729	B	Update; delete obsolete material, add drawings and text
–	11-1-75	406679	C	Update; delete obsolete material, add drawings and text
D	3-1-76	409742	C	Update; add drawings and text
–	6-15-76	409581	B	Update; add options
–	12-1-76	416863	C	Update; add drawings
–	5-9-77	420110	C	Update page 5-7
E	9-1-77	426177	C	Update; delete obsolete material, add L/M

USER'S CRITIQUE

To make this manual more useful to you, our customer, we will appreciate your comments and recommendations on any improvements to this manual you feel are needed. After using this manual, please take the first opportunity to complete this questionaire and return it, postpaid, to the factory where your comments will be given every consideration. Thank you.

MANUAL ORGANIZATION

Was the Table of Contents detailed enough and useful?

☐ Yes, ☐ No, ☐ Comment _____

Were the manual sections well organized?

☐ Yes, ☐ No, ☐ Comment _____

GRAPHICS

How would you rate the quality of the photos, diagrams, etc.?

☐ Excellent, ☐ Adequate, ☐ Poor

Were there enough illustrations throughout the manual?

☐ Yes, ☐ No, ☐ Comment _____

Were the tables clear and easy to follow?

☐ Yes, ☐ No, ☐ Comment _____

TEXT

How would you rate the quality of the technical writing?

☐ Excellent, ☐ Adequate, ☐ Poor

If there are particular paragraphs, instructions, etc., you feel need clarification or rewriting, please identify them and add your comments. _____

_____

_____

GENERAL COMMENTS _____

_____

_____

_____

_____

_____

Respondent _____ Title _____

Company _____

Address _____

City/State/Zip _____

Manual Title 732/733 Maintenance Manual Manual No. 960129-9701 04-1-78

NO POSTAGE NECESSARY IF MAILED IN U.S.A.

Fold on the two lines on reverse side, staple or tape, and mail

CUT ALONG LINE

FOLD

FIRST CLASS
Permit No. 6189
Houston, Texas

BUSINESS REPLY MAIL
No postage necessary if mailed in the United States

Postage will be paid by

TEXAS INSTRUMENTS INCORPORATED
DIGITAL SYSTEMS DIVISION
P.O. BOX 1444 HOUSTON, TEXAS 77001

ATTENTION: TECHNICAL PUBLICATIONS
M/S 770

FOLD

TABLE OF CONTENTS

Section		Page
I	GENERAL DESCRIPTION	
	1-1 Scope of Manual	1-1
	1-2 Equipment Description	1-1
	1-2.1 Model 732 KSR	1-1
	1-2.2 Model 733 KSR	1-1
	1-2.3 Model 733 ASR	1-1
	1-2.4 Model 732 ASR	1-3
	1-3 Optional Equipment	1-3
	1-3.1 Answer-Back Memory	1-3
	1-3.2 TTY Line Interface	1-3
	1-3.3 Modem Line Interface (Originate or Answer Mode)	1-5
	1-3.4 Full ASCII Keyboard	1-5
	1-3.5 Auto Device Control	1-5
	1-3.6 Single-Cassette ASR	1-5
	1-3.7 Automatic Search Control	1-5
	1-3.8 Remote Device Control	1-5
	1-3.9 1200-Baud Interface	1-6
	1-3.10 Dual Format	1-6
	1-3.11 Auto Answer Control (300b)	1-6
	1-3.12 ASR Footpedal	1-7
	1-3.13 Acoustic Coupler	1-7
	1-3.14 Calculator Numeric Cluster Keyboard	1-7
	1-4 Accessories	1-7
	1-4.1 Stand	1-7
II	EQUIPMENT INSTALLATION	
	2-1 General	2-1
	2-2 Dimensions	2-1
	2-3 Power Connections	2-1
	2-4 EIA Line Interface	2-1
	2-5 Paper Loading	2-1
	2-6 Strappable Options	2-1
	2-6.1 End-of-Line Alarm	2-1
	2-6.2 Playback Stop On Error	2-5
	2-6.3 Baudot Character Set	2-5
	2-6.4 ETX Record Initiate	2-5
	2-7 Options	2-5
	2-7.1 Answer-Back Memory	2-5
	2-7.2 Auto Device Control	2-7
	2-7.3 Modem Line Interface	2-7
	2-7.4 Current Loop Line Interface	2-7
	2-7.5 Uppercase/Lowercase Keyboard	2-7
	2-7.6 Dual Format PC Cards	2-10
	2-7.7 Automatic Search Control	2-13
	2-7.8 Remote Device Control	2-13
	2-7.9 1200-Baud Interface	2-13
	2-7.10 Auto Answer Control	2-13
	2-7.11 ASR Foot Pedal	2-16
	2-7.12 Acoustic Coupler	2-16
	2-7.13 Calculator Numeric Cluster Keyboard	2-20
III	THEORY OF OPERATION	
	3-1 General	3-1
	3-2 System Architecture	3-1
	3-3 Power Supply	3-1
	3-3.1 +33 Volt Unregulated Supply	3-11
	3-3.2 +5 Volt Regulated Supply	3-11
	3-3.3 +12 Volt Regulated Supply	3-13
	3-3.4 -12V Regulated Supply	3-13
	3-3.5 -5.6V Supply	3-13
	3-3.6 Power-On Reset Circuit	3-13
	3-4 Printer System	3-14
	3-4.1 Paper Drive Mechanism	3-14
	3-4.2 Printer Drivers	3-14
	3-4.3 Printer Control Logic	3-16
	3-4.4 Character Decoding, ASCII/Baudot	3-17
	3-4.5 Printhead	3-17
	3-5 Keyboards and Keyboard Interface	3-30
	3-5.1 Standard ASCII	3-30
	3-5.2 Uppercase/Lowercase ASCII Keyboard	3-34
	3-5.3 Baudot Keyboard	3-34
	3-5.4 Calculator Numeric Keyboard	3-34
	3-6 Transmit/Receive PC Cards (EIA Interface)	3-34
	3-6.1 ASCII Transmit/Receive PC Card (300 Baud Maximum)	3-34
	3-6.2 Baudot Transmit/Receive PC Card	3-50
	3-7 Terminal Control	3-54
	3-7.1 KSR Terminal Control	3-54
	3-7.2 ASR Terminal Control	3-54
	3-8 Cassette System	3-57
	3-8.1 Record Control	3-57
	3-8.2 Playback Control	3-66
	3-8.3 Motion Control	3-72
	3-8.4 Display Functions	3-75
	3-8.5 Cassette Transport	3-75
	3-9 Optional Devices	3-76
	3-9.1 Line Interface	3-76
	3-9.2 Answer-Back Memory	3-94
	3-9.3 Auto Device Control PC Card	3-97

TABLE OF CONTENTS (Continued)

Section		Page
	3-9.4 ASCII 1200-Baud Receiver PC Card	3-97
	3-9.5 ASCII 1200-Baud Transmitter PC Card	3-101
	3-9.6 Auto Answer Control	3-106
	3-9.7 Automatic Search Control	3-113
	3-9.8 Remote Device Control	3-118
	3-9.9 Acoustic Coupler	3-129
IV	BASIC EQUIPMENT PC CARDS AND FUNCTIONS	
	4-1 General	4-1
	4-2 KSR Unit	4-1
	4-2.1 Power Module Motherboard	4-1
	4-2.2 Regulator/Amplifier PC Card	4-1
	4-2.3 Control Regulator PC Card	4-1
	4-2.4 Printer Code PC Card (ASCII and Baudot)	4-1
	4-2.5 Printer Control	4-1
	4-2.6 Terminal Control	4-1
	4-2.7 Transmit/Receive (ASCII or Baudot Code)	4-1
	4-2.8 Printhead Interface	4-1
	4-3 ASR Module	4-1
	4-3.1 ASR Module Motherboard	4-1
	4-3.2 Display PC Card	4-1
	4-3.3 Motion Control	4-3
	4-3.4 Remote Cassette Control	4-3
	4-3.5 Playback Control	4-3
	4-3.6 Record Buffer Control	4-3
	4-3.7 Tape Read/Write	4-3
	4-3.8 Record Control	4-3
V	MAINTENANCE	
	5-1 Preventive Maintenance	5-1
	5-1.1 Printhead Cleaning	5-1
	5-1.2 Paper Drive Roller Cleaning	5-1
	5-1.3 Printhead Drive Mechanism Cleaning	5-1
	5-1.4 Cassette Transport Cleaning	5-3
	5-2 Troubleshooting	5-3
	5-3 Adjustments	5-3
	5-3.1 Print Contrast	5-3
	5-3.2 Modem Level Adjustment	5-3
	5-3.3 Printer Subsystem Adjustments	5-7
	5-4 Subassembly Removal and Replacement	5-7
	5-4.1 Keyboard	5-7
	5-4.2 Printhead	5-9
	5-4.3 Drive Assembly	5-9
	5-4.4 Printhead Interface PC Card	5-10
	5-4.5 Plug-in PC Cards (Lower Unit)	5-10
	5-4.6 Secondary Fuses	5-10
	5-4.7 AC Power Assembly	5-11
	5-4.8 Lower Unit Fan	5-11
	5-4.9 Power Module Assembly	5-13
	5-4.10 ASR Module Assembly (Upper Unit)	5-13
	5-4.11 Display Card Assembly	5-14
	5-4.12 Plug-in PC Cards (Upper Unit)	5-14
	5-4.13 Cassette Transport	5-14
	5-4.14 Upper Unit Fan	5-14
	5-4.15 Motherboard (Upper Unit)	5-15
APPENDIX A	SIGNATURE LIST	
APPENDIX B	ASSEMBLY DRAWINGS AND PARTS LISTS	
APPENDIX C	ELECTRICAL SCHEMATICS AND LOGIC DIAGRAMS	

LIST OF ILLUSTRATIONS

Figure No.		Page
1-2.1	Model 732 KSR (Baudot Code)	1-2
1-2.2	Model 733 KSR (ASCII Code)	1-2
1-2.3	Model 733 ASR (ASCII Code)	1-4
1-2.4	Model 732 ASR (Baudot Code)	1-4
1-3.1	Model 733 Acoustic Coupler Option Connector Block Diagram	1-8
1-4.1	Accessory Data Terminal Stand	1-7
2-1.1	PC Card Locations	2-2
2-2.1	Overall Dimensions (KSR/ASR)	2-3
2-3.1	115 Vac and 230 Vac Terminal Board Jumpers	2-3
2-4.1	Terminal External Connections	2-4
2-5.1	Paper Loading	2-4
2-7.1	Answer-Back Memory PC Card Component Locations	2-6
2-7.2	Teletypewriter Neutral Interface Wiring Diagram	2-12
2-7.3	Teletypewriter Polar Interface Wiring Diagram	2-12
2-7.4	Auto Answer Control Option Installation	2-15
2-7.5	Acoustic Coupler Panel Installation Details	2-17
2-7.6	Acoustic Coupler Panel Cable Routing	2-18
2-7.7	Tightening the Acoustic Coupler Panel Attach Screws	2-18
3-2.1	ASR Data Terminal System Architecture	3-2
3-2.2	Data Terminal Serial Data Bus Timing Diagram	3-3
3-2.3	Terminal Control Block Diagram	3-4
3-2.4	Timing Diagram, Typical Data Transmission via Data Bus	3-5
3-2.5	Terminal Control Printer, and Keyboard Block Diagram	3-6
3-2.6	Terminal Control, Receiver, Transmitter, and Line Interface (up to 300 baud)	3-7
3-2.7	Auxiliary 1 or 2 and Terminal Control	3-8
3-2.8	Terminal Control, Playback, Record, and Display Panel	3-9
3-3.1	Data Terminal Power Supply Block Diagram	3-10
3-3.2	Waveform, +5 Volts at No Load	3-12
3-3.3	Waveform, +5 Volts at 5-Amperes Load	3-12
3-3.4	Waveform, +5 Volts at 10-Amperes Load	3-12
3-3.5	Waveform, +5 Volts at Current Limit	3-12
3-3.6	Power Reset (PWRRST–) Sequence Waveform	3-13
3-4.1	Printer System Block Diagram	3-15
3-4.2	Printer Control Timing Synchronization	3-19
3-4.3	Printer Control Timing Printing in Columns 1, 4, etc.	3-20
3-4.4	Printer Control Normal Carriage Return Timing Diagram	3-21
3-4.5	Printer Control Timing, Backspace from Columns 4, 8, etc.	3-22
3-4.6	Printer Control, Line Feed Timing Diagram (Double Line Spacing)	3-23
3-4.7	Printer Decode Block Diagram	3-24
3-4.8	Printer Control Character Decoding Flow Chart	3-25
3-4.9	Printer Control Character Decoding Timing Diagram	3-26
3-4.10	Printhead Buffer Clear (PHBFRCLR) Timing Diagram	3-29
3-5.1	Keyboard Interface Block Diagram	3-31
3-5.2	Keyboard Interface State, Flow Diagram	3-32
3-5.3	Timing Diagram Keyboard Interface	3-33
3-5.4	Keyboard Strobe Pulse	3-30
3-5.5	Standard ASCII Keyboard Layout and Symbolization	3-35
3-5.6	Unshifted Characters, Standard ASCII Keyboard	3-35
3-5.7	Shifted Characters, Standard ASCII Keyboard	3-36
3-5.8	Control Characters, Standard ASCII Keyboard	3-36
3-5.9	Shift and Control Characters, Standard ASCII Keyboard	3-37
3-5.10	Full ASCII Keyboard Symbolization	3-37
3-5.11	Lowercase Characters, Full ASCII Keyboard	3-38
3-5.12	Shifted Characters, Full ASCII Keyboard	3-38
3-5.13	Control Characters, Full ASCII Keyboard	3-39
3-5.14	Baudot Keyboard	3-40
3-5.15	Baudot Letter Mode Keyboard Codes	3-40

LIST OF ILLUSTRATIONS (Continued)

Figure No.		Page
3-5.16	Optional Limited ASCII with Calculator Cluster Keyboard Layout and Symbolization	3-41
3-5.17	Unshifted Characters	3-41
3-5.18	Shifted Characters	3-42
3-5.19	Control Characters	3-42
3-5.20	Calculator Numeric Characters	3-43
3-6.1	ASCII/Baudot Transmit/Receive PC Card Block Diagram	3-44
3-6.2	ASCII Line Data Format	3-46
3-6.3	ASCII Serial Receiver Timing Diagram	3-47
3-6.4	ASCII Serial Receiver Timing Diagram	3-48
3-6.5	ASCII System Clocks Block Diagram	3-49
3-6.6	Baudot Line Data Format	3-51
3-6.7	Baudot Serial Transmitter Timing Diagram	3-52
3-6.8	Baudot Serial Receiver Timing Diagram	3-53
3-6.9	Baudot System Clocks Block Diagram	3-55
3-7.1	Terminal Control System Timing Diagram	3-56
3-7.2	Terminal Control Block Diagram	3-57
3-8.1	Cassette Subsystem Block Diagram	3-58
3-8.2	Record Control Block Diagram	3-59
3-8.3	Record Control Flow Diagram	3-60
3-8.4	Record Memory Timing Diagram	3-62
3-8.5	Tape Write Controller Flow Diagram	3-63
3-8.6	Tape Write Controller Timing Diagram	3-64
3-8.7	Playback Control Block Diagram	3-65
3-8.8	Playback Control Flow Chart	3-67
3-8.9	Tape Read Controller Timing Diagram	3-68
3-8.10	Block of Data on Tape	3-69
3-8.11	Phase-Encoded (PE) Data Timing Diagram	3-69
3-8.12	Flow Diagram of Functions Performed by the Remote Cassette Control PC Card	3-71
3-8.13	Tape Cassette Motion Control Flow Diagram	3-73
3-8.14	ASR Control and Display Panel	3-74
3-8.15	Read/Write Electronics Block Diagram	3-75
3-8.16	Motion Control and Deck Status Block Diagram	3-77
3-8.17	Timing for a Typical Write/ Read-Reverse-Forward Sequence	3-78
3-8.18	Timing for a Typical Fast-Forward/Fast-Reverse Sequence	3-79
3-9.1	Originate-Mode (TL) Modem Functional Block Diagram	3-82
3-9.2	Answer Mode (TH) Modem Functional Block Diagram	3-89
3-9.3	Answer-Back Memory Diode Matrix	3-95
3-9.4	Answer-Back Memory Timing Diagram	3-98
3-9.5	Answer-Back Memory Flow Chart	3-99
3-9.6	1200-Baud Transmitter PC Card Block Diagram	3-104
3-9.7	1200-Baud Transmitter PC Card Input Section Timing Diagram	3-105
3-9.8	Auto Answer Control, Functional Flow Diagram	3-113
3-9.9	Auto Search Control Simplified Flow Chart	3-114
3-9.10	Auto Search Control Data Timing	3-115
3-9.11	Auto Search Control Functional Flow Diagram	3-116
3-9.12	Auto Search Control Block Diagram	3-124
3-9.13	Remote Device Control Timing Diagram	3-127
4-1	PC Card Locations	4-2
5-1.1	Printhead Drive Mechanism Cleaning	5-2
5-1.2	Tape Cassette Transport Cleaning Areas	5-5
5-4.1	Subassembly Removal and Replacement Information	5-8
5-4.2	Data Terminal (Rear View)	5-12
5-4.3	ASR Upper Unit Removal and Replacement (Front View)	5-15

LIST OF TABLES

Table No.		Page
2-4.1	EIA Interface Cable Pin Functions (Cable 959372-0001)	2-5
2-6.1	PC Card Connections for Code and Character Set	2-7
2-7.1	Answer-Back Memory PC Card Switch Options	2-8
2-7.2(A)	Auto Device Controller Enabling Options (For Part No. 971481)	2-9
2-7.2(B)	Auto Device Controller (Earlier Model) Enabling Options (Part No. 960891)	2-9
2-7.3	Phone Line (Modem) Cable Pin Functions (Cable 959383-0001)	2-10
2-7.4	Current Loop (TTY) Interface Cable Pin Functions (Cable 959284-0001)	2-10
2-7.5	Dual Format PC Cards Strappable Option Enables	2-11
2-7.6	300-Baud Auto Answer Control Pin Assignments and Signal Names for CBS-DAA Series Data Couplers	2-16
2-7.7	Pin Assignment for Optional Acoustic Coupler Jumper Connector	2-19
2-7.8	Pin Assignments for Optional Acoustic Coupler "Y" Connector	2-19
3-4.1	Printer Control Read Only Memory Input/Output	3-18
3-4.2	ASCII Code System and Character Set	3-27
3-4.3	Baudot Code System and Character Set	3-28
3-5.1	Standard Keyboard Connector Pin Assignments	3-34
3-5.2	Optional Numeric Keyboard Connector Pin Assignments	3-34
3-6.1	Dual Format ASCII Transmit/Receive Transmitter Data Format	3-46
3-9.1	Answer-Back Memory PC Card Switch Options	3-96
3-9.2	Answer-Back Memory State Equations	3-97
3-9.3	Auto Device Control Enabling Options (for Part No. 971481)	3-101
3-9.4	Auto Device Controller (Earlier Model Enabling Options (Part No. 960891)	3-101
3-9.5	1200 Baud, EIA Interface Cable, Pin Functions	3-103
3-9.6	Answer-Back Memory Trigger-Delay Chart, Resistor Options	3-107
3-9.7	Auto Answer Control Interface Selection Chart, Resistor Options	3-107
3-9.8	Automatic Disconnect and Automatic Answer-Back Memory Triggering, Resistor Options	3-110
3-9.9	State Equations for Auto Answer Control	3-110
3-9.10	Auto Answer Control Pin Assignments with Bell 103 Data Set	3-111
3-9.11	Auto Control Pin Assignments with Bell Type-CBS Data Access Arrangement	3-111
3-9.12	RDC PC Card Switch S2 Options	3-121
3-9.13	Remote Device Control Code Bits for ASR	3-121
3-9.14	Remote Device Control Status Codes and Characters	3-126
5-1	Failure Analysis Chart, ASR and KSR Models	5-4
5-2	Failure Analysis Chart, ASR Models Only	5-5

SECTION I

GENERAL DESCRIPTION

1-1 SCOPE OF MANUAL.

This manual describes preventive and corrective maintenance procedures for the Silent 700® KSR/ASR Electronic Data Terminals manufactured by the Digital Systems Division of Texas Instruments Incorporated. Information is presented herein for maintaining and servicing the following Silent 700 models: 732 KSR, 732 ASR, 733 KSR, and 733 ASR.

The maintenance information in this manual is intended to help service personnel solve minor maintenance problems in the field and assist analysis of major troubles at regional TI service centers. A general description of each model and module of the 732/733 KSR/ASR Electronic Data Terminal series is included in this manual along with necessary interfacing information. A general theory of operation for each terminal function (the PC cards perform more than one function) and troubleshooting guide are also included herein. A complete parts list and related mechanical and electrical drawings are included in the appendixes.

1-2 EQUIPMENT DESCRIPTION.

Each Data Terminal is a self-contained local-controlled and/or remote-controlled electronic data terminal designed for use in a wide variety of telecommunications systems. Silent electronic printing is achieved using a dot matrix on a monolithic, solid-state printhead which prints characters across the page. The matrix is composed of separate solid-state heating elements, each electronically controlled. A voltage is applied to the proper character element, transferring thermal energy to the heat-sensitive paper, thus creating a visible image.

The Silent 700 KSR/ASR Electronic Data Terminals can be configured to meet a variety of applications. This versatility is accomplished using modular design which permits performance variation by adding the ASR Module Assembly (top unit) and by inserting an appropriate printed circuit (PC) card and keyboard into the basic terminal subassembly. The basic terminal models available are the 732 KSR, 733 KSR, 732 ASR, and 733 ASR.

1-2.1 MODEL 732 KSR. The model 732 KSR (see Figure 1-2.1) is a Baudot-coded keyboard send/receive data terminal, similar in function to conventional tape punch data terminals. The TI 732 KSR is capable of transmitting, receiving, and printing the Baudot code and character set at switch-selectable speeds of 50, 75, or 100 baud via a standard EIA line interface.

The following options are available with the model 732 KSR:

a. Answer-back memory

b. Teletype (TTY) interface.

1-2.2 MODEL 733 KSR. The model 733 KSR (see Figure 1-2.2) is an ASCII-coded, keyboard send/receive data terminal, similar in function to conventional tape punch data terminals. The TI 733 KSR is capable of transmitting, receiving, and printing the ASCII code and character set at switch-selectable speeds of 10, 15, or 30 characters per second (CPS) via a standard EIA line interface.

The following options are available with the model 733 KSR:

a. Answer-back memory

b. Auto answer control

c. TTY line interface series

d. Automatic device control (line-disconnect function)

e. Modem line interface

f. Full (upper and lowercase) ASCII keyboard

g. Acoustic coupler.

1-2.3 MODEL 733 ASR. The model 733 ASR (see Figure 1-2.3) is an ASCII-coded automatic send/receive data terminal, similar in function to conventional tape punch data terminals. The TI 733 ASR is capable of transmitting, receiving, printing, playing back (from tape), and recording on tape the ASCII code and character set at switch-selectable speeds of 10, 15, or 30 characters per

FIGURE 1-2.1. MODEL 732 KSR (BAUDOT CODE)

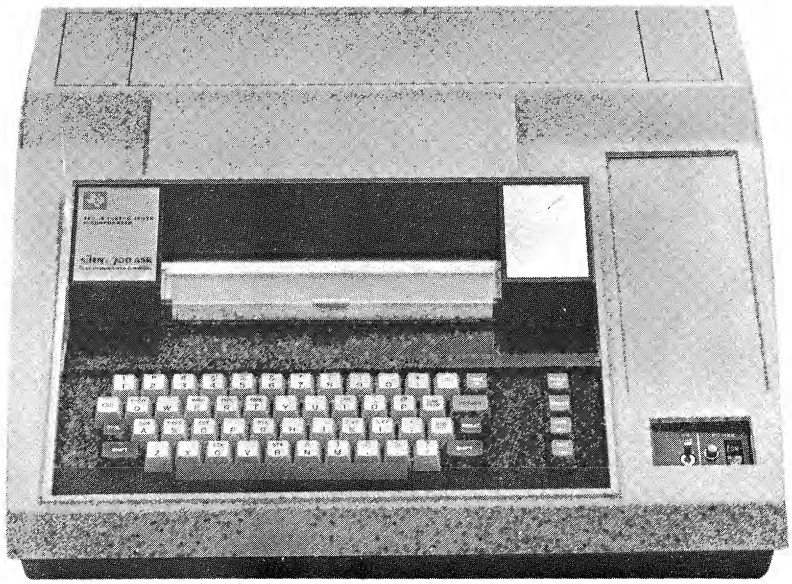

FIGURE 1-2.2. MODEL 733 KSR (ASCII CODE)

second (CPS) via a standard EIA line interface. Functions such as tape edit or high speed tape duplication are also possible in the off-line (local) mode.

The following options are available with the model 733 ASR:

a. Answer-back memory

b. Auto answer control

c. TTY line interface series

d. Modem line interface

e. Full ASCII keybaord

f. Automatic search control

g. Automatic device control

h. Remote device control

i. Single - cassette ASR.

j. 1200 Baud

k. Footpedal for the tape playback

l. Acoustic coupler.

1-2.4 MODEL 732 ASR. The Model 732 ASR (see Figure 1-2.4) is a Baudot-coded, automatic send/receive data terminal, similar in function to conventional tape punch data terminals. The 732 ASR is capable of transmitting, receiving, printing, playing back from tape and recording on tape the Baudot code and character set at switch-selectable speeds of 50, 75, or 100 baud via a standard EIA line interface. Functions such as tape edit or high-speed tape duplication are also possible in the off-line (local) mode.

The following options are available with the model 732 ASR:

a. Answer-back memory

b. TTY line interface series

c. Single-cassette ASR.

1-2.5 MODEL 732 RECEIVE ONLY (RO). The Model 732 RO Data Terminal is a Baudot-code, receive-only data terminal. The 732 RO is capable of receiving and printing the Baudot code and character set at switch-selectable data rates of 50, 75, and 100 baud via a standard EIA line interface. The Model 732 is functionally, physically, and operationally equivalent to the Model 732 KSR, except the RO Data Terminal has no keyboard, no ON/OFF LINE switch, and the paper advance switch is located adjacent to the ON/OFF LINE switch.

The following options are available for the 732 RO:

a. Answer-back memory

b. TTY line interface series.

1-2.6 MODEL 733 RECEIVE ONLY (RO). The Model 733 RO is an ASCII-coded receive-only data terminal. The TI 733 RO is capable of receiving and printing the ASCII code and character set at switch-selectable data rates of 10, 15, and 30 characters per second (CPS) via a standard EIA line interface. The Model 733 is functionally, physically, and operationally equivalent to the Model 733 KSR, except the RO has no keyboard, no ON/OFF LINE switch, and the paper advance switch is located adjacent to the ON/OFF LINE switch.

The following options are available for the Model 733 RO:

a. Answer-back memory

b. Modem line interface (answer-mode only)

c. Automatic answer control

d. Automatic device control (line-disconnect function)

e. TTY line interface series.

f. Acoustic Coupler.

1-3 OPTIONAL EQUIPMENT.

1-3.1 ANSWER-BACK MEMORY. The Answer-Back Memory provides up to 21 field-programmable, nonvolatile characters. The Answer-Back Memory is activated by the USASCII ENQ character or by depressing the HERE IS key on the keyboard. Printing or recording of the memory contents is a switch-selectable option.

FIGURE 1-2.3. MODEL 733 ASR (ASCII CODE)

FIGURE 1-2.4. MODEL 732 ASR (BAUDOT CODE)

1-3.2 TTY LINE INTERFACE. The TTY Line Interface replaces the standard EIA interface.

1-3.2.1 Neutral Interface. TTY neutral interface signaling is accomplished by opening and closing the circuit presented to the terminal I/O connector. Nominal operating current is field-settable to either 60 mA or 20 mA.

1-3.2.2 Polar Interface. TTY polar interface signaling is accomplished by alternately opening one circuit and closing the other circuit presented to the terminal I/O connector. A positive current in the external circuit represents a MARK and a negative current represents a SPACE.

1-3.2.3 Computer Line Interface. Designed for computer use, with this interface signaling is accomplished by opening and closing the circuit presented to the I/O connector. Nominal operating current is 13 mA.

1-3.3 MODEM LINE INTERFACE (ORIGINATE OR ANSWER MODE). The Modem Line Interface, which replaces the standard EIA Interface, is a low-speed modem conforming to the requirements of the Bell Data Access Arrangement central data terminal. It operates asynchronously up to a maximum speed of 300 baud in full-or half-duplex over a two-wire voice-grade line. Signaling is accomplished by frequency shift keying (FSK).

1-3.4 FULL ASCII KEYBOARD. The Full ASCII Keyboard provides transmission of both uppercase and lowercase characters from the keyboard.

1-3.5 AUTOMATIC DEVICE CONTROL. When the Automatic Device Control characters DC1, DC2 DC3 or DC4 are received from the line or generated by the terminal, the record and playback cassette units are switched on or off as shown below:

DC1 (X-ON)	Playback ON
DC2 (TAPE)	Record ON
DC3 (X-OFF)	Playback OFF
DC4 (~~TAPE~~)	Record OFF

Activation by these characters in either transmit, receive, or local modes is a selectable option. In the case of the playback cassette reading DC3, one character after DC3 will be played back before the playback cassette is switched off.

1-3.6 SINGLE-CASSETTE ASR. The ASR terminal is optionally available without cassette-2 and associated controls. Cassette-1 retains its controls, indicators, and capabilities. Terminal capabilities requiring simultaneous operation of two cassettes are not available with the single-cassette system.

1-3.7 AUTOMATIC SEARCH CONTROL. The optional Automatic Search Control (ASC) provides the ASR with capability to search a recorded tape cassette at high speed for a predetermined record. The operator or remote device (if used in conjunction with the optional Remote Device Control) enters an activate code through the ASR keyboard. In the case of a remote device, the activate code is transmitted on the line. The ASC answers (local mode only) with a line feed and a carriage return, after which the operator or remote device enters into the ASC memory from one to 16 printable USASCII characters which the ASC uses to identify the searched-for record. The operator then activates the appropriate tape cassette PLAYBACK CONTROL switch to initiate the search, or the remote device issues the appropriate code. The ASC searches the tape cassette at speeds up to 324 characters per second (3.7 blocks per second). Upon locating the desired data blocks, the ASC stops the tape and causes a paper advance (local mode only). The operator or remote device then may initiate a local or remote printout or recording of the desired data.

The Automatic Search Control consists of the ASC printed-circuit card (card slot A7), a motherboard-access PC card (card slot A6), and a top access connector which connects the two PC cards. When used with the optional Automatic Device Control (TI Part No. 971481) or the optional Remote Device Control, the motherboard-access card is not needed.

The ASC receives most operating signals from the motherboard-access PC card or the Automatic Device Control or the Remote Device Control, depending on which one of the three PC cards are installed.

1-3.8 REMOTE DEVICE CONTROL (ASR MODEL ONLY). The Remote Device Control option allows a remote device to change the functional operating modes of the 733 ASR Data Terminal via data received from the communication line. The following functions may be controlled through this option:

1. Playback ON
2. Playback OFF
3. Record ON
4. Record OFF
5. Automatic disconnect from the phone line when used in conjunction with the Auto Answer Control option (EOT)

6. Rewind cassette 1

7. Rewind cassette 2

8. Load/FF cassette 1

9. Load/FF cassette 2

10. Cassette 1 in record mode (cassette 2 in playback mode if dual cassette model)

11. Cassette 1 in playback mode (cassette 2 in record mode if dual cassette model)

12. Block forward

13. Block reverse

14. Printer ON

15. Printer OFF

16. Automatic Device Control ON (items 1 - 4 above) on received data

17. Automatic Device Control OFF (items 1 - 4 above) on received data

18. Request status information

19. Automatic Search Control cancel (when used in conjunction with the ASC option)

20. 1200-baud print local (when used in conjunction with the planned 1200 baud auto answer options).

21. Footpedal option operation of the playback-on function.

In addition, when status information is requested, the status of the cassettes, record, playback, and printer is transmitted by the terminal via a single ASCII character.

These functions provide the following typical applications:

1. Data collection from an unattended terminal

2. Data distribution to an unattended terminal

3. Remote record search when used in conjunction with the Automatic Search Control option

4. Data distribution to any unattended terminal at 1200-baud line speed when used in conjunction with the 1200 baud auto answer option.

1-3.9 **1200-BAUD INTERFACE.** The 1200-Baud Interface option allows the 733 ASR to transmit and receive data at rates of 10, 15, 30, and 120 characters per second (110, 150, 300, and 1200 baud, respectively). The data set interface section of the 1200-Baud option generates and accepts the necessary signals to operate with Bell System Models 202C and 202D (or equivalent) data sets.

1-3.10 DUAL FORMAT. The Dual Format option enables the Model 733 ASR to transmit and receive either 7 bits of data (standard ASCII configuration) or 8 bits of data (binary configuration).

The Dual Format option consists of four PC cards which provide an additional strappable option to enable the ETX control character to initiate the recording of a block of data (only when operating in the standard ASCII configuration and the TAPE FORMAT switch is in the CONT position).

1-3.11 AUTO ANSWER CONTROL (300 BAUD). The Auto Answer Control option (TI Part No. 960984) provides a 300-baud Model 733 Data Terminal the capability to automatically answer a call through the Bell System's direct distance dialing (DDD) network. Two versions of the Auto Answer Control option are available: one interfaces with a Bell CBS data access arrangement (DAA) or equivalent; the other version interfaces with a Bell 103A data set or equivalent with auto answer control.

TI recommends using the Auto Answer Control option in conjunction with both the Answer-Back Memory and the Remote Device Control options or with the Auto Device Control option.

The Auto Answer Control consists of a 6-foot EIA or modem cable assembly, a PC card, and a display panel.

1-3.12 ASR FOOTPEDAL.

NOTE

The data terminal must be equipped with the optional Remote Device Control (RDC) to enable use of the Footpedal.

Available for the Model 733 ASR Data Terminal is an optional Footpedal (TI Part No. 973866) to permit convenient remote triggering of ASR cassette tape

playback. The Footpedal is particularly useful to control playback of format tapes. The ASR Footpedal option consists of:

1. A footswitch pedal with an integral debounce circuit mounted on a PC card

2. A 7-foot heavy-duty shielded cable

3. A connector to mate the footpedal to the J2 connector at the rear of the 733 ASR Data Terminal.

1-3.13 ACOUSTIC COUPLER. The optional Acoustic Coupler (TI Part No. 969619) is available for the Models 733 ASR, KSR, and Receive-Only Data Terminals. The Acoustic Coupler equips the data terminal to communicate over voice-grade telephone networks at data rates up to 300 baud in full or half duplex mode. The Acoustic Coupler operates over any standard Western Electric 500-series type telephone (or equivalent). The Acoustic Coupler is typically used to gain direct access to a computer timeshare system. In operation, the telephone handset is placed in the Acoustic Coupler muffs and the appropriate connecting number is dialed on the telephone.

The Acoustic Coupler option consists of

1. A telephone handset receiver panel with muffs and interconnecting wiring

2. The electronic interface, mounted on a single PC card which plugs into the PC card rack.

3. A connector jumper which plugs into the communication interface connector (J1) at the rear of the data terminal. Figure 1-3.1a is a block diagram of a typical Acoustic Coupler application.

4. An optional "Y" connector enables use of the data terminal with both the Acoustic Coupler and a variety of other data sources, as shown in Figure 1-3.1b.

1.3.14 CALCULATOR NUMERIC CLUSTER KEYBOARD. The calculator numeric cluster keyboard provides a calculator numeric cluster in addition to the standard numeric form.

1-4 ACCESSORIES.

1-4.1 STAND. A terminal stand is available which securely supports the terminal. The lower row of key tops are 29 inches from the floor. The stand provides at least 24 inches of leg room from the bottom of the stand to the floor and at least 14 inches of leg room from the front edge of the terminal stand to the back of the stand. The stand weighs approximately 45 pounds.

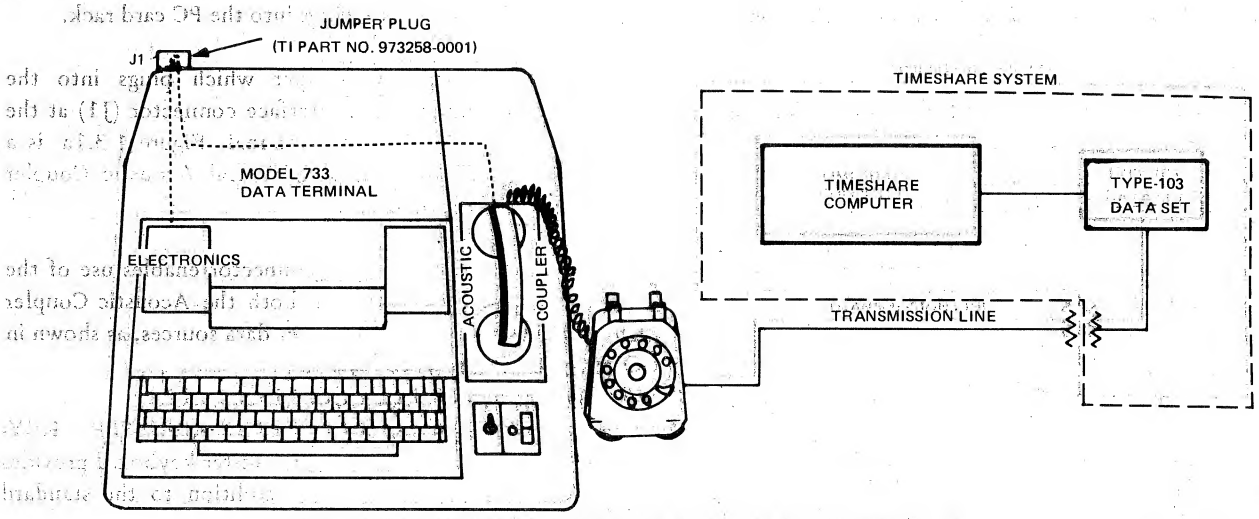

a. STANDARD (THROUGH) JUMPER CONNECTOR FOR ACOUSTIC COUPLER OPERATION

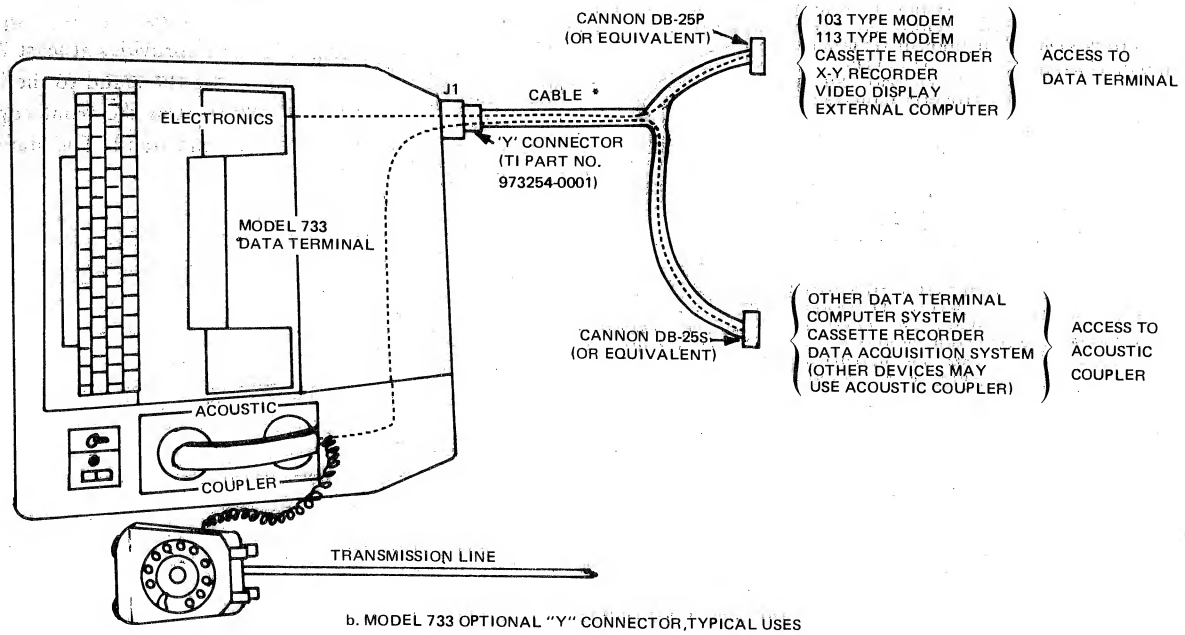

b. MODEL 733 OPTIONAL "Y" CONNECTOR,TYPICAL USES

A 0000154

FIGURE 1-3.1. MODEL 733 ACOUSTIC COUPLER OPTION CONNECTOR BLOCK DIAGRAM

SECTION II

EQUIPMENT INSTALLATION

2-1 GENERAL.

The Silent 700® Electronic Data Terminals are self-contained, requiring no auxiliary equipment for standard data terminal operation.

CAUTION

After unpacking, visually inspect the data terminal before applying power. Check for obvious shipping damage. Open the top cover and remove the PC card rack cover. Check for foreign objects. Ensure that all PC cards (see Figure 2-1.1) are tightly plugged into their sockets and that all connectors are plugged into the motherboard. Ascertain that the keyboard cable is connected. Replace the PC card rack cover (be sure the three tabs at the rear are inserted into their mating slots at the rear of the PC card rack) and close the top cover. Check that all keyboard keys operate freely. Do not operate the printer without paper on the platen (see Paragraph 2-5).

2-2 DIMENSIONS.

The terminal should be located in an area where its air inlets and outlets are unobstructed. Dimensions are shown in Figure 2-2.1.

2-3 POWER CONNECTIONS.

The normal power connection is 115 Vac, 50/60 Hz, three wire. To use optional 230 Vac, 50/60 Hz, power, the terminal must be rewired as follows: (1) remove the card rack cover and power assembly cover (Figure 2-1.1); (2) remove the jumpers between TB1-2 and TB1-3 and between TB1-5 and TB1-6; (3) install a jumper between TB1-3 and TB1-5 (see Figure 2-3.1). The power cord plug must be changed; the new cord must meet UL and CSA standards. Change fuse F1 to a 1.5A, 250V Slo Blo.

2-4 EIA LINE INTERFACE.

The EIA line connection located at the rear of the data terminal is an edge connector (see Figure 2-4.1).

A data set cable (Part No. 959372-0001) connects the data terminal to the external data set. A standard RS232C compatible 25-pin connector is provided at the end of the 6-foot cable. For pin assignments see Table 2-4.1.

CAUTION

When attaching the cable connector screws to the data terminal, do not tighten the screws excessively: the connector ears may break.

2-5 PAPER LOADING.

CAUTION

The printer should never be operated without paper on the platen (drive roller); damage to both platen and printhead could result.

The data terminal must be loaded with paper before applying power. Load the paper as follows:

> **IMPORTANT NOTE**
> The warranty and/or service contract on the thermal printhead is subject to nullification if the thermal printing paper used in the Silent 700 Data Terminal does not meet TI Specification 213714.

a. Raise the terminal cover and rotate the window backwards (see Figure 2-5.1).

b. Place a fresh roll of paper on the supply hubs, ascertaining that the roll can rotate freely.

c. Thread paper between the paper chute and the drive roller as shown in Figure 2-5.1. Be sure paper is centered in the paper chute.

d. Lower the window.

e. Set the POWER switch ON and depress the

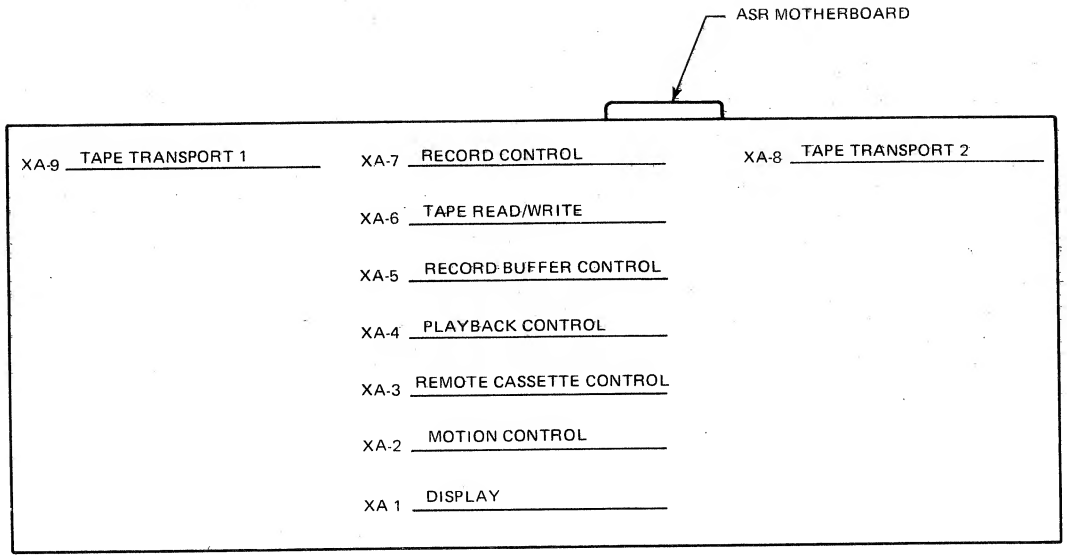

ASR MODULE ASSEMBLY (TOP UNIT) PC CARD LOCATIONS

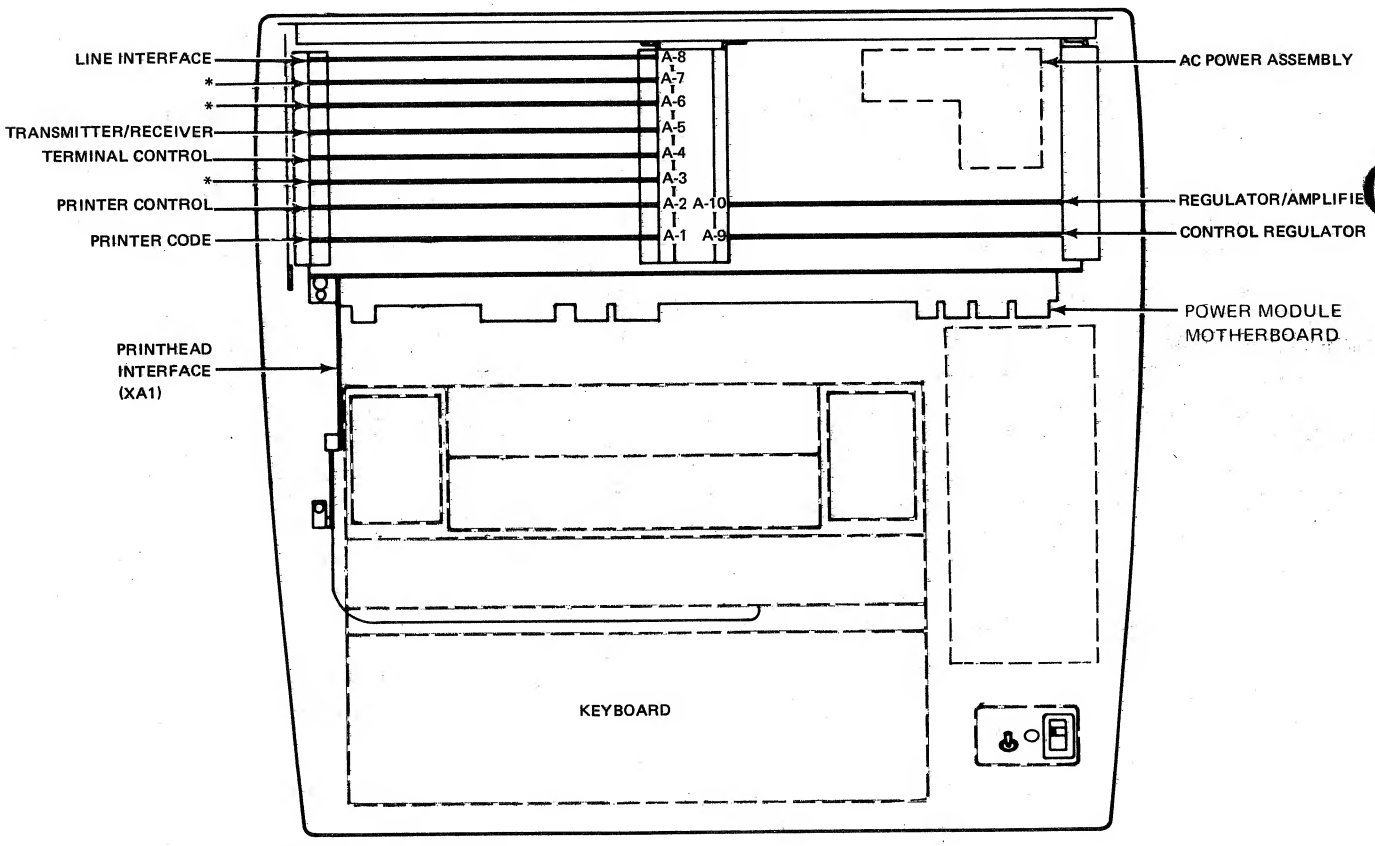

*RESERVED FOR OPTIONAL DEVICES

KSR (LOWER UNIT) PC CARD LOCATIONS

FIGURE 2-1.1. PC CARD LOCATIONS

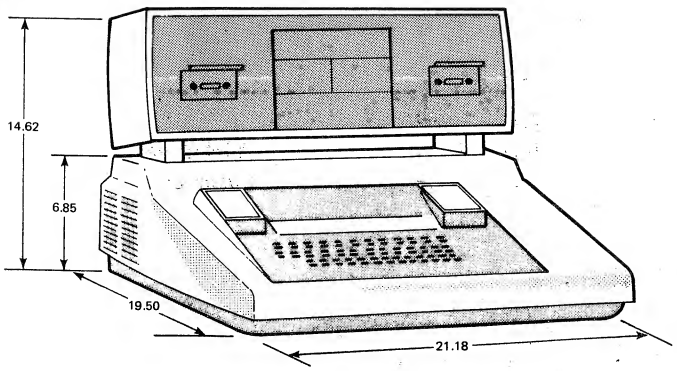

(dimensions in inches)

FIGURE 2-2.1. OVERALL DIMENSIONS (ASR/KSR)

PAPER ADV key. Make sure paper is feeding smooth and straight.

f. Close the data terminal cover, ascertaining that paper is fed through the slot in the cover.

2-6 STRAPPABLE OPTIONS.

2-6.1 END-OF-LINE ALARM. The end-of-line alarm can be prevented from sounding automatically by removing R20 (10 ohms) by hand from connectors J1 and J2 on the Printer Control PC card. If this feature is wanted, hand insert the 10-ohm resistor (R20) between J1 and J2 on the Printer Control card (red tabbed card in slot A2 of the KSR card rack). Removal of R20 will not inhibit the alarm from sounding upon receipt of the ASCII BEL character.

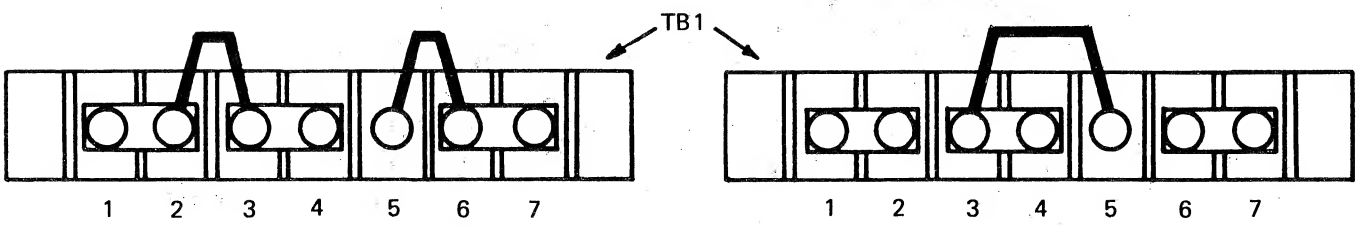

(a) 115V OPERATION

(b) 230V OPERATION

NOTE: TB1 is located under the Power Assembly Cover (shown in Figure 2-1.1). Fuse F1 (at rear of KSR near power cord exit) must be changed to a Slo-Blo 250V, 1.5A fuse for 230V operation.

FIGURE 2-3.1. 115 Vac AND 230 Vac TERMINAL BOARD JUMPERS

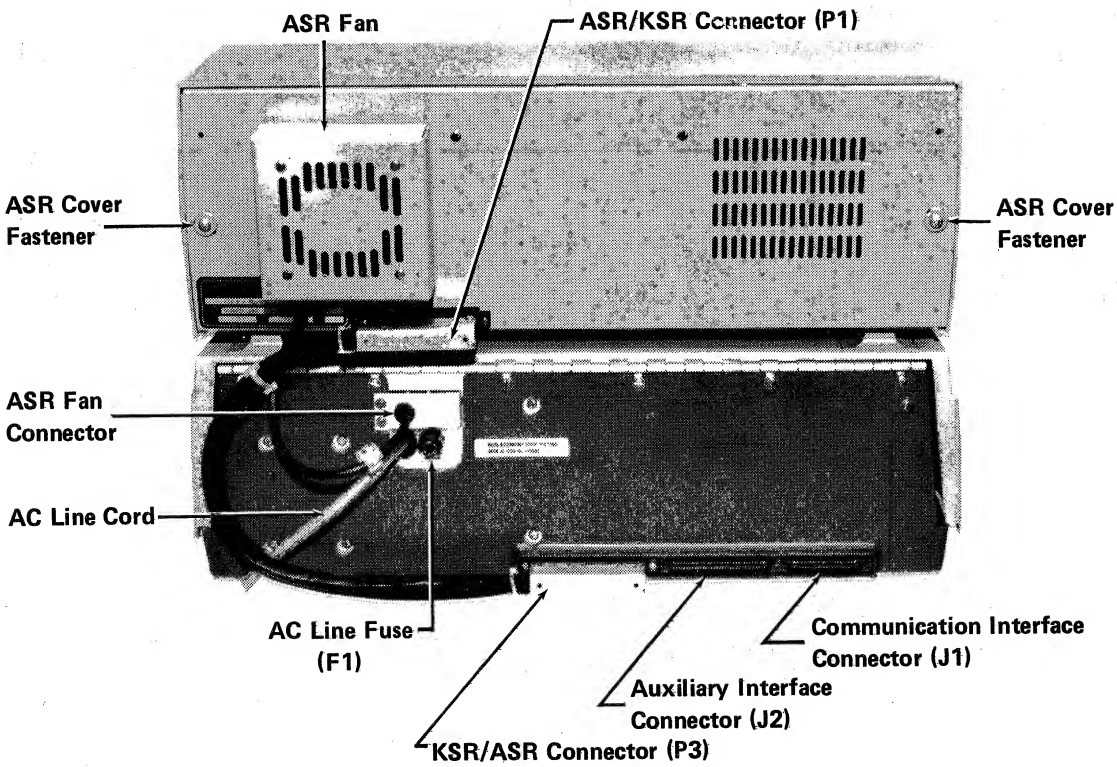

FIGURE 2-4.1. TERMINAL EXTERNAL CONNECTIONS

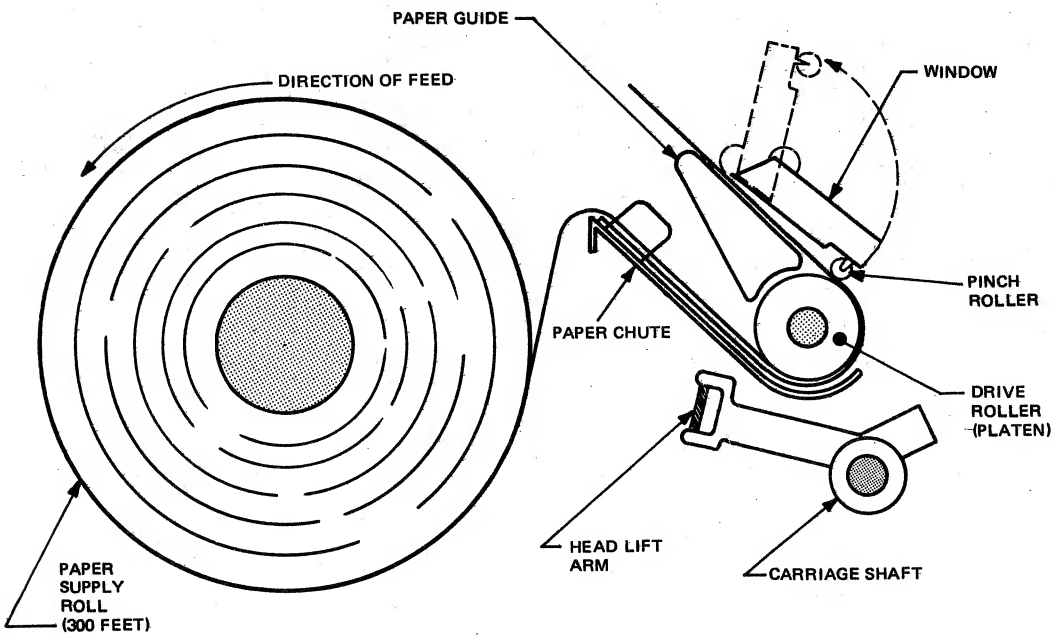

FIGURE 2-5.1. PAPER LOADING

TABLE 2-4.1. **EIA INTERFACE CABLE PIN FUNCTIONS[4]**
(CABLE 959372-0001)

Connector Pin Numbers		Pin Function
Terminal	Data Set	
6	20	Data Terminal Ready[1]
7	7	Signal Ground
8	5	Clear to Send[2]
9	6	Data Set Ready[3]
10	3	Received Data
A	1	Protective Ground
F	4	Request to Send[1]
H	2	Transmitted Data
K	8	Data Carrier Detect[5]

NOTES:
[1] Held to an ON condition by data terminal.
[2] Held to an ON condition by data set during transmission; required by terminal for transmission.
[3] Held to an ON condition when data set is operative; required for terminal operation.
[4] All are used only with external modem.
[5] Held to an ON condition by modem when carrier is received; required by terminal for data reception.

2-6.2 **PLAYBACK STOP ON ERROR.** This option is implemented by a strappable resistor or a pencil switch; depending on which version of the Playback Control PC card is installed in slot XA-4 of the ASR upper unit.

2-6.2.1 **Standard Playback Control (PC Card 960905)*.** Upon detecting a read error when reading from the tape, the Playback Controller will automatically stop if resistor R1 (10 ohms) is connected between J3 and J4 on the Playback Control card (slot 4 in the upper ASR unit). If R1 is connected between J1 and J2 on this same card, the controller will not stop upon detecting a read error; instead, it will transmit the erroneous block to the terminal and continue reading tape (if in continuous playback mode). This resistor is easily pulled out of J3/J4 and inserted in J1/J2, or vice versa, by hand (no tools necessary).

2-6.2.2 **Optional Dual-Format Playback Control.** The stop-on-error option on the Dual-Format Playback Control (PC Card 969453*) is enabled by setting switch S1-4 to ON. In this position the controller will automatically stop tape playback upon detecting a read error. With switch S1-4 in the OFF position, the erroneous block of data will be transmitted to the line.

The stop-on-error option on the Dual-Format Playback Control (PC Card 981319) is enabled by installing R4 (10 ohms) between J1 and J2.

2-6.3 **BAUDOT CHARACTER SET.** Code and character set may be selected on the Printer Code PC card (slot 1 in KSR unit) by installing Z23, R46, R47, R48; R49, and R53 according to Table 2-6.1

2-6.4 **ETX RECORD INITIATE [733 MODELS WITH DUAL-FORMAT RECORD BUFFER CONTROL (PC CARD 962285) ONLY].** If recording in the CONTinuous tape format, upon receiving the ASCII end-of-text (ETX) control character, the recording of a block of data will be initiated. This permits the ETX control character to perform the function of a carriage return. To enable this strappable option, remove R8 (10 ohms) from between J3 and J4 on the Dual-Format Record Buffer PC card (slot XA-5, ASR upper unit). *Reinstall* R8 as R13 between J1 and J2.

NOTE
The ETX option cannot be used with binary option. (R9 must not be installed.)

2-7 OPTIONS.

2-7.1 **ANSWER-BACK MEMORY.** To gain this option, install the Answer-Back Memory PC card (Part No. 960881-0001) in card slot A3. To program the Answer-Back Memory, use the following procedure:

a. For each character to be transmitted, remove the corresponding diode from rows CR148 through CR165 of the Answer-Back Memory PC card shown in Figure 2-7.1. These diodes are located on the left-hand side of the board.

b. To encode each character, remove diodes to transmit a ZERO (space), or leave in diodes to transmit a ONE (mark) in each bit position. The first bits for each character are located in the rightmost column of diodes; bit 2 is the

*This PC card is obsolete.

next column left, etc. The first character is encoded in the first row of diodes; hence, CR64 corresponds to bit 4 of character 1.

Several switchable options are incorporated into the Answer-Back Memory PC card. Table 2-7.1 defines each

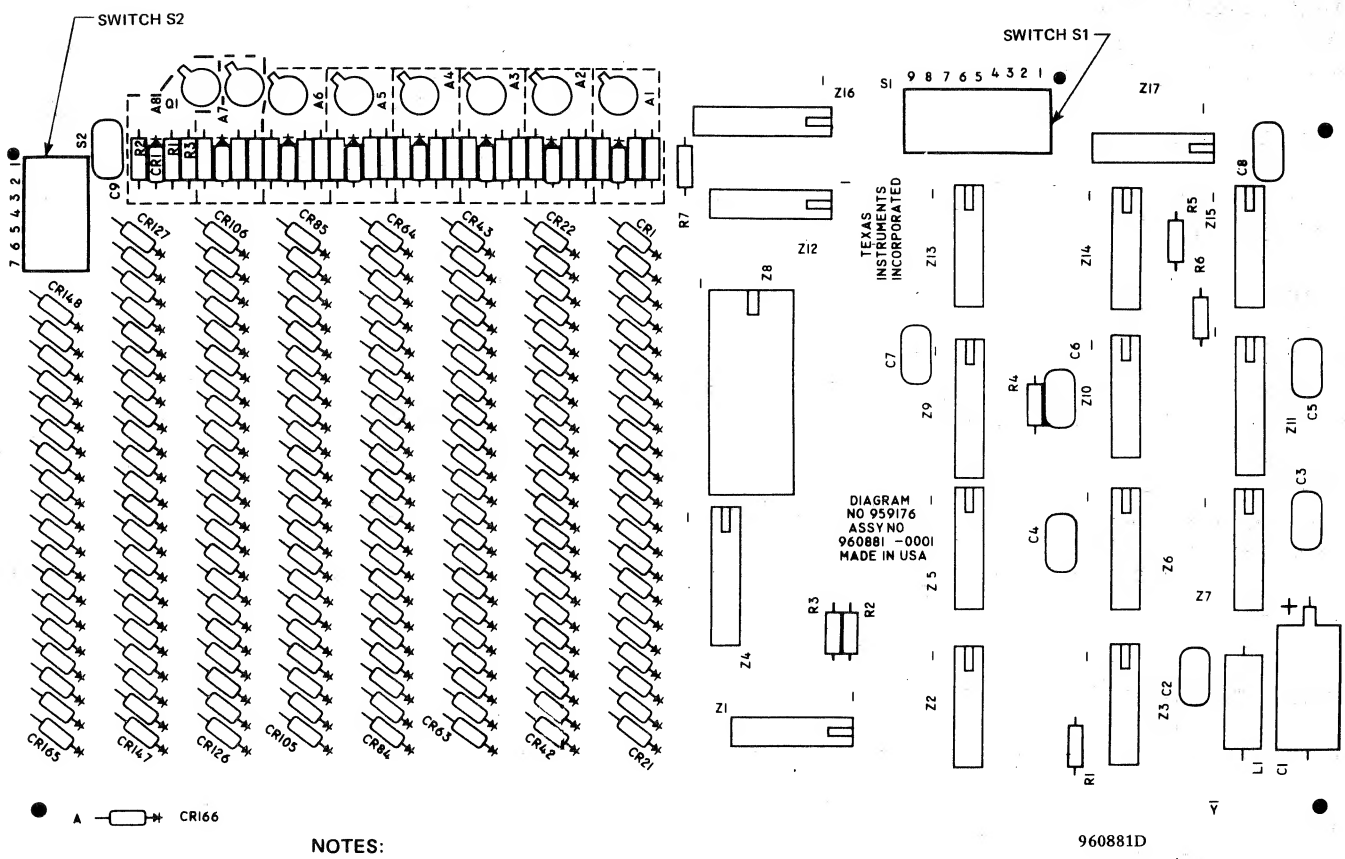

NOTES:

1. SEE APPENDIX B FOR PARTS LIST AND ASSEMBLY DRAWING.
2. SEE APPENDIX C FOR SCHEMATIC.
3. SEE TABLE 2-7.1 FOR SWITCH OPTIONS

FIGURE 2-7.1. ANSWER-BACK MEMORY PC CARD COMPONENT LOCATIONS.

TABLE 2-6.1 PC CARD CONNECTIONS FOR CODE AND CHARACTER SET

PRINTER CODE CARD ASSY. NO.	CODE AND CHARACTER SET	Z23	R46	R47	R48	R49	R53
959137-0001	ASCII	TI Part No. 959328-0001	10Ω	OPEN	10Ω	OPEN	OPEN
959137-0002	Baudot, U. S. Figures	TI Part No. 959329-0001	OPEN	10Ω	OPEN	10Ω	OPEN
	Baudot, U. K. Figures (Optional)	TI Part No. 959329-0001	OPEN	10Ω	OPEN	OPEN	10Ω

switch on the card and its function. A switch is closed when the 'dot' on the switch rocker arm is in the down position.

2-7.2 AUTO DEVICE CONTROL. The Auto Device Control option accommodes device control characters DC1, DC2, DC3, and DC4. When these characters are received from the line or generated by the terminal, the Record and Playback cassette transports are turned on and off according to the following:

DC1 (X-ON)	Playback ON
DC2 (TAPE)	Record ON
DC3 (X-OFF)	Playback OFF
DC4 (~~TAPE~~)	Record OFF

When the playback transport reads DC3 during playback, one character after DC3 will be read and transmitted before the playback transport is turned off. Strappable options allow any of these four code functions to be inhibited during transmit, receive, or local operations.

To use this option, install the Auto Device Controller PC card (TI Part No. 971481-0001) in card slot A6 (Figure 2-1.1) in the KSR unit. Strappable options permit the 733 ASR to respond to DC1, DC2, DC3, and DC4, as shown in Table 2-7.2.

2-7.3 MODEM LINE INTERFACE. To incorporate this option, install the Modem Line Interface PC card (TI Part No. 960887-000X) in Line Interface card slot A8 (Figure 2-1.1). The data terminal may now be connected to the Bell System Data Access Arrangement (DAA) with the phone line cable assembly (TI Part No. 959383-0001). Pin assignments are listed in Table 2-7.3. After connecting to the Bell System DAA line, adjust the modem level (potentiometer R18) as specified by the Bell System, using a meter which can measure modem output in dBm. Measure directly between the two modem output lines.

2-7.4 CURRENT LOOP LINE INTERFACE (NEUTRAL, POLAR AND COMPUTER). To add this option install the Teletype (TTY) Interface PC card (TI Part No. 959171-000X) in line interface card slot A8. The data terminal may now be connected to the communication line using a cable assembly (TI Part No. 959384-0001). For specific connections see Figures 2-7.1 and 2-7.2. For 60 mA operation, add R34 (150 ohm, 0.5 watt, 5 percent) to the TTY Interface PC card. Pin assignments are listed in Table 2-7.4. The computer interface is connected as a neutral interface.

2-7.5 UPPERCASE/LOWERCASE KEYBOARD. If the uppercase/lowercase keyboard capability is desired, the standard keyboard may be replaced with an Uppercase/Lowercase Keyboard (TI Part No. 959326-0001). To convert, remove the four mounting screws holding the keyboard to the keyboard brackets and disconnect the keyboard cable. When the new keyboard is installed and the cable is plugged in, be sure to remove the protective foam cover taped to the semiconductor chip on the bottom of the keyboard. Full ASCII and limited ASCII keyboard arrangements are shown in Figures 3-5.5 through 3-5.13, in Section III of this manual.

TABLE 2-7.1 ANSWER-BACK MEMORY PC CARD SWITCH OPTIONS

Switch S2[1]	Function[3]
1	Open to remove CR141 (bit 7 character 15) from matrix
2	Open to remove CR21 (bit 1 character 21) from matrix
3	Open to remove CR121 (bit 6 character 16) from matrix
4	Open to remove CR101 (bit 5 character 17) from matrix
5	Open to remove CR81 (bit 4 character 18) from matrix
6	Open to remove CR61 (bit 3 character 19) from matrix
7	Open to remove CR41 (bit 2 character 20) from matrix
Switch S1	**Function[3]**
1	Close for ASCII card; open for Baudot card
2	Close for ASCII card; open for Baudot card
3	Close for ASCII card; open for Baudot card
4	Open for ASCII card; close for Baudot card
5	Open for ASCII card; close for Baudot card
6	Close to disable printing of ABM contents at all times; open to enable printing of ABM contents when on-line in half-duplex
7	Close to disable recording of ABM contents at all times; open to enable recording of ABM contents when on-line in half-duplex
8	Close to put an ABM ON indication on pin 9 (future option); open for NO indication (spare run on AUX1R0F)
9[2]	Close to ignore stop bit (continuous memory cycling) open to stop ABM at stop bit programmed
1 and 4	Open both at same time to ignore triggering ABM from the line only

NOTES

1. Switch S2, all positions are normally closed; open only during unit test
2. Switch S1-9 is normally open; closed only during unit test
3. Switches are closed when the dot on the switch rocker arm is down

TABLE 2-7.2. (A) AUTOMATIC DEVICE CONTROL ENABLING OPTIONS

(For Part No. 971481)

Control Function	To Enable When Transmitting	Enabling Switch Section To Enable When Receiving	To Enable When in Local
DC1 or DC3 (Playback ON/OFF)	S2-1 (DC3 only)	S2-2	S2-3
DC2 or DC4 (Record ON/OFF)		S2-4	S2-5

NOTE

Control characters DC1 through DC4 function in the selected operating modes shown above. Close the appropriate switch section on S2 to enable the corresponding function. When the ADC ON/OFF switch is in the OFF position, all ADC functions are disabled except the automatic disconnect on receipt of the EOT character (if that option is installed).

TABLE 2-7.2. (B) AUTOMATIC DEVICE CONTROL (EARLIER MODEL) ENABLING OPTIONS

(Part No. 960891)

Control Function	To Enable When Transmitting	To Enable When Receiving	To Enable In Local
DC1 Resistor Between (Playback ON)	R1 J1-J2	R2 J3-J4	R3 J5-J6
DC2 Resistor Between (Record ON)	R7 J13-J14	R8 J15-J16	R9 J17-J18
DC3 Resistor Between (Playback OFF)	R4 J7-J8	R5 J9-J10	R6 J11-J12
DC4 Resistor Between (Record OFF)	R10 J19-J20	R11 J21-J22	R12 J23-J24

All Resistors are 10Ω, .25W, 5%

TABLE 2-7.3 PHONE LINE (MODEM) CABLE PIN FUNCTIONS*
(CABLE 959383-0001)

Terminal Pin No.	Wire Color at Spade Lug	Pin Function
C	Red	Communication line
3	Black	Communication line

*Used only with internal modem.

TABLE 2-7.4 CURRENT LOOP (TTY) INTERFACE CABLE PIN FUNCTIONS
(CABLE 959384-0001)

Terminal Pin No.	Wire Color at Spade Lug	Pin Function
4	White	Teletype positive receiver input loop
D	Green	Teletype receiver input loop
5	Black	Teletype transmitter output loop
E	Red	Teletype transmitter output loop

2-7.6 DUAL FORMAT PC CARDS. Four Dual-Format PC cards are necessary:

1. Dual-Format Transmit/Receive (TI Part No. 973905 or 969455*) slot A-5, KSR lower unit
2. Dual-Format Playback Control (TI Part No. 981319 or 969453*) slot XA-4, ASR upper unit
3. Dual-Format Record Buffer Control (TI Part No. 962285) slot XA-5, ASR upper unit
4. Dual-Format Tape Read/Write Control (TI Part No. 969451) slot XA-6, ASR upper unit)

With the Dual-Format PC cards in the terminal and the terminal TAPE FORMAT switch in the CONT position, the terminal has the strappable capability to handle either binary format data or standard format data with or without ETX. These options and their straps are listed in Table 2-7.5.

*This PC card is obsolete.

NOTE

The standard format *without* ETX option renders the terminal functionally equivalent to a terminal equipped with the standard Record Buffer (TI Part No. 960903), Tape Read/Write Control (962281), Playback Control (960905), and the ASCII Transmit/Receive (959135) PC cards.

The data terminal format options listed in Table 2-7.5 are explained in the following paragraphs.

2-7.6.1 CONTinuous Tape Format Position.

a. Standard Format Without ETX Decode - Each data character transmitted and received consists of 7 bits with parity in the 8th bit. Each

TABLE 2-7.5. DUAL-FORMAT PC CARDS STRAPPABLE OPTION ENABLES

733 ASR/KSR Terminal Format Options	TO ENABLE THIS OPTION. . . Dual Format ASCII Transmit/ Receive (Part No. 969455* OR 973905)	Dual Format Tape Read/Write Control (Part No. 969451)	Dual Format Playback Control (Part No. 969453* OR 981319)	Dual Format Record Buffer (Part No. 962285)
†Standard Format Without ETX	Install R17 Between J3 & J4	Install R1 Between J1 & J2	—OR— S1-1 OFF Install R5 Between J5 & J6 S1-2 ON	Install R8 Between J3 & J4 Remove R9 Between J5 & J6 Remove R13 Between J1 & J2
Standard Format With ETX	Install R17 Between J3 & J4	Install R1 Between J1 & J2	—OR— S1-1 OFF Install R5 Between J5 & J6 S1-2 ON	Install R13 Between J1 & J2 Remove R9 Between J5 & J6 Remove R8 Between J3 & J4
Binary Format	Install R17 Between J1 & J2	Install R1 Between J3 & J4	—OR— S1-1 ON Install R5 Between J3 & J4 S1-2 OFF	Install R8 Between J3 & J4 Install R9 Between J5 & J6 Remove R13 Between J1 & J2

*This PC card is obsolete.
†This option is used in the standard data terminal.

recorded block of data consists of 86 characters. Recording of a block out of the buffer is initiated only when the 86th character is entered (CONT tape format). All characters, including carriage return, have a ZERO in the 8th bit.

b. Standard Format With ETX Decode - Each data character transmitted and received consists of 7 bits with parity in the 8th bit. The recording of a block is initiated either when the 86th character is entered into the buffer, or when the control character ETX is decoded. All characters, except the control character ETX, have a ZERO in the 8th bit.

c. Binary Format - Each data character transmitted and received consists of 8 bits. Each block consists of 86 characters. Recording of a block out of the buffer is initiated only when the 86th character is entered in the buffer. The entire 8-bit character field is recorded.

2-7.6.2 LINE Tape Format Position. Each data character transmitted and received consists of 7 bits with parity in the 8th bit. Each block of data in the buffer is recorded on tape either when the 86th character is entered, or when the carriage return character is decoded. All characters except the carriage return character have a ZERO in the 8th bit.

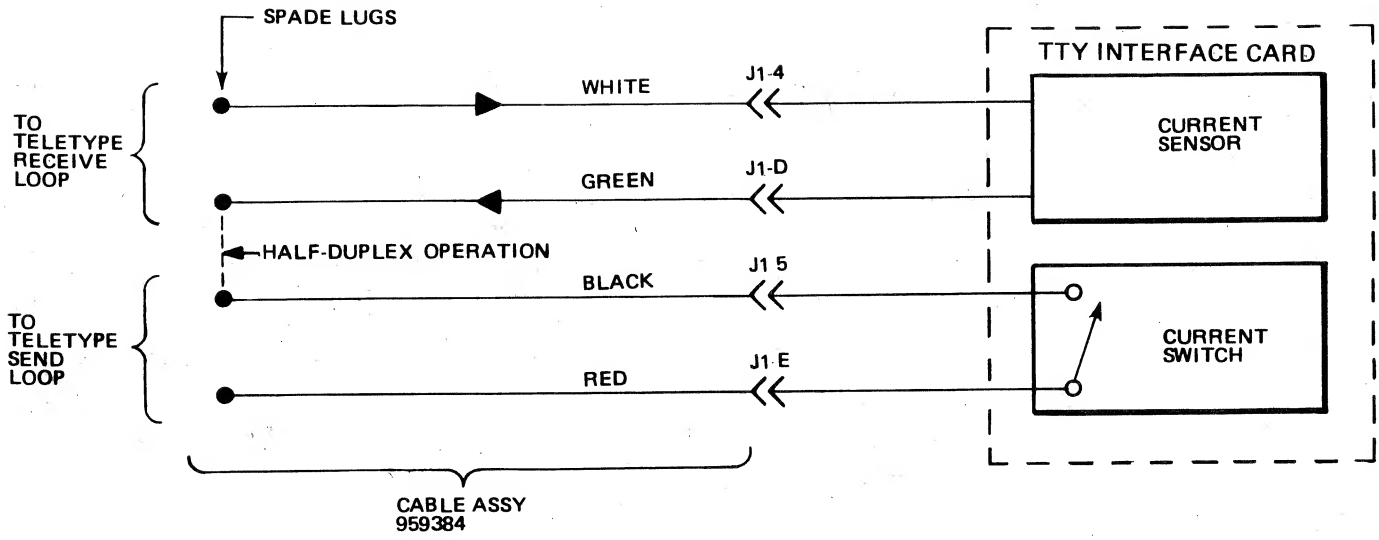

FIGURE 2-7.2. TELETYPEWRITER NEUTRAL INTERFACE WIRING DIAGRAM

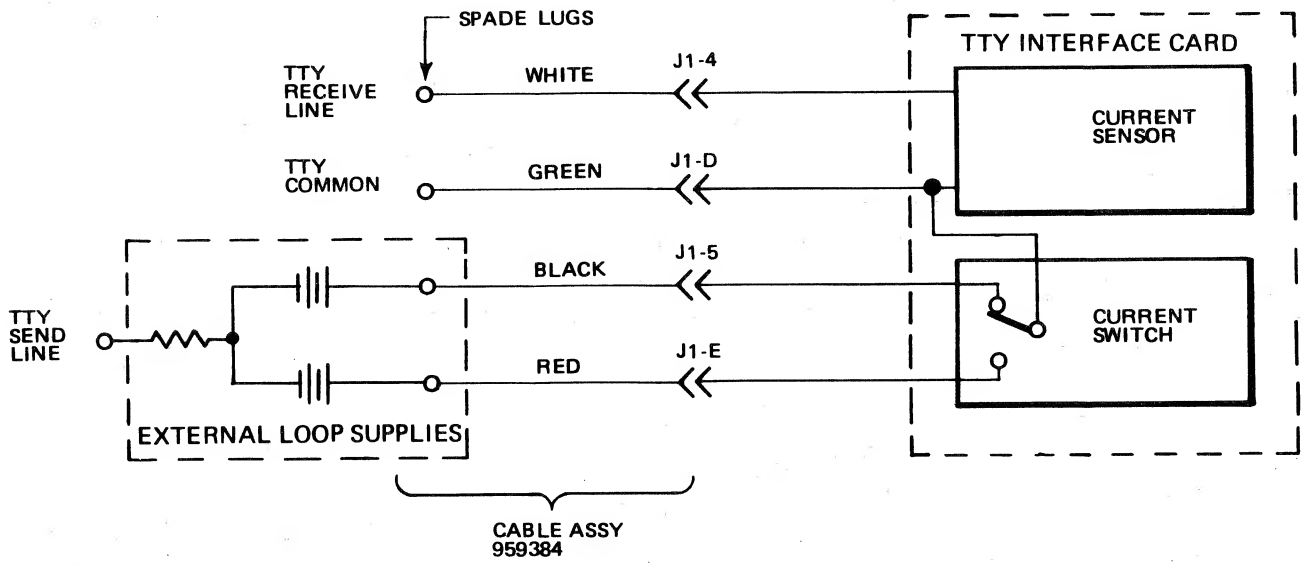

FIGURE 2-7.3. TELETYPEWRITER POLAR INTERFACE WIRING DIAGRAM

2-7.7 AUTOMATIC SEARCH CONTROL (ASC). Components required for installation of the ASC option depend on which other options are installed in the 733 ASR. When used by itself for local operation, the ASC requires the following items:

(1) ASC printed-circuit card installed in ASR card slot A7

(2) Motherboard-access PC card installed in ASR card slot A6

(3) Top-access connector to connect the two above PC cards.

(4) 14-ampere power supply, consisting of two PC cards in card slot A9 and A10.

When the ASC is used in conjunction with the Remote Device Control which permits remote operation of the ASC, the motherboard-access PC card is not needed in card slot A6. If the Auto Device Control option is already installed, the motherboard-access PC card is not required in card slot A6. But in all three cases the top access connector (item 3 above) is required between the ASC PC card in slot A7 and one of the other three PC cards in slot A6.

Install the two 14-ampere power supply PC cards into ASR card slots A9 and A10 (right row of PC card rack).

2-7.8 REMOTE DEVICE CONTROL. The Remote Device Control option is contained entirely on one PC card. To install, insert the RDC PC card into PC card slot A6 (Figure 2-1.1) of the KSR lower unit. Take special care when installing the PC card to prevent accidently changing the pencil switch (S2) positions.

CAUTION

Upon installation, ascertain that the pencil switch (S2) positions on the RDC PC card are set as follows for normal operation:

S2 Position	Normal State
1	ON
2	ON
3	ON
4	ON
5	ON
6	OFF
7	OFF

2-7.9 1200-BAUD INTERFACE. The 1200-Baud Interface option consists of a 1200-Baud Transmit PC card (slot A7 or A8, lower unit), a 1200-Baud Receive PC card (slot A5), a EIA line interface connector cable, and a panel SPEED switch. To install in the 733 ASR, proceed as follows.

a. Remove the standard 300-Baud Transmit/Receive PC card from lower unit PC card rack slot A5 (green ejector) and replace with the 1200-Baud Receive PC card.

b. Install the 1200-Baud Transmit PC card in PC card slot A8 (gray dot) if used with an external modem. If the 1200-Baud Modem PC card is installed in slot A8, install the 1200-Baud Transmit PC card in slot A7 (violet dot).

c. Replace the standard 300-Baud EIA cable from the terminal to the communications interface (see Figure 2-4.1) with the 1200-baud EIA cable.

d. Gently pry up the black plastic panel which covers the ON LINE/OFF and POWER switch, and

(1) Install the SPEED switch in the extra hole in the switch bracket next to the existing ON LINE switch. Mount the lock washer and knurled nut atop the bracket and the locking ring and hex nut on the bottom.

(2) Snap the new black POWER switch panel into place.

(3) Remove the connector which connects the ON LINE switch to the keyboard. Insert the new SPEED switch wires into position 8 and position H of the connector. Reconnect to the keyboard.

2-7.10 AUTO ANSWER CONTROL. The Auto Answer Control (TI Part No. 960984) is available in two versions. One connects the data terminal to the communication line using a Bell System type CBS data access arrangement (DAA), or equivalent, which requires an internal modem in the 733 Data Terminal. The second Auto Answer Control version is designed for use with a Bell System 103A data set or equivalent (no internal modem is required). A display panel for the 733 Data Terminal is included with both versions.

2-7.10.1 Installation of CBS-type DAA Auto Answer Control. The Auto Answer version for use with CBS-type DAA includes an Auto Answer PC card (TI Part No. 960885), a display panel (960165), a panel mounting bracket (971420), a display panel cable (971556), an internal modem PC card (960887 series), and a 300-baud modem cable (971557). To install this Auto Answer Control version, switch POWER OFF, unplug the power cord, and proceed as follows.

a. Ascertain that the Auto Answer PC card (960885) has resistor R2 (10 ohms) installed between jumpers J11 and J13. Also check that there is no resistor between J12 and J18.

b. Lift the terminal cover, remove the PC card rack cover, and insert the Auto Answer PC card (purple color ejector) into PC card slot A7 (purple color dot).

c. Install the modem PC card (grey color ejector) into PC card slot A8 (grey color dot).

d. Install the display panel as follows. Refer to Figure 2-7.4 for location of components.

(1) Remove the two Power Supply PC cards from PC card slots A9 and A10 (brown and red ejectors).

(2) On the underside of the terminal cover, use diagonal cutters to cut the four pins which hold the blank option panel in place. Cut close to the metal push-on fasteners and pry off the fasteners with a screwdriver. Then cut the four plastic pins again, as short as possible to prevent interference with the new panel.

(3) Attach the panel mounting bracket to the PC card rack front wall, using two 4-40 x 3/16 screws, two No. 4 splitlock washers, and two 4-40 hex nuts. Insert the screws from inside the PC card rack. See Figure 2-7.5 for installation details.

(4) Attach the display panel cable (971556) connector P14 to the PC card on the underside of the panel as shown in Figure 2-7.4. The connector number should face the underside of the panel.

(5) Loosely insert two 6-32 x 5/16 screws into the front lower part of the display panel. Place a drop of Loctite on the threads.

(6) Locate the display panel so that the two 6-32 screw heads insert into the keyhole slots in the back of the POWER switch box. Press down on the panel to seat the screws into the narrow part of the keyholes.

(7) Insert a screwdriver through the holes in the front of the POWER switch box and tighten both 6-32 screws.

(8) Insert and tighten two 4-40 x 1/4 screws and two No. 4 flat washers through the slots at the rear of the display panel and into the panel bracket as shown in Figure 2-7.5.

(9) Replace the two Power Supply PC cards removed in step (1) above. Be sure the colored PC card ejectors match the color dots on the PC card rack.

(10) Route the display panel cable (971556) behind and below the keyboard and along the left bottom of the data terminal base as shown in Figure 2-7.4. Secure the self-adhesive clamps to the bottom of the data terminal case.

(11) Plug connector P1 onto the top of the Auto Answer PC card (card slot A7, purple ejector) installed in step b. above.

e. Connect the DAA cable leads to the CBS-DAA type data coupler according to Table 2-7.6. Connect the other end of the cable (P1) to the J1 connector at the right rear of the 733 Data Terminal. Secure the P1 connector with the screws provided.

f. Replace the PC card rack cover, close the terminal cover, and switch POWER to ON.

2-7.10.2 Installation of 103A-Type Data Sets. The Auto Answer Control version for use with 103A-type data sets includes an Auto Answer Control PC card (TI Part No.

TABLE 2-7.6. 300-BAUD AUTO ANSWER CONTROL PIN ASSIGNMENTS AND SIGNAL NAMES FOR CBS-DAA SERIES (OR EQUIVALENT) DATA COUPLERS*

Cable Lead Colors	DAA Terminal Marking	Signal Name
Black	SG	Signal ground
Brown	DA	Data access
Red	OH	Off hook
Orange	DT	Data tip
Yellow	DR	Data ring
Green	RI	Ring indicator
White	CCT	Coupler cut through

*Used only with built-in internal Answer Modem option.

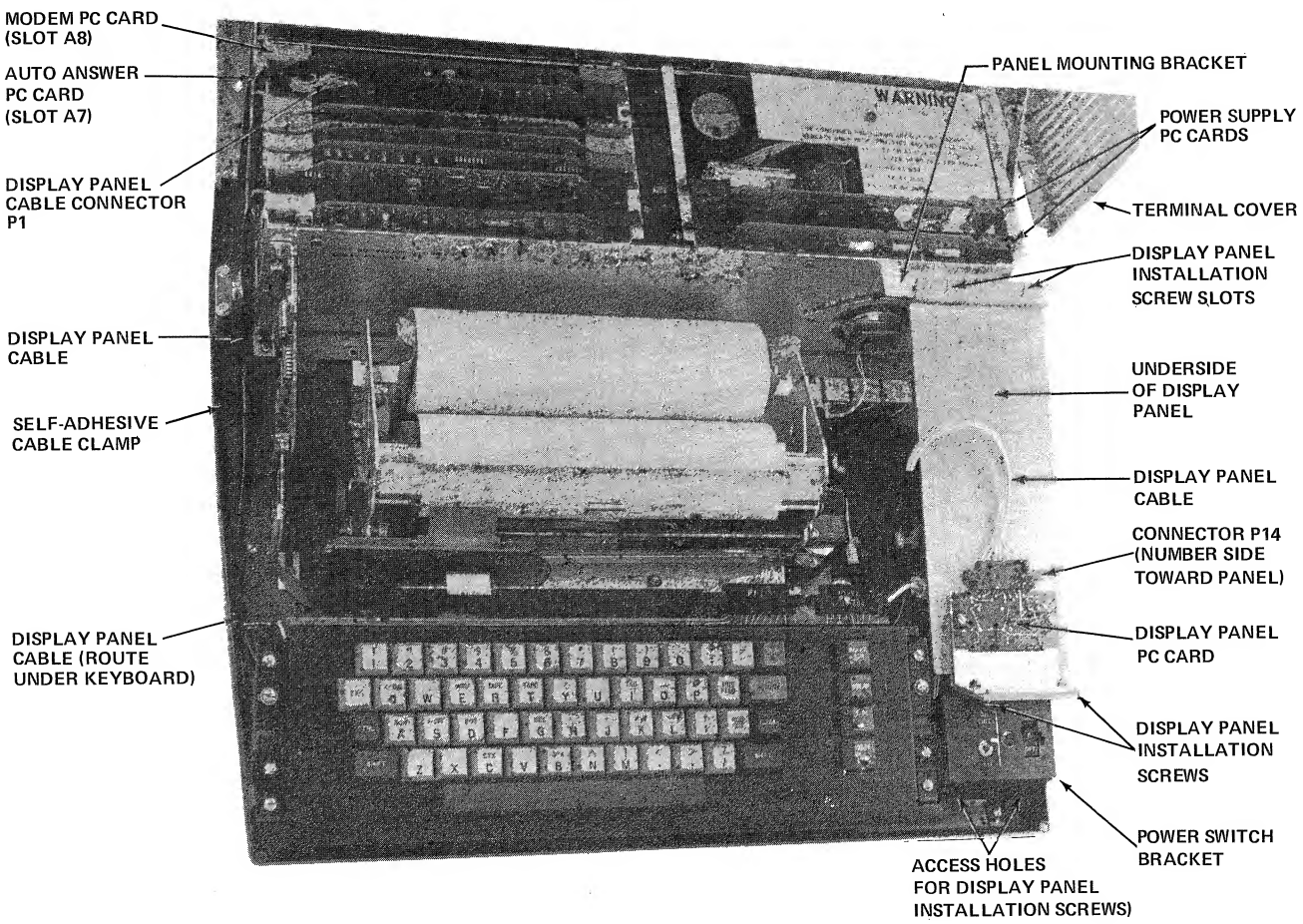

FIGURE 2-7.4. AUTO ANSWER CONTROL OPTION INSTALLATION COMPONENTS

960885), a display panel (960165), a display panel cable (971556), and a 300-baud Auto Answer cable (971555). To install this Auto Answer Control version, switch POWER to OFF, unplug the power cord, and proceed as follows.

a. Ascertain that the Auto Answer PC card (960885) has resistor R1 (10 ohms) installed between jumpers J12 and J18. Also check that there is no resistor between J11 and J13.

b. Lift the terminal cover, remove the card rack cover, and install the Auto Answer PC card (**gray color ejector**) into PC card slot A8 (**gray color dot**).

c. Install the display panel as described in step 2-7.10.1.d. above.

d. Connect the 300-baud Auto Answer cable (971555) by connecting the P13 connector to the **103A-type data set**. Connect the other end (P1) to the J1 jack at the right rear of the 733 Data Terminal. Secure the P1 connector with the screws supplied.

e. Replace the PC card rack cover, close the terminal cover, and switch POWER to ON.

2-7.11 ASR FOOTPEDAL. The optional ASR Footpedal assembly (**TI Part No. 973866**) controls tape playback in conjunction with the Remote Device Control option. The Footpedal option consists of a footswitch, interconnecting shielded cable, and a connector marked P2. To install the Footpedal, simply plug connector P2 into the J2 receptacle (auxiliary interface connector) at the rear of the Model 733 ASR Data Terminal (see Figure 2-4.1 for location of J2). Place the footswitch at any convenient spot on the floor.

2-7.12 ACOUSTIC COUPLER. The Acoustic Coupler option (TI Part No. 969619 or 969597) equips the data terminal to communicate with remote facilities through a standard telephone desk set. The Acoustic Coupler option kit is easily installed on the ASCII-code Models 733 ASR, KSR, and RO Data Terminals. The kit is supplied with a jumper connector for installation into the communication interface connector (J1) at the rear of the data terminal (see Figure 2-4.1). The jumper connector permits use of the terminal only with the Acoustic Coupler communication interface. An optional "Y" connector cable (TI Part No. 973254) is available to equip the data terminal to communicate through the Acoustic Coupler and a variety of other communication interfaces.

To install the Acoustic Coupler option, first check that all the following parts are supplied:

(1) Acoustic Coupler panel with attached cable and connector (TI Part No. 969620 or 969644)

(2) Acoustic Coupler PC card assembly (TI Part No. 974065 or 974054)

(3) Jumper connector (TI Part No. 973258) or optional "Y" connector cable (TI Part No. 973254)

(4) Panel mounting bracket (TI Part No. 971420)

(5) Cable clamp, self-adhesive

(6) Cable tie-down straps (2 each)

(7) Four 4-40 x 5/16 screws, two 4-40 nuts, two 6-32 x 5/16 screws (969619 only) or two 6-20 x 1/2 screws (969597 only) six No. 4 flat washers, and four No. 4 split-lock washers.

(8) Loctite sealant (969619 only).

CAUTION

Disconnect the data terminal ac power cord from the wall outlet before proceeding.

a. Lift the terminal cover and remove the blank plastic option panel by cutting the four protruding plastic pins with diagonal cutters. Shear the pins as close to the metal retaining nuts as possible and pry off the nuts with a screwdriver.

b. Remove the blank option panel from the pins and again trim the pins as short as possible with the diagonal cutters.

c. Remove the PC card rack cover by loosening the two retaining screws; fold the cover back and lift the three tabs at the rear of the cover clear of their slots in the PC card rack.

d. Remove the two Power Supply PC cards (brown and red ejectors) as follows:

(1) Place thumbs under the PC card ejectors and lift upward to dislodge the PC card.

(2) Lift the PC cards up and out of their PC card rack slots.

e. Attach the panel mounting bracket to the PC card rack front wall, using the hardware shown in Figure 2-7.5.

NOTE

Some Model 733 Data Terminals are delivered with the bracket installed.

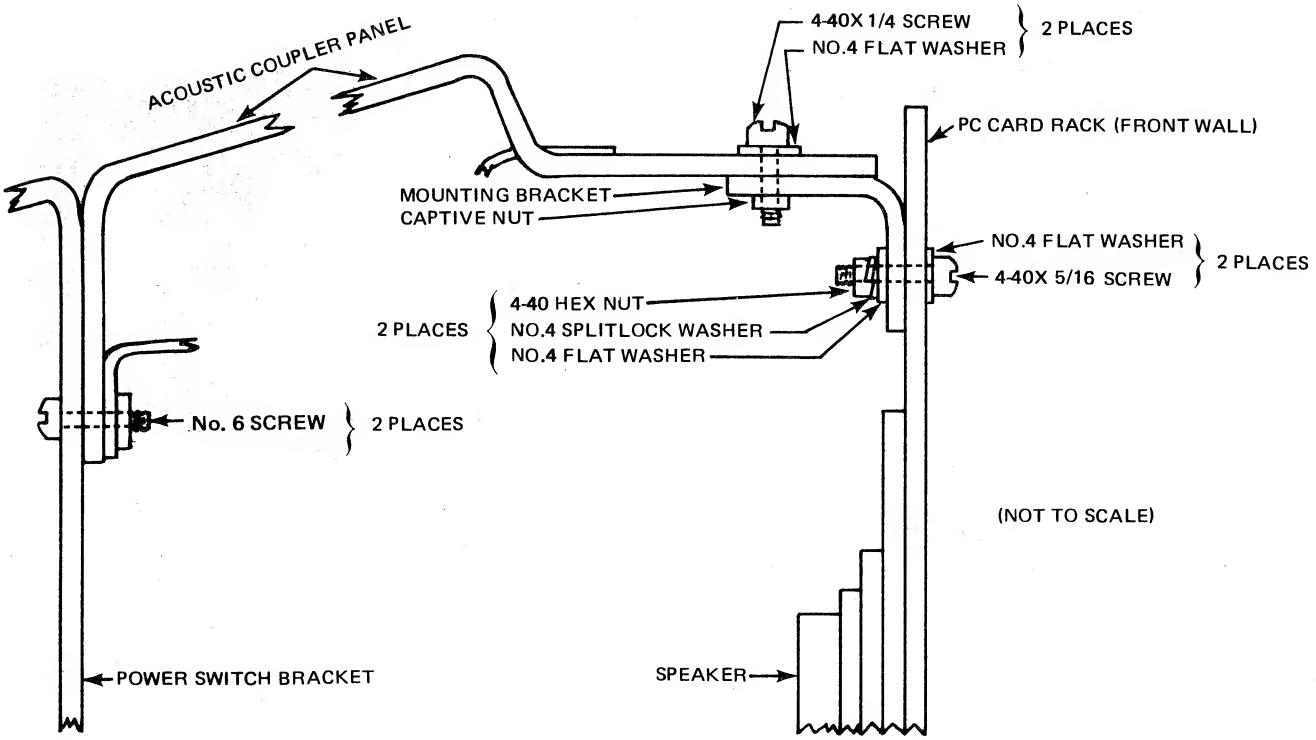

FIGURE 2-7.5. ACOUSTIC COUPLER PANEL INSTALLATION DETAILS

f. Install the cable attached to the Acoustic Coupler panel, routing the cable between the keyboard and the printhead cable bracket and between the left side of the PC card rack and the terminal cover, slide support as shown in Figure 2-7.6.

(1) Remove the protective paper from the self-adhesive cable clamp and press it on the terminal base between the keyboard and the printhead PC card brace as shown in Figure 2-7.6.

(2) Press the cable into the cable clamp slots.

(3) Loosely attach the cable to the PC card rack using a cable tie-down strap as shown in Figure 2-7.6.

g. Add a drop of Loctite to the two 6-32 x 5/16 screws and start them into the captive nuts on the front part of the Acoustic Coupler panel as shown in Figure 2-7.5. Kit 969597 contains two 6-20 x 1/2 self threading screws. The Loctite is not required. Position the panel so that the loose No. 6 screws insert into the two keyhole slots at the rear of the POWER switch box.

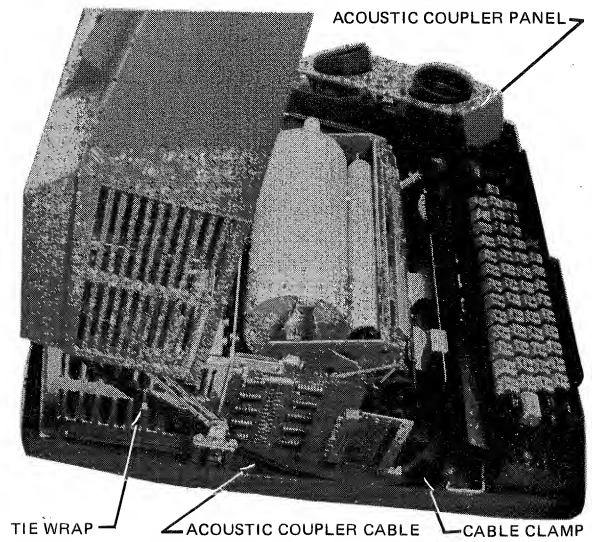

FIGURE 2-7.6. INSTALLING THE ACOUSTIC COUPLER PANEL CABLE

(1) Press down on the front of the Acoustic Coupler panel so the two loose No. 6 screws seat in the narrow part of the keyhole slots in the POWER switch box.

(2) Insert two 4-40 x 5/16 screws and two No. 4 flat washers through the two slots in the upper part of the Acoustic Coupler panel and into the mounting bracket captive nut as shown in Figure 2-7.5. Tighten the screws.

(3) Insert a screwdriver through the front of the POWER switch box as shown in Figure 2-7.7 and tighten the two No. 6 screws at the front part of the Acoustic Coupler panel.

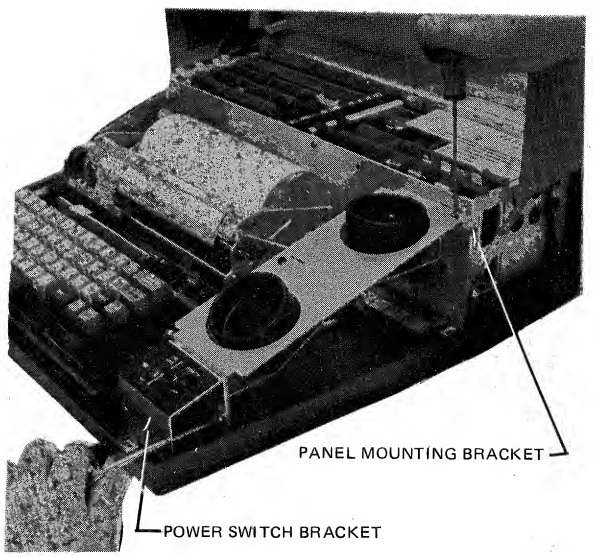

FIGURE 2-7.7. INSTALLING THE ACOUSTIC COUPLER PANEL

h. Install the Acoustic Coupler PC card (grey ejector) into the left rear PC card slot. Press down firmly on the PC card ejectors.

(1) Connect the Acoustic Coupler panel cable (installed in step f. above) connector to the left side of the Acoustic Coupler PC card. Route the cable out the rear of the PC card rack.

(2) Tighten the loosely attached cable tie-down strap installed in step f. (3) above.

i. Reinstall the two Power Supply PC cards removed in step d. above. Be sure the ejector colors match the color dots on the PC card rack. Press down firmly on the ejectors.

j. Replace the PC card rack cover by inserting the three ears on the rear of the cover into the three slots at the top rear of the PC card rack. Fold down the cover as if hinged and tighten the two cover retaining screws.

k. Install the desired connector into the communication interface connector (J1) at the rear of the data terminal. Two connectors are available:

- A jumper connector (TI Part No. 973258) supplied with the Acoustic Coupler kit equips the terminal to communicate only through the Acoustic Coupler. Connector pin assignments are listed in Table 2-7.7.
- An optional "Y" connector and cable (TI Part No. 973254) permits a variety of interface connections in addition to the Acoustic Coupler. Y-connector pin assignments are listed in Table 2-7.8.

To install either connector into the data terminal, simply plug the connector into the rightmost rear connector slot of the data terminal; insert two 4-40 x 5/16 screws into the connector ears and tighten to secure the connector.

TABLE 2-7.7.
PIN ASSIGNMENTS FOR ACOUSTIC COUPLER
JUMPER CONNECTOR (TI PART NO. 973258)

H to 1
10 to 4
8 to B
9 to C
K to 5

TABLE 2-7.8. PIN ASSIGNMENTS FOR ACOUSTIC COUPLER
OPTIONAL "Y" CONNECTOR (TI PART NO. 973254)

Y-Connector Pin No.	Signal Source	Function	External Connector Pin No.	
A	Data Terminal	Protective Ground	1	
H	Data Terminal	Transmitted Data	2	
10	Data Terminal	Received Data	3	
8	Data Terminal	Clear-to-Send	5	Cannon DP-25P
9	Data Terminal	Data-Set Ready	6	or Equivalent
7	Data Terminal	Signal Ground	7	
K	Data Terminal	Carrier Detect	8	
6	Data Terminal	Data-Terminal Ready	20	
F	Data Terminal	Request-to-Send	4	
1	Acoustic Coupler	Transmitted Data	2	
4	Acoustic Coupler	Received Data	3	
B	Acoustic Coupler	Clear-to-Send	5	Cannon DP-25S
C	Acoustic Coupler	Data-Set Ready	6	or Equivalent
3	Acoustic Coupler	Signal Ground	7	
5	Acoustic Coupler	Carrier Detect	8	
A	Acoustic Coupler	Protective Ground	1	

2-7.13 **CALCULATOR NUMERIC CLUSTER KEYBOARD.** If the calculator cluster keyboard capability is desired, the standard keyboard may be replaced by the Calculator Cluster Keyboard Kit (TI Part No. 974056-0001). To convert, remove the four mounting screws holding the keyboard to the keyboard brackets and disconnect the keyboard cable. Install the new keyboard with the keyboard cover supplied in the kit and reconnect the cables to the keyboard. Calculator cluster keyboard layout is shown in Figures 3-5.16 through 3-5.20 in Section III of this manual.

SECTION III

THEORY OF OPERATION

3-1 GENERAL.

Five basic functions are performed within each KSR:

a. Power supply (Paragraph 3-3)

b. Printer (Paragraph 3-4)

c. Keyboard and Interface (Paragraph 3-5)

d. Line Interface (Paragraph 3-6)

e. Terminal control (Paragraph 3-7).

Adding the ASR Module Assembly (upper unit), the data terminal has five additional functions necessary for ASR terminal operation:

a. Record controller

b. Playback controller

c. Motion controller

d. Display functions

e. Cassette transport.

Each terminal function may be contained on one or more printed circuit (PC) cards in the terminal. Therefore, terminal functions, rather than terminal PC cards, are described in this theory of operation. Frequent references are made to Texas Instruments assembly and electrical drawings contained in the appendixes to this manual.

3-2 SYSTEM ARCHITECTURE.

The data terminal architecture is arranged around a single, serial data bus, a concept illustrated in Figure 3-2.1. The bus is time-shared both by a line loop and local loop within the terminal and by the devices within each loop. The function of controlling which devices may use the serial data bus, and during what times, is done by a terminal control. Because of the high rate at which data is transferred within the terminal on the data bus, and the comparatively slow rate at which the devices on the bus can react once they receive the data, operation of each loop within the terminal is essentially simultaneous and independent. This simultaneous operation is illustrated in Figure 3-2.2, which shows that the terminal control can send a data character on the bus as rapidly as one every 88 μsec. Conversely, the table in Figure 3-2.2 states that the fastest line action period is one every 8.33 msec and the fastest local action is one every 180 μsec.

Since the terminal control can provide enables to the line and local loops much faster than they require, both loops experience negligible delays from terminal control answering their requests to send data on the serial bus.

A better understanding of the terminal control will yield easier comprehension of the system architecture. Figure 3-2.2 shows that the terminal control accepts requests from each transmitting device. The terminal control also monitors the status of each device on the data bus; i.e., whether the device is on-line, local, off, busy, etc. If more than one device has requested to transmit on the serial data bus, the terminal control must decide which device has the highest priority (see priority order in Figure 3-2.3), whether that device is on-line or local, and if the line loop or local loop is busy. For example, if the highest priority device requesting to transmit to the serial data bus is in local and the local loop is not busy, the terminal control will enable the transmitting device (i.e., keyboard) and all receiving devices (i.e., printer), if they too are in local, to the data bus and the data on it during an enable time frame. The local loop will then go busy for some time, and the terminal control may then act upon any request it may have from a line device (if the line loop is not busy). Figure 3-2.4 shows a typical timing sequence when two devices simultaneously request the data bus. Figures 3-2.5 through 3-2.8 show some of the signals and data paths involved when terminal control interfaces with the various devices on the serial data bus.

3-3 POWER SUPPLY.

A functional block diagram of the power supply is shown in Figure 3-3.1. The supply provides voltages of +33V unregulated, +5V regulated, +12V regulated, -5.6V regulated and -12V regulated to the terminal. A power reset is incorporated in the circuit to reset the terminal upon power up or power failure.

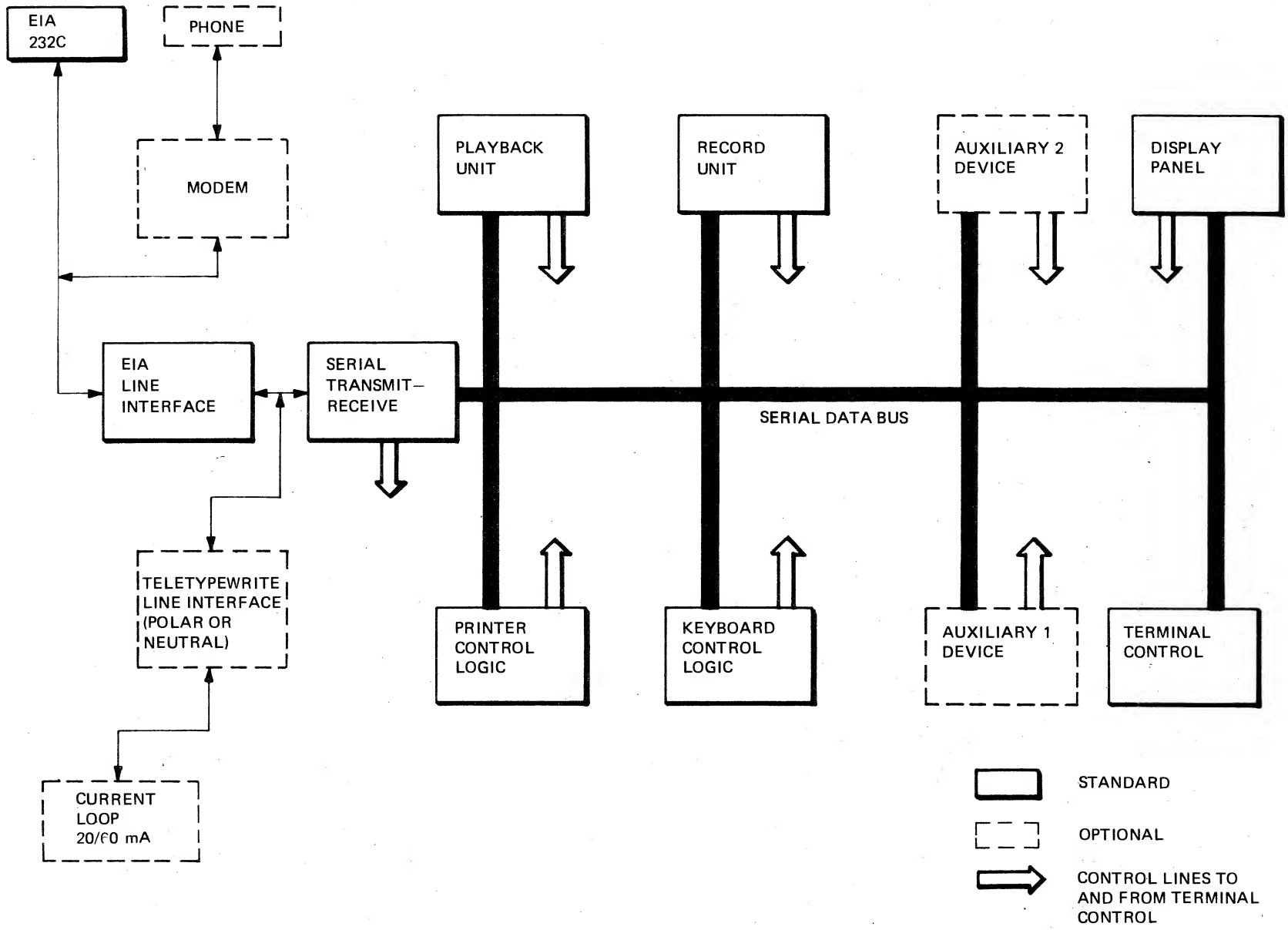

FIGURE 3-2.1. ASR DATA TERMINAL SYSTEM ARCHITECTURE

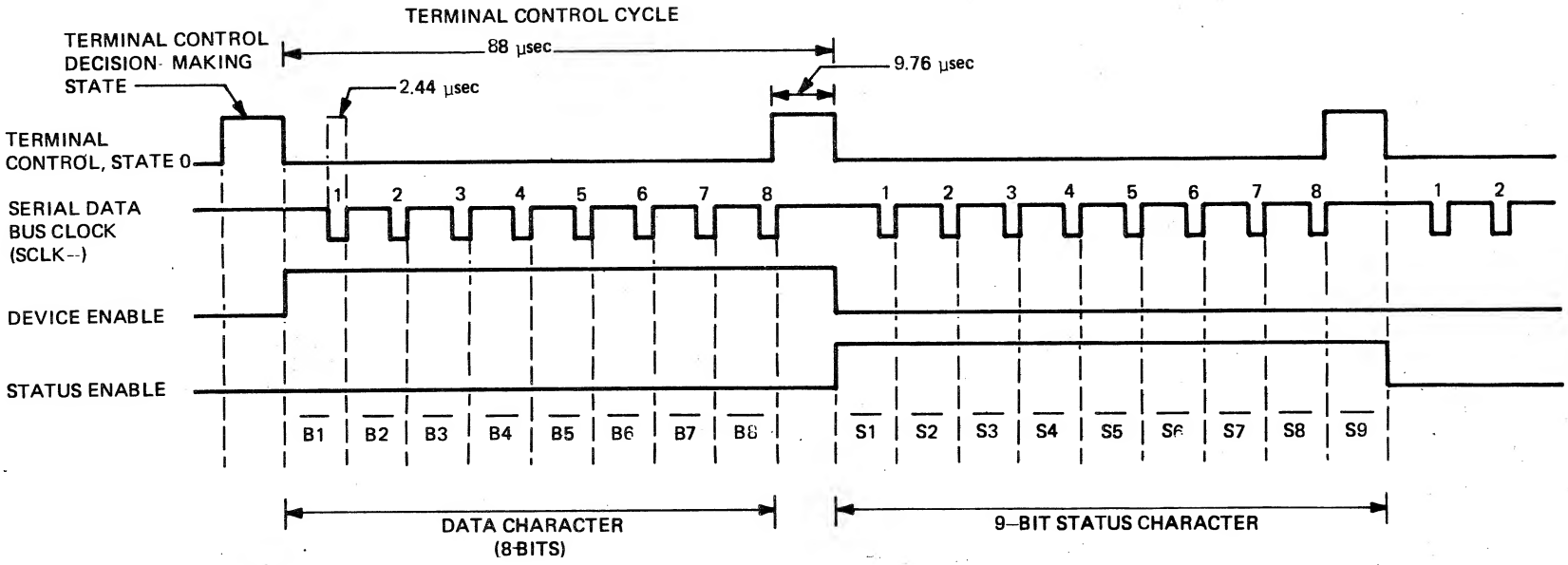

MAXIMUM REQUIRED TRANSMIT RATES TO SERIAL DATA BUS

	RATE CPS *	PERIOD msec
1. SERIAL RECEIVER/XMTTER	30	33
2. RECORD PRINT BUFFER	33	30
3. AUX. 2 (ANSWER-BACK)	30	33
4. 1200 BAUD RECEIVER/XMITTER	120	8.33
5. KEYBOARD (REPEAT TO RECORD)	1140	0.88
6. AUX. 1 (AUX. INPUT TO RECORD)	1140	0.88
7. PLAYBACK (BUFFER TO ASC)	5.5K	0.18

* CPS = CHARACTERS PER SECOND

$\overline{S1}$	RCBFFL	RECORD BUFFER FULL
$\overline{S2}$	BOEOCA1-	CAS-1 NOT AT THE END OF THE TAPE
$\overline{S3}$	BOEOCA2-	CAS-2 NOT AT THE END OF THE TAPE
$\overline{S4}$	RERROR-	NO PLAYBACK ERROR
$\overline{S5}$	RFEED-	PLAYBACK NOT ON
$\overline{S6}$	KBDLOC	KEYBOARD IN LOCAL
$\overline{S7}$	PRNLOC	PRINTER IN LOCAL
$\overline{S8}$	PRNOFF	PRINTER OFF
$\overline{S9}$	PNHRDY-	RECORDER NOT READY

FIGURE 3-2.2. DATA TERMINAL SERIAL DATA BUS TIMING DIAGRAM

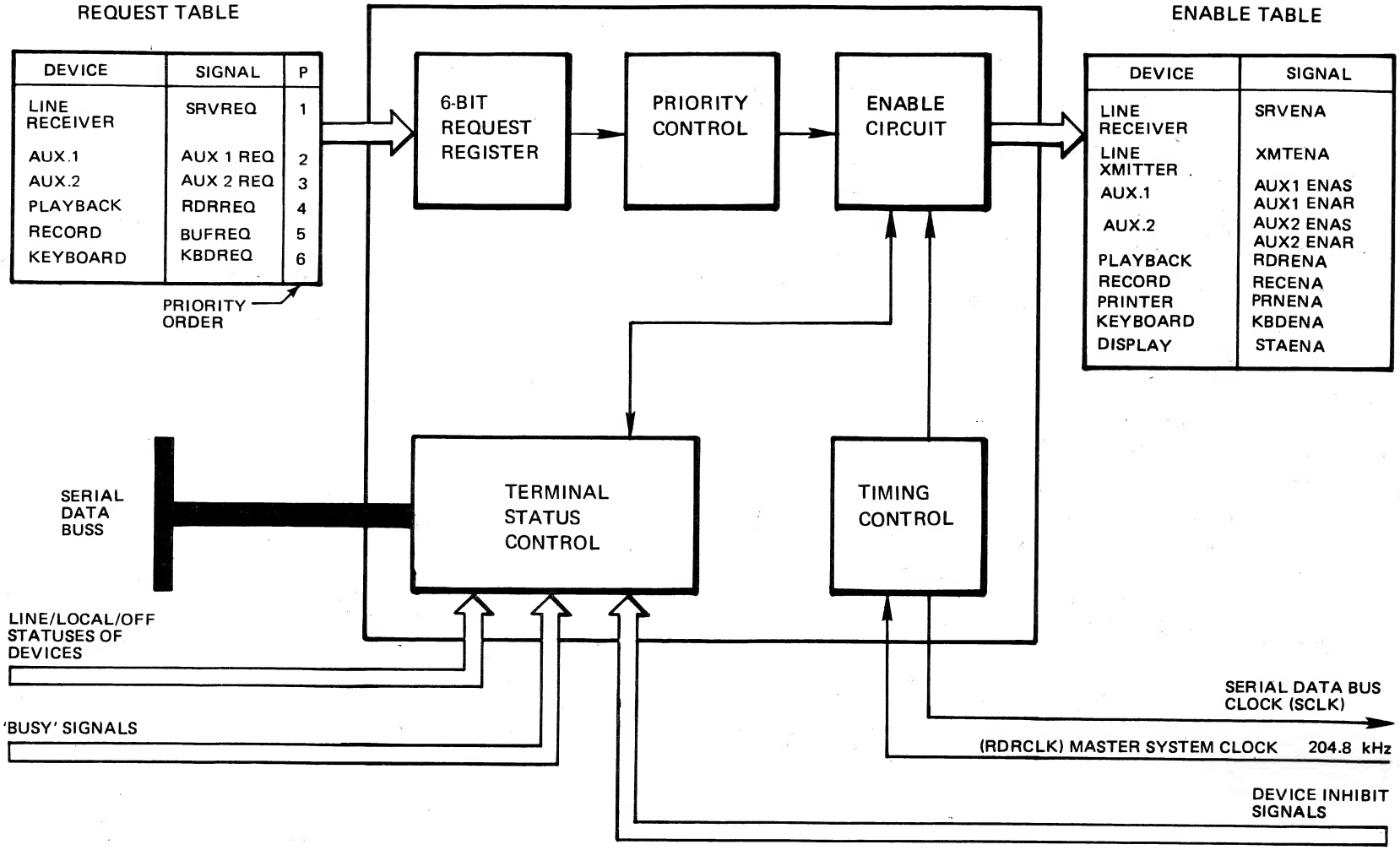

FIGURE 3-2.3. TERMINAL CONTROL BLOCK DIAGRAM

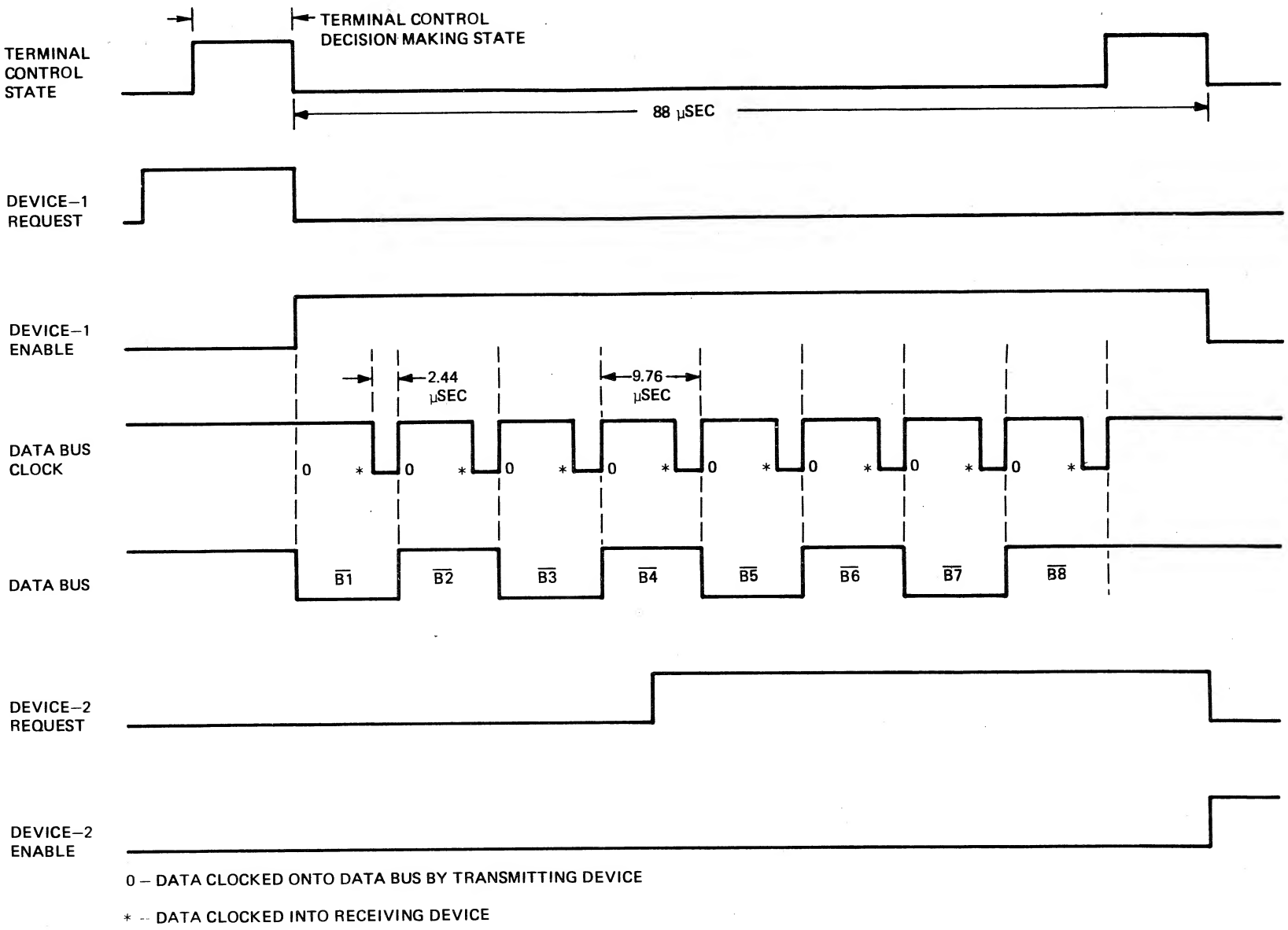

FIGURE 3-2.4. TIMING DIAGRAM, TYPICAL DATA TRANSMISSION VIA DATA BUS

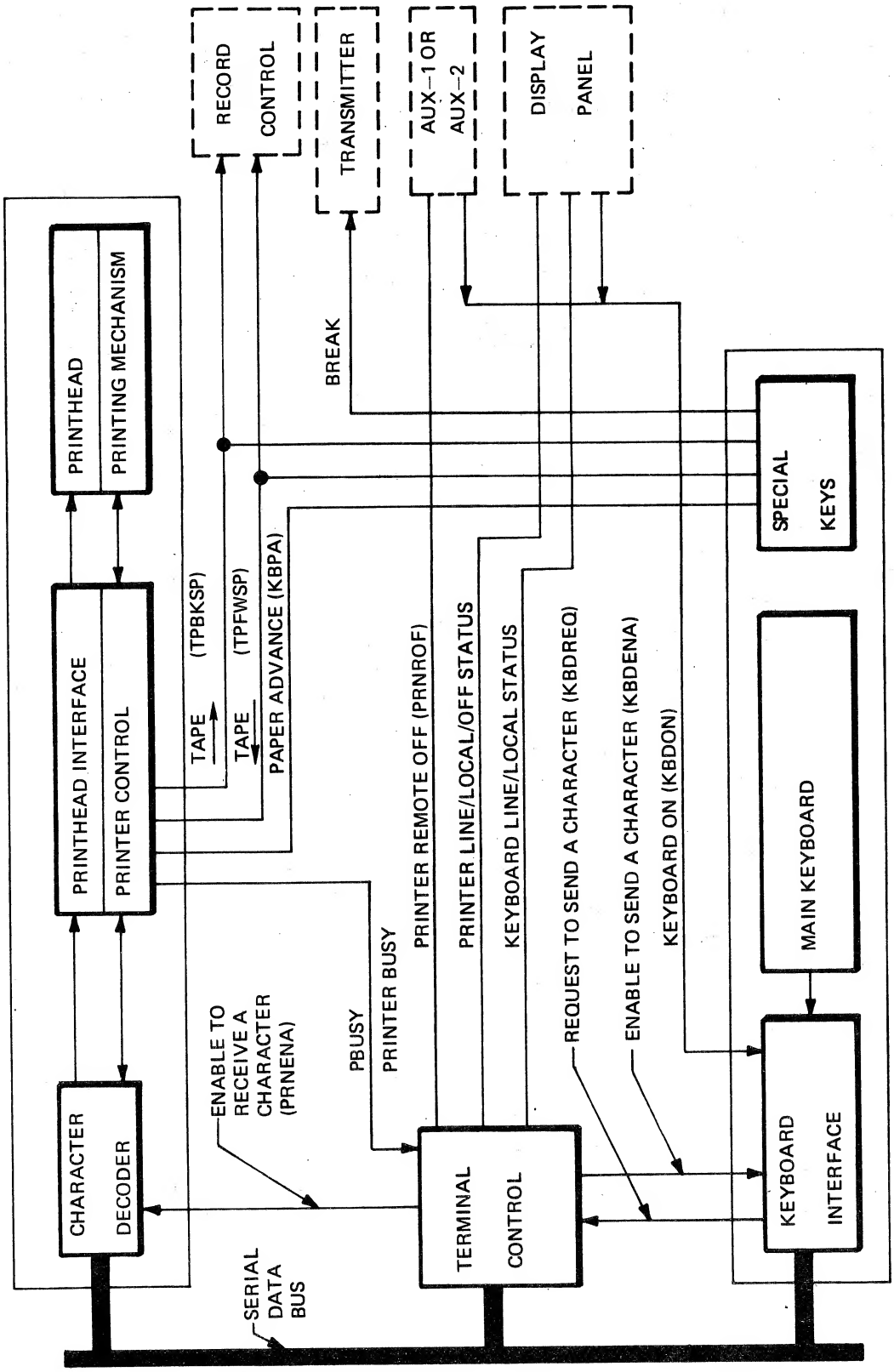

FIGURE 3-2.5. TERMINAL CONTROL PRINTER, AND KEYBOARD BLOCK DIAGRAM

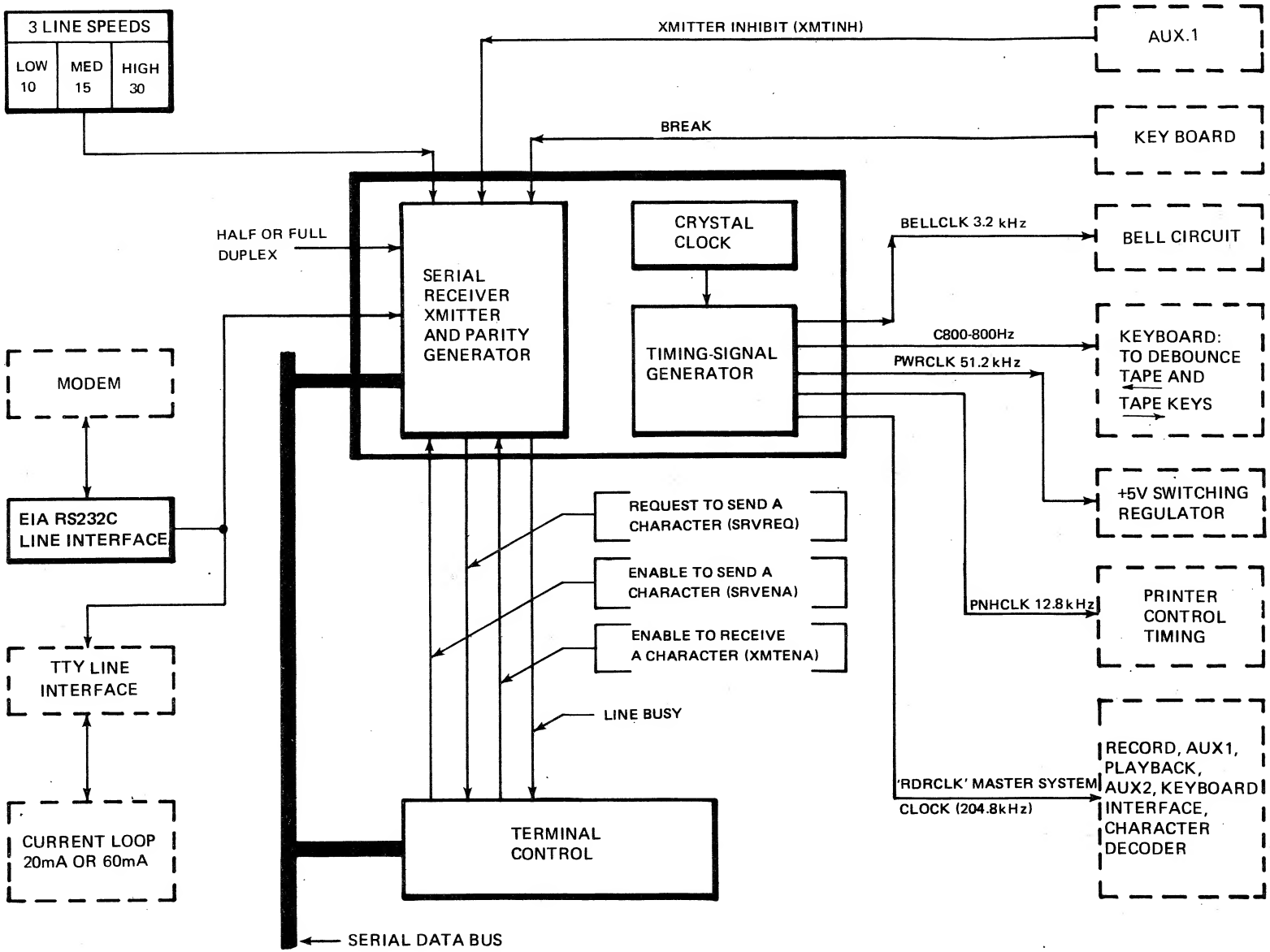

FIGURE 3-2.6. TERMINAL CONTROL, RECEIVER, TRANSMITTER, AND LINE INTERFACE (UP TO 300 baud)

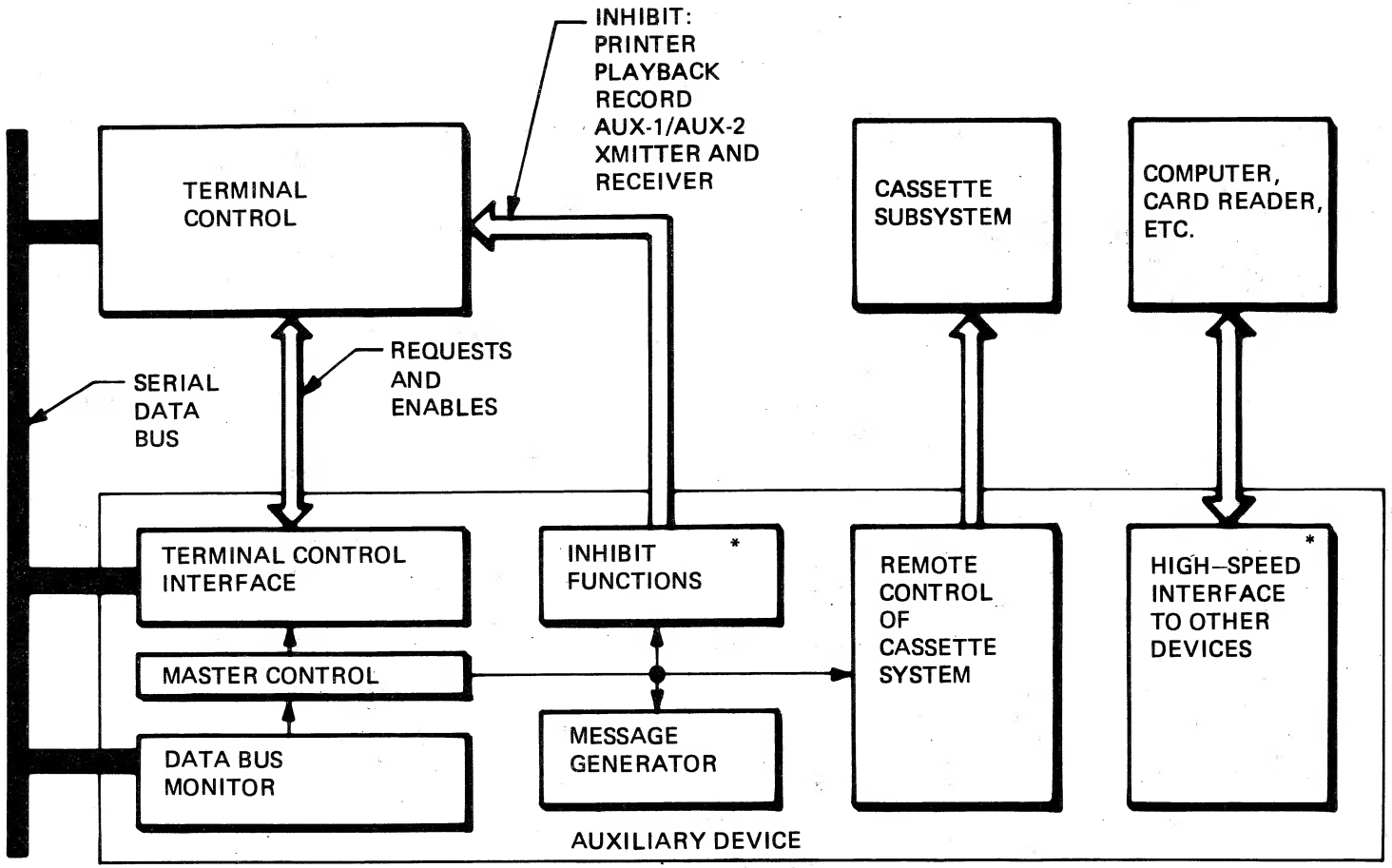

TYPICAL OPTIONS USING AUX DEVICE:

1. AUTO DEVICE CONTROL
2. *AUTOMATIC SEARCH CONTROL
3. REMOTE CONTROL OF THE TERMINAL
4. ANSWER–BACK MEMORY
5. *POLLING OR SELECTIVE CALLING SYSTEM
6. *HIGH–SPEED DATA INTERFACE
7. *FOR DECODING, ENCODING, OR CONVERTING 'CODES'.

*APPLICABLE TO AUX. 1 ONLY

FIGURE 3-2.7. AUXILIARY 1 OR 2 AND TERMINAL CONTROL

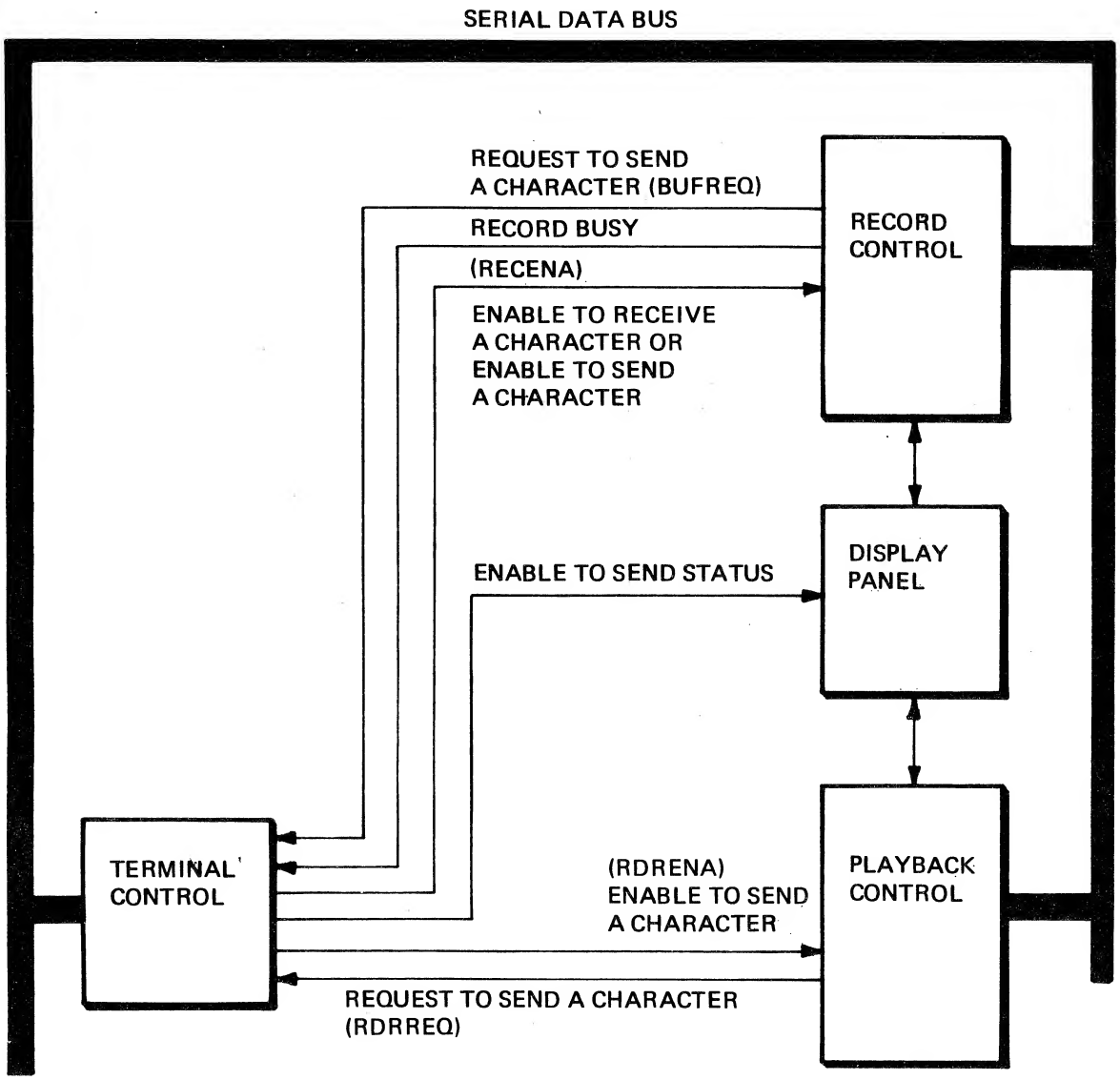

FIGURE 3-2.8. TERMINAL CONTROL, PLAYBACK, RECORD, AND DISPLAY PANEL

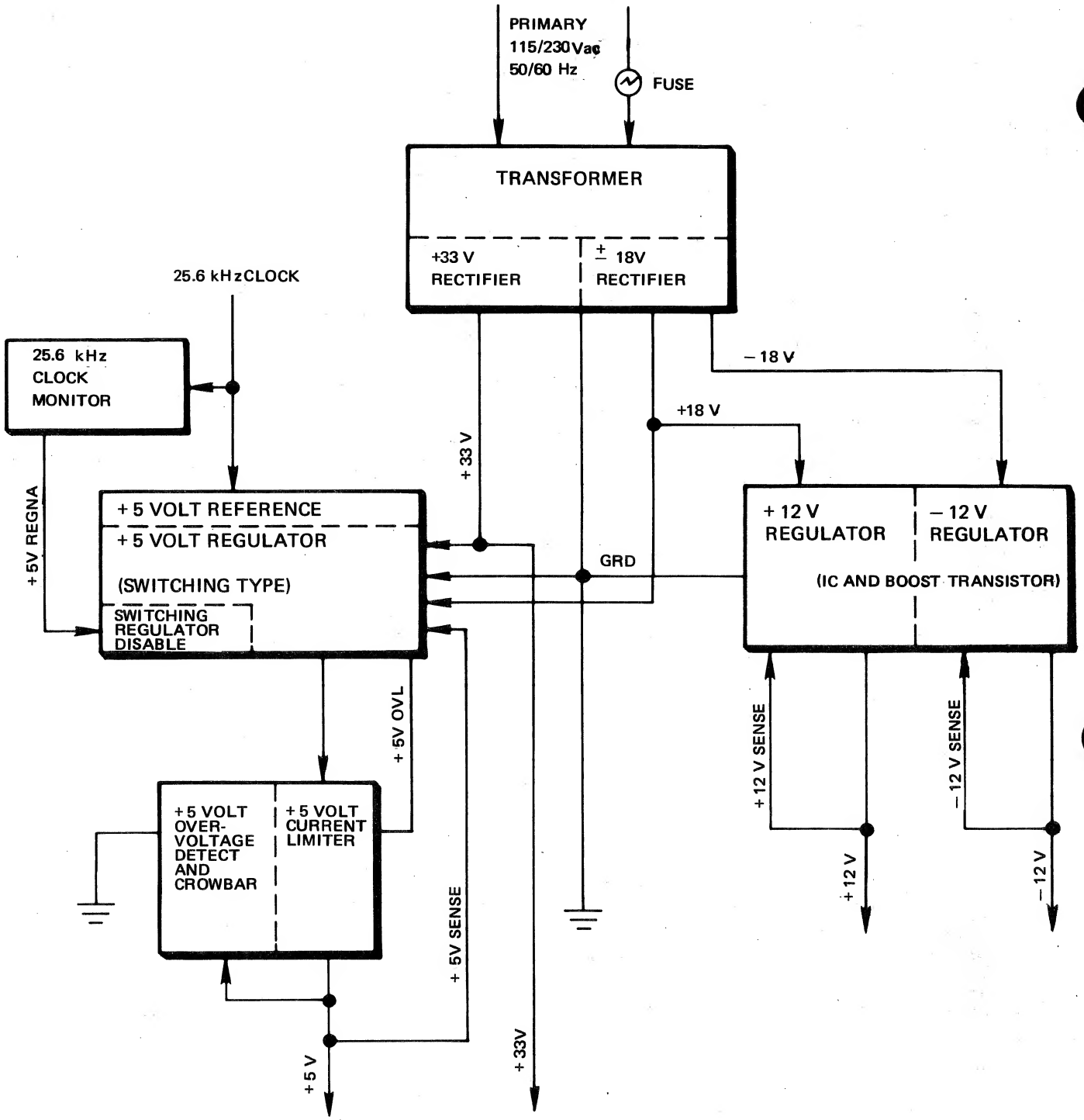

FIGURE 3-3.1. DATA TERMINAL POWER SUPPLY BLOCK DIAGRAM

3-3.1 +33 Volt UNREGULATED SUPPLY. The positive 33 volts for the terminal is obtained directly from the ac power module. The primary line voltage is passed through a stepdown transformer and then rectified. The unfiltered 33 volts goes to the KSR motherboard via a nine-wire cable which plugs into connector J10 on the motherboard. A capacitor and bleedoff resistor on the motherboard filters the 33 volts before it goes to the rest of the terminal. Schematics 959200 and 959188 in Appendix C show the generation of the 33-volt unregulated supply.

3-3.2 +5 VOLT REGULATED SUPPLY. The +5 Volt regulated supply employs a switching-type voltage regulator. The supply consists of four major sections:

a. +5 Volt reference

b. The 5 Volt regulator driver

c. 5 Volt regulator amplifier

d. Various failsafe circuits.

3-3.2.1 Reference. The +5V reference and auxiliary supplies the reference voltage for the +5V switching regulator, the headlift switching regulator, and the limited +5V needed for logic devices on the Control Regulator PC card. The +5 Volt reference and auxiliary is diagrammed on schematic 971451 or 959182* (Control Regulator PC card in Appendix C). The +5V reference is obtained from the +18V unregulated supply using integrated circuit (IC) voltage regulator AR3. The output voltage of the reference supply (5.1 ± 0.02V) is determined by resistor R27 which is selected at unit test. Transistor Q4 acts as a current booster for the IC voltage regulator (AR3).

3-3.2.2 Regulator Driver. The 5V regulator driver uses a voltage comparator (AR4) to compare the +5V output with the reference voltage supplied by the +5V reference supply. A 25.6-kHz clock supplies the switching frequency which holds the comparator off for approximately two-thirds the clock period and allows the comparator to operate for approximately one-third the clock period (period ≅ 40μ sec). When the comparator is operating, if the +5V output does not match the +5V reference input to the comparator, the regulator will supply a drive voltage to the amplifier switch via Q17. When the +5V output again matches the +5V reference, the regulator will turn off the drive to the amplifier switch. The greater the +5V current load, the longer the regulator drive to the amplifier switch will stay on. Q21 and CR6 help power the regulator driver during power UP to prevent it from latching up while power is coming up. A drawing of the +5V regulator driver is shown on schematic 959182* (control/regulator) in Appendix C.

3-3.2.3 Regulator Amplifier. At the command of the regulator driver, the 5V regulator amplifier switches the 33V supply to charge the 5V capacitor on the motherboard. The 33V supply is switched by Q1, with Q2, Q3, and Q4 supplying the drive current to turn on Q1. Q7 receives the command voltages from the regulator driver and turns on the 33V switch by controlling switch drive current transistors Q2, Q3, and Q4. Greater current loads on the +5V supply cause the 5V capacitor to discharge to a lower value during the off time of the regulator driver comparator. Therefore, during the comparator-on time, the switch must stay on longer to recharge the capacitor back to +5 volts.

Figures 3-3.2 through 3-3.5 show the switch output (input to inductor L1) under various 5V current loads. These figures also show +5V output at loads to illustrate a measure of +5V regulation. The 5 volt regulator amplifier is shown on schematic 971444 or 959181* (regulator amplifier) in Appendix C.

3-3.2.4 Failsafe Circuits. Three basic failsafe circuits are associated with the +5V power supply: current limit, overvoltage, and 25.6-kHz clock and clock detect. The current limit circuit consists of Q5 and Q6 on the Regulator Amplifier PC card and Q16 on the Control Regulator PC card. When R11 on the Regulator Amplifier PC card senses too much current (IR drop), Q6 turns on Q5, Q5 turns on Q16 (Control Regulator PC card), and Q16 turns off the regulator drive to the 33V switch. The current limit should be approximately 12 amps for the +5V supply. The overvoltage circuit consists of diode CR14, CR15, Q14, Q22, and Q23 on the Control Regulator card and SCR1 on the motherboard (schematic 959188).

When the +5V output voltage rises to approximately 5.5 volts, Q18 will turn on sufficiently to trigger the SCR on the motherboard and cause Q22 and Q23 to disable the regulator driver via CR15. When the SCR triggers the +5V output bus is shorted to ground by the SCR The actual +5V output will then drop zero volts until the terminal power is switched off and then back on. The 25.6 kHz clock detect circuit consists of Z2, Q19, Q15, and Q20 on the Control/Regulator PC card (schematic 959182*). As long as the 25.6-kHz clock is present, a retriggerable oneshot (Z2) is continually triggered. The oneshot output Q keeps Q19 on, and the oneshot output Q keeps Q20 off. As long as Q19 is on, Q15 is off, and the regulator driver is enabled. Since Q20 is kept off, the motor drivers remain enabled and no terminal power reset (PWRRST–) occurs. If at anytime the 25.6-kHz clock is lost, the +5V regulator driver will be disabled, the motor drivers will be disabled, and a terminal

*This PC card is obsolete.

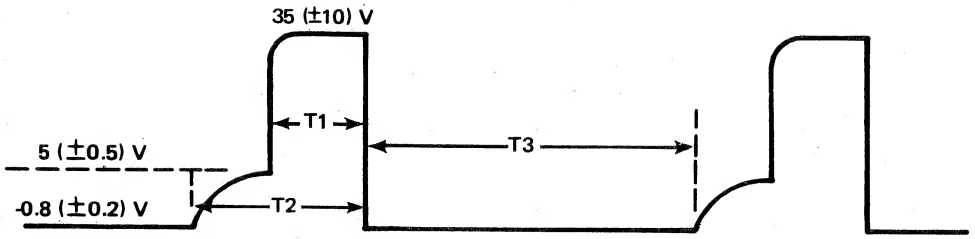

T1 = 7 (±1) μSEC
T2 = 12 (±2) μSEC
T3 = 37 (±5) μSEC

NOTES: A. + 5 V OUTPUT (PIN 20) SHOULD BE 5.15 (±0.05) V.
B. SWITCHING WAVEFORM INTO INDUCTOR L1 SHOULD APPEAR AS ABOVE.

FIGURE 3-3.2. WAVEFORM, + 5 VOLTS AT NO LOAD

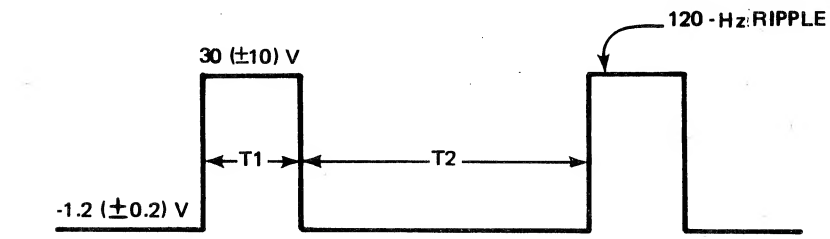

T1 = 10 (±2) μSEC
T2 = 37 (±5) μSEC

NOTES: A. + 5V OUTPUT (PIN 20) SHOULD BE 5.00 (- 0.05, + 0. 15) V.
B. SWITCHING WAVEFORM INTO INDUCTOR L1 SHOULD APPEAR AS SHOWN ABOVE.

FIGURE 3-3.3. WAVEFORM, + 5 VOLTS AT 5-AMPERES LOAD

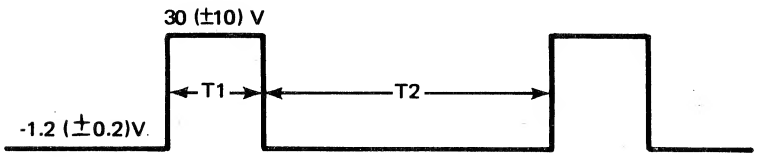

T1 = 12 (±2) μSEC
T2 = 35 (±5) μSEC

NOTES: A. TEST + 5V OUTPUT (PIN 20) SHOULD BE 4.9 (-0.1, + 0.25) V.
B. SWITCHING WAVEFORM INTO INDUCTOR L1 SHOULD APPEAR AS ABOVE.

FIGURE 3-3.4. WAVEFORM, + 5 VOLTS AT 10-AMPERES LOAD

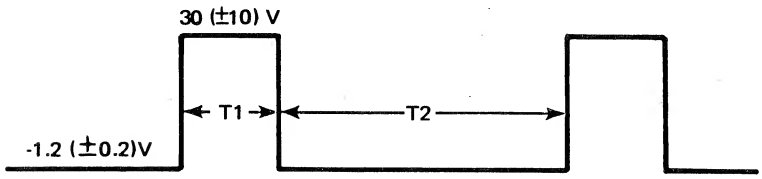

T1 = 8 (±2) μSEC
T2 = 39 (±5) μSEC

NOTES: A. + 5V OUTPUT (PIN 20) SHOULD BE 3.0 (±0.5) V.
B. SWITCHING WAVEFORM INTO L1 SHOULD APPEAR AS ABOVE.
C. LOAD IS 0.25 ohm.

FIGURE 3-3.5. WAVEFORM, +5 VOLTS AT CURRENT LIMIT

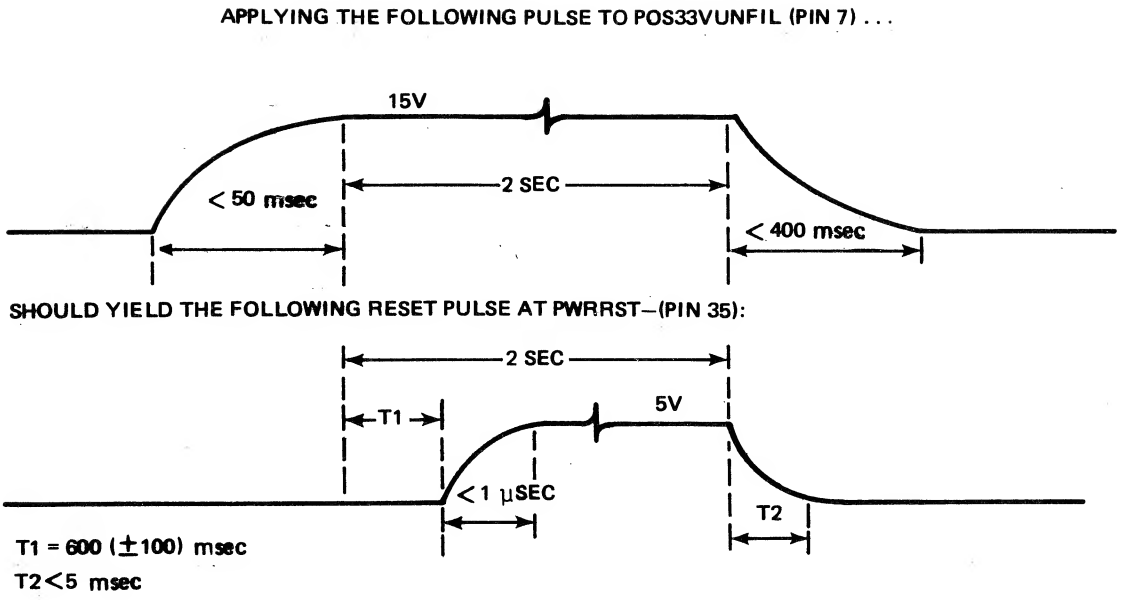

FIGURE 3-3.6. POWER RESET (PWRRST–) SEQUENCE WAVEFORM

power reset will occur. A clock circuit, located on the Control/Regulator PC card, provides the 25.6-kHz clock used by the switching regulators. It consists of a free running multivibrator and a divide-by-two flipflop. If at any time the PWRCLK (51.2-kHz) is lost, the switching regulators will still have a clock, approximately 25.6-kHz after passing through the divide-by-two flipflop (Z1).

3-3.3 +12 VOLT REGULATED SUPPLY. The +12 volt regulated supply is located on the Control/Regulator PC card. It consists of IC voltage-regulator AR1 and two current-booster transistors Q2 and Q1. The IC voltage regulator transforms the +18V unregulated supply to a +12V regulated supply with an approximate 2.5-amp current limit.

3-3.4 -12V REGULATED SUPPLY. The -12 volt regulated supply, located on the Control/Regulator PC card, consists of integrated circuit (IC) voltage regulator AR2 and current booster transistor Q3. The IC voltage regulator transforms the -18V unregulated supply to a -12V regulated supply with an approximate 500 mA current limit.

3-3.5 -5.6V SUPPLY. A -5.6V supply provided is used only by the voltage comparators of the various switching regulators. The -5.6V supply, located on the Control/Regulator card, consists of zener diode CR9 and filter capacitor C26. Current from the supply is limited to a few milliamperes.

3-3.6 POWER-ON RESET CIRCUIT. A power-on reset circuit on the Control/Regulator PC card holds the terminal in a reset state during power up and resets the terminal when a momentary power failure occurs. Three field effect transistors (Q12, Q13, and Q14) hold the power reset bus (PWRRST–) at ground during a power up until turned off by Q11 and Q24. Q11 is turned on by Q10 which is controlled by a voltage dependent on an RC time constant set by R28 and C17. Momentary power failures are detected by Q8, which then turns off. When Q8 turns off, Q9 goes on and shorts C17 to ground, turning off Q10 and causing the power reset bus to be grounded by the three field effect transistors, Q12, Q13, and Q14. When the power failure ends and power is reapplied to the terminal, Q8 again goes on and Q9 goes off. C17 again charges through R28; approximately 600 msec later, the power reset bus (PWRRST–) again is removed from ground. A typical power reset sequence waveform is shown in Figure 3-3.6.

3-4 PRINTER SYSTEM.

The printer consists of seven major parts:

a. Paper drive mechanism

b. Printer drivers

c. Printer control logic

d. Character decoding

e. Printhead

f. Printhead interface

g. Printhead compensation circuit.

The printer drivers are located on the Regulator/Amplifier PC card (slot A10), the printer control logic on the Printer Control PC card (slot A2), the character decoding on the Code PC card (slot A1), the printhead interface on the Printer Code PC card (slot A1 on the code card), and the printhead compensation circuit also on Code PC card (slot A1). A block diagram of the printer system is shown in Figure 3-4.1.

3-4.1 PAPER DRIVE MECHANISM. The paper drive mechanism feeds the printer paper and moves the printhead to printout information fed to the terminal. Major components include:

a. The head stepping motor

b. Paper advance motor

c. Head lift solenoid

d. Margin limit switch.

Adjustments for head lift, head damping, and head return speed are described in Section V.

3-4.2 PRINTER DRIVERS. Three driver groups control the motion of the printer mechanism:

a. Head step motor drivers

b. Paper step motor drivers

c. Head lift solenoid driver.

All three drives are located on the Regulator/Amplifier PC card (slot A10; see schematic 971444 or 959181*). The head step motor drivers and paper step motor drivers (A1 and A2 on schematic 959181*) are nearly identical circuits (e.g., inputs and outputs are different). Each set of motor phase drivers (three per set) utilizes the same type switching regulator used by the +5V power fupply. The Printer Control PC card (slot A2; see schematic 981312 or 959175*) provides the input signals (commands) telling each driver when to institute an action. When the head or paper motor drivers receive a signal telling them a motor phase to step to (e.g., HPHA, HPHB, HPHC, PPHSA, PPHSB, PPHSC) and giving them the command to step (HPC, PACA), comparators A1AR1 or A2AR1 turn on the appropriate motor phase driver transistor (Q1, Q4, Q7) during the comparator-on time allowed; by the switching regulator 25.6 kHz switch clock. During the comparator-on time, the comparator (AR1) compares the input reference voltage from the Printer Control PC card with the voltage across R2 produced by the current flowing through a motor phase. When the current in a motor phase produces sufficient voltage, the comparator (AR1) turns off and stops the drive to the motor phases, and this reduces the motor torque. The object of the input commands (HPC, PACA) is to keep the current through the motor phases constant (via the switching regulator), producing a constant number of ampere turns, and thus a constant force to step (accelerate and decelerate) the motors. When either the head step driver or the paper step driver is not in the process of moving the head or paper, respectively, the drivers keep a "holding current" in one motor phase winding to keep the motor shafts from moving inadvertently. The amount of holding current is also controlled by the switching regulator via comparator AR1 and is determined by the input signals (HPC, PACA) from the Terminal Control PC card. Transistor Q10 (collector) in both A1 and A2 should be switching (between 0V and 5V) at all times except during a power reset.

The head lift solenoid driver is also a switching-type regulator similar to both motor driver regulators. It provides current to the head lift solenoid to lift the printhead during a carriage return or paper advance. The input signal (command) to initiate the head lift (LIFTHEAD) is provided by the printer control PC card. Comparator AR1, during the comparator-on time allowed by the switching clock (25.6 kHz), compares the input reference voltage (LIFTHEAD) with the voltage across R30 produced by the current flowing in the head lift solenoid. When the current in the solenoid produces sufficient voltage, the comparator (AR1) turns off the drive to the solenoid to maintain solenoid current at the proper value. When the head lift signal (LIFTHEAD) is not present, R16

* This PC card is obsolete.

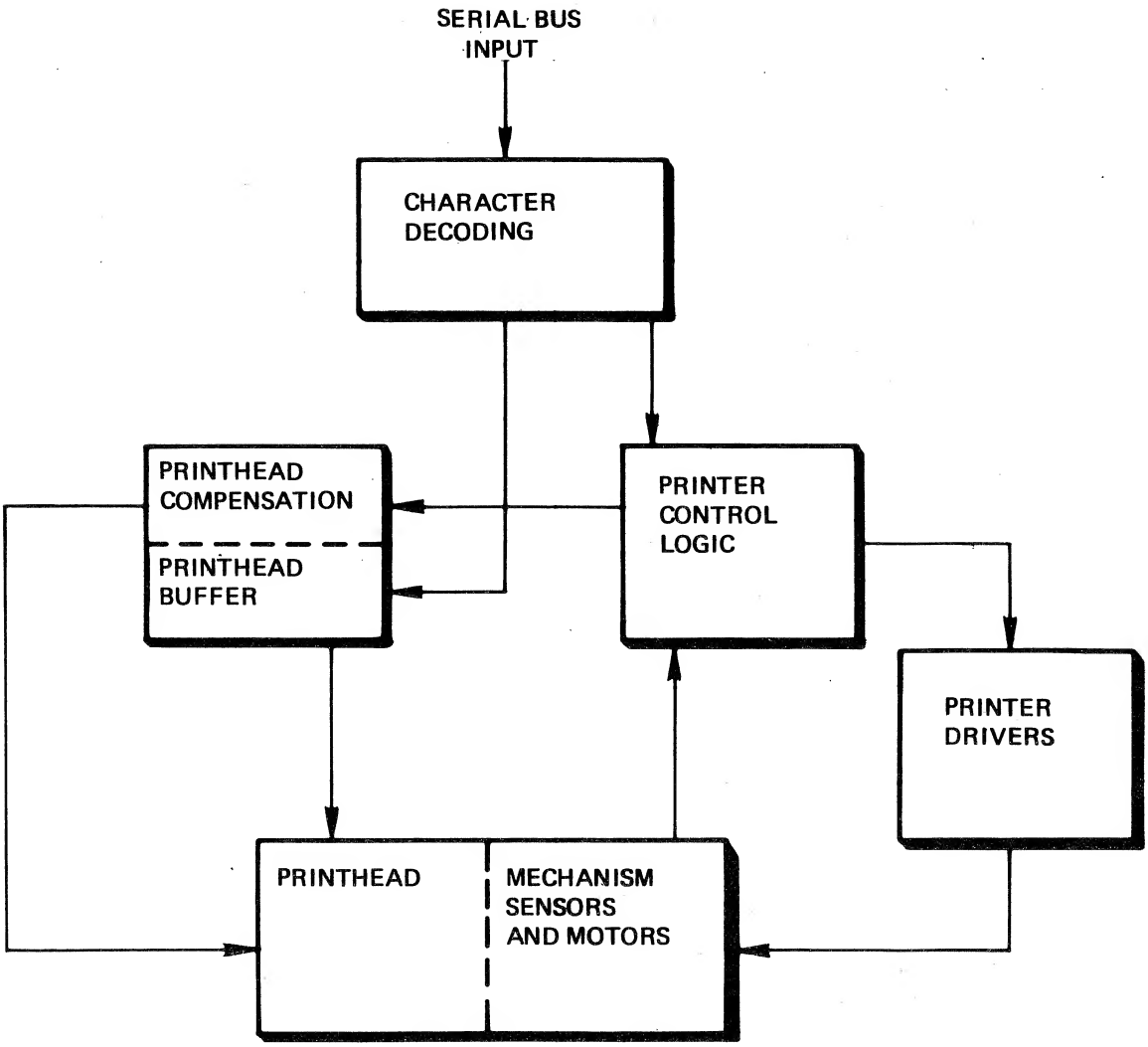

FIGURE 3-4.1. PRINTER SYSTEM BLOCK DIAGRAM

injects sufficient current to the comparator to ensure that it remains in the off state; therefore, no current is provided to the head lift solenoid. The collector of Q13 should switch (between 5V and 33V) only when the LIFTHEAD signal is present.

3-4.3 PRINTER CONTROL LOGIC. The Printer Control PC card (see Figure 2-1.1) contains logic and analog circuitry to control the following printer subsystem functions.

a. Stepping the printhead to the right (print or space)

b. Stepping the printhead to the left (backspace)

c. Slewing the printhead to the left margin (carriage return)

d. Advancing paper (line feed)

e. Lifting the printhead during paper advance and carriage return

f. Sounding the end-of-line warning.

The character decode circuitry of the Printer Code PC card and the keyboard TAPE, TAPE, and PAPER ADV keys provide command inputs to the Printer Control. Basic timing signals are provided by the Transmit/Receive PC card clock dividers. Limit switches and position sensors on the drive mechanism assembly provide status and feedback control signal input.

Printer Control provides output signals to the Regulator Amplifier stepping motor and solenoid drivers and to the printhead compensation and bell circuits of the Code PC card. It also supplies "busy" signal outputs to the Terminal Control.

3-4.3.1 Functional Blocks. The Printer Control consists of the following functional blocks.

a. Synchronous input register - accepts carriage return, line feed, backspace and print/no-print commands from the printer code character decoder.

b. Asynchronous input register accepts space (TAPE), backspace (TAPE), and paper advance (simultaneous line feed and carriage return) commands from the keyboard discrete function (unencoded) keys.

c. Automatic carriage return generator initiates line feed and carriage return if a print command is received while the printhead is at the right margin.

d. Character timer - counts down the 12.8-kHz clock to time each character period in 5-msec increments (character period is defined as the time required to perform a space, backspace, or print operation: 30 msec). Line feed is performed in one or two character periods, depending on whether single or double line spacing is selected. Note that the printer control character period is independent of the terminal communication rate.

All command inputs are inhibited while the character timer is counting.

e. Carriage return timer - counts down the 800-kHz clock to provide a "busy" delay during execution of carriage return. The print command and all asynchronous command inputs are inhibited during the carriage return delay. The delay terminates 190 msec after initiation of carriage return or 10 msec after the printhead reaches the left margin (e.g., after power turn on or an equipment malfunction), whichever is greater.

f. Synchronizing register - synchronizes input commands to the 12.8-kHz clock and starts the character period and carriage return timers as required. Associated gating inhibits invalid commands (e.g., carriage return or backspace when the printhead is at the left margin).

g. Column counter and decoder - stores and controls the printhead position. The counter counts up (module 3) to 81 as the head steps to the right and down to 0 as the head moves to the left during backspace or carriage return. The counter is cleared to zero whenever the printhead is at the left margin. Decoder outputs select the head stepping motor phases to be energized, enable the end-of-line alarm, initiate the automatic carriage return from the right margin, and enable operation of the carriage return brake. An input/output list for the

printer control read-only-memory is shown in Table 3-4.1.

h. Damping controller - provides closed loop control of printhead deceleration when stepping to the right or left to minimize acoustic noise and settling time. When triggered by a position sensor on the stepping motor assembly, a monostable momentarily applies power to the lagging phase of the stepping motor to develop the required retrotorque.

i. Carriage return controller - receives pulses from a second position sensor (tachometer) on the head stepping motor and synchronizes them to the 12.8kHz clock to drive the column counter during carriage return. The sensor pulses are phased so that the head stepping motor is operated in a slewing (continuous rotation) rather than a controlled (stepping) mode. When the printhead has returned to column 12, the controller switches the column counter clock from the leading to the trailing edge of the tachometer pulse which then begins to decelerate the printhead.

   The controller also checks for the absence of tachometer pulses which indicate premature stopping of the printhead. When this occurs the controller enters a "failsafe" mode, reducing power and supplying clocks at 20-msec intervals to return the printhead to the left margin. Failsafe carriage return is initiated automatically when power is switched on.

j. Carriage return brake controller - provides closed-loop control of printhead deceleration as the head approaches the left margin, maintaining carriage return time and acoustic noise within specified limits independent of friction, temperature, and line voltage variations. The controller operates by integrating tachometer pulses, comparing the resulting voltage to a reference ramp voltage, and applying retrotorque current to the stepping motor when the difference exceeds a preset limit.

k. Paper feed counter - controls power to the paper advance motor phases. Paper is advanced one line each time the counter cycles through its three-state sequence, sequentially energizing the three stepping motor phases.

3-4.3.2 Printer Control Timing Diagrams. Timing diagrams for various printer control functions are shown in Figures 3-4.2 through 3-4.6.

3-4.4 CHARACTER DECODING, ASCII/BAUDOT. The printer decode block diagram is shown in Figure 3-4.7. When a printer enable is detected, a flipflop is set to allow the system clock (SCLK) to clock data on the data bus into the data buffer. When the data has been clocked in, the SCLK is disabled and the pattern counter is enabled. The pattern counter clocks the pattern from the MOS character generator, and counts the number of patterns sent to the printhead buffer/driver. If the first pattern is a ONE, the character is a control character so the pattern is also clocked to the control decode. Printer control monitors the flipflop which tells if the character is a print character or a control character. When the printer decode tells the printer control to 'GO', printer control either prints the character in the printhead buffer/driver, or does the control function in the control decode register.

For ASCII operation, resistors R46 and R48 are installed; resistors R47, R49, and R53 are left open; and the ASCII character generator is used. For Baudot operation the Baudot character generator is used, resistor R47 is installed, and resistors R46 and R48 are left out. For Baudot U.S. figures, R49 is also installed, and R53 is open. For Baudot U.K. figures, R53 is installed, and R49 is open.

A flow chart for the character decoding is shown in Figure 3-4.8, and a timing diagram is shown in Figure 3-4.9. The ASCII code set is listed in Table 3-4.2, and the Baudot code set is listed in Table 3-4.3.

3-4.5 PRINTHEAD. The printhead consists of a matrix of 35 (5 x 7) separate elements and a diode on a monolithic chip. The chip is mounted on a heatsink and is connected to the Printhead Interface PC card with a flat cable connected to a PC board. Mounted on this board are the balance, slow, and fast resistors used by the printhead compensation circuit. The printhead is controlled by switching both (1) base drive to each element and (2) print voltage to the entire head (PVOLT). The diode voltage on the chip varies with temperature, and the compensation circuit uses this voltage to control print voltage (PVOLT). The balance, slow, and fast resistors are used to match the printhead characteristics to the compensation circuit.

3-4.5.1 Printhead Interface. The Printhead Interface PC card takes serial data (35 bits) from the character generator and converts it to parallel data with five 7-bit shift registers. Each bit is then buffered and sent to the proper element (base lead) on the printhead.

TABLE 3-4.1 PRINTER CONTROL READ ONLY MEMORY INPUT/OUTPUT

WORD	INPUTS						OUTPUTS							
	BINARY SELECT													
	A	B	C	D	E	ENABLE	Y_1	Y_2	Y_3	Y_4	Y_5	Y_6	Y_7	Y_8
0	L	L	L	L	L	L	H	L	L	H	H	L	L	H
1	H	L	L	L	L	L	L	H	L	H	L	H	L	H
2	L	H	L	L	L	L	L	L	H	H	L	L	H	H
3	H	H	L	L	L	L	L	L	L	H	H	L	L	H
5	H	L	H	L	L	L	L	H	H	H	L	H	L	H
6	L	H	H	L	L	L	L	L	L	L	L	L	H	L
7	H	H	H	L	L	L	L	L	L	H	H	L	L	H
8	L	L	L	H	L	L	H	L	L	H	L	L	H	H
9	H	L	L	H	L	L	L	H	L	H	H	L	L	H
10	L	H	L	H	L	L	L	L	H	H	L	H	L	H
11	H	H	L	H	L	L	L	L	L	H	H	L	L	H
12	L	L	H	H	L	L	H	L	H	H	L	L	H	H
13	H	L	H	H	L	L	L	H	H	H	H	L	L	H
14	L	H	H	H	L	L	L	L	L	L	L	H	L	L
15	H	H	H	H	L	L	L	L	L	H	H	L	L	H
16	L	L	L	L	H	L	L	H	H	L	H	L	L	H
17	H	L	L	L	H	L	L	L	L	H	L	H	L	H
18	L	H	L	L	H	L	H	L	L	H	L	L	H	H
19	H	H	L	L	H	L	L	L	L	H	H	L	L	H
20	L	L	H	L	H	L	L	H	L	H	H	L	L	H
21	H	L	H	L	H	L	L	L	H	H	L	H	L	H
22	L	H	H	L	H	L	H	L	H	H	L	L	H	H
23	H	H	H	L	H	L	L	L	L	H	H	L	L	H
24	L	L	L	H	H	L	L	H	H	L	H	H	L	H
25	H	L	L	H	H	L	L	L	L	H	L	H	H	H
26	L	H	L	H	H	L	H	L	L	H	H	L	H	H
27	H	H	L	H	H	L	L	L	L	H	H	L	L	H
28	L	L	H	H	H	L	L	H	L	H	H	H	L	H
29	H	L	H	H	H	L	L	L	H	H	L	H	H	H
30	L	H	H	H	H	L	H	L	H	H	H	L	H	H
31	H	H	H	H	H	L	L	L	L	H	H	L	L	H
ALL	X	X	X	X	X	H	H	H	H	H	H	H	H	H

(L = low, H = high)

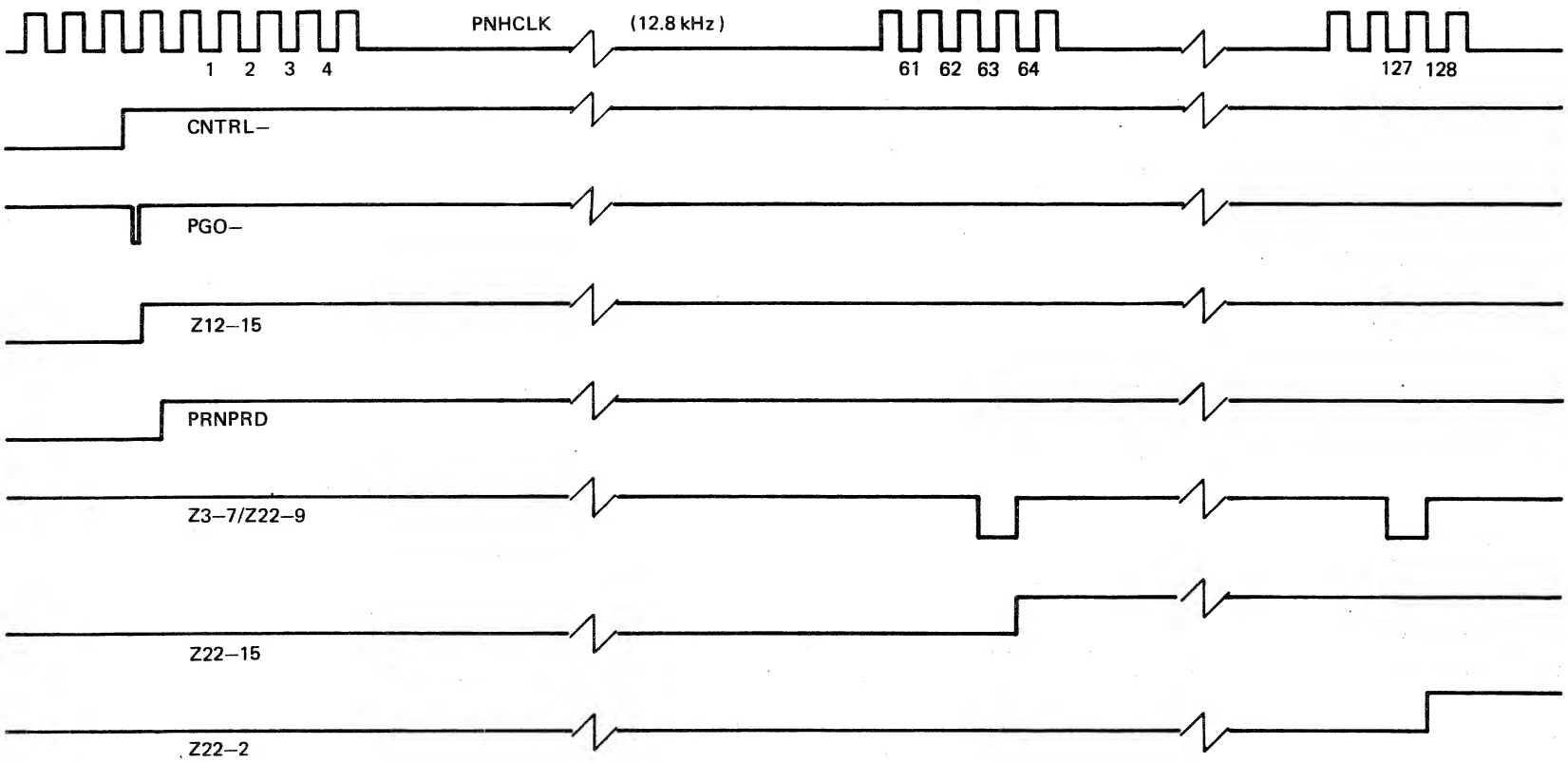

FIGURE 3-4.2. PRINTER CONTROL TIMING SYNCHRONIZATION

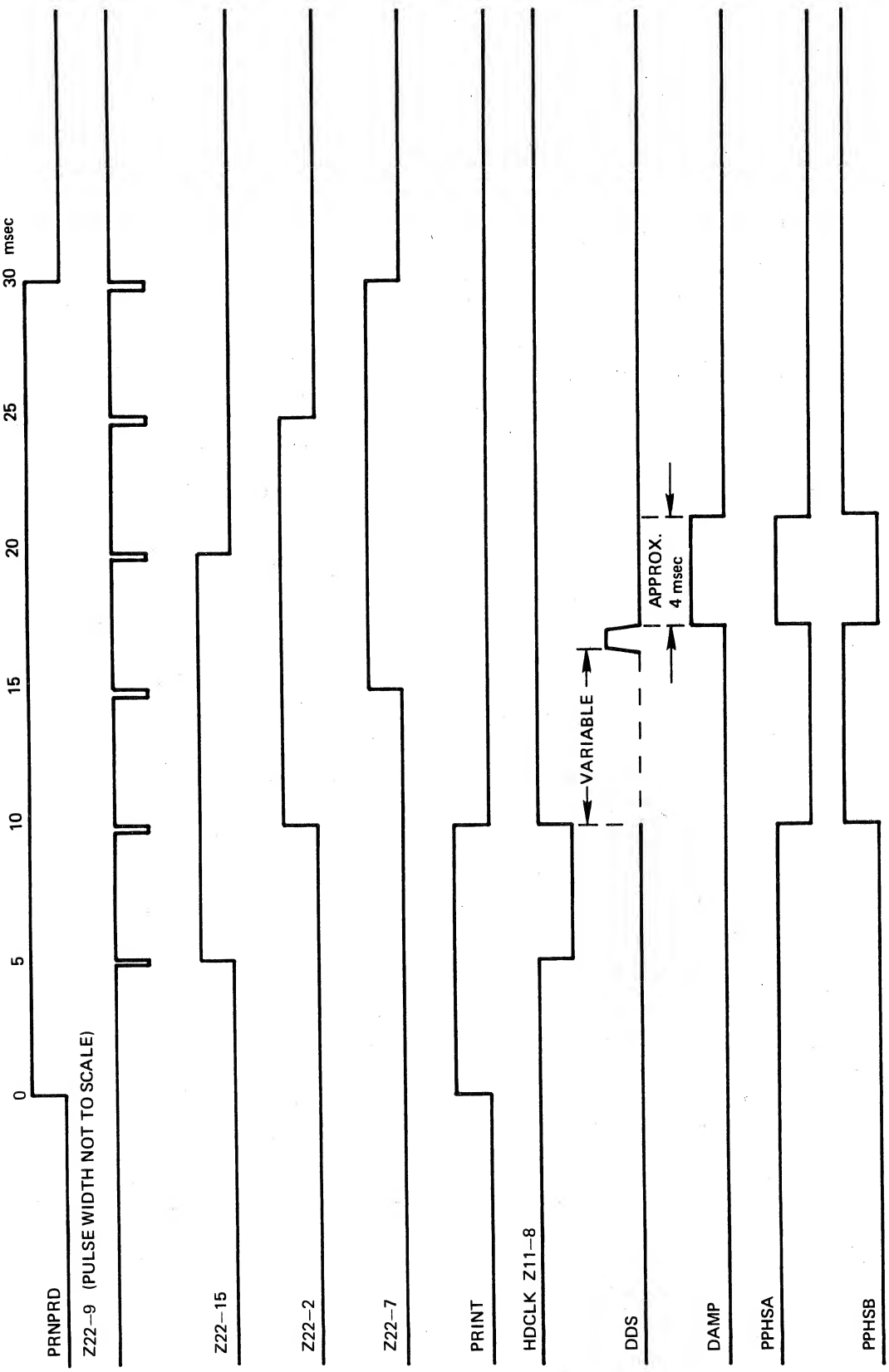

FIGURE3-4.3. PRINTER CONTROL TIMING, PRINTING IN COLUMNS 1,4, ETC.

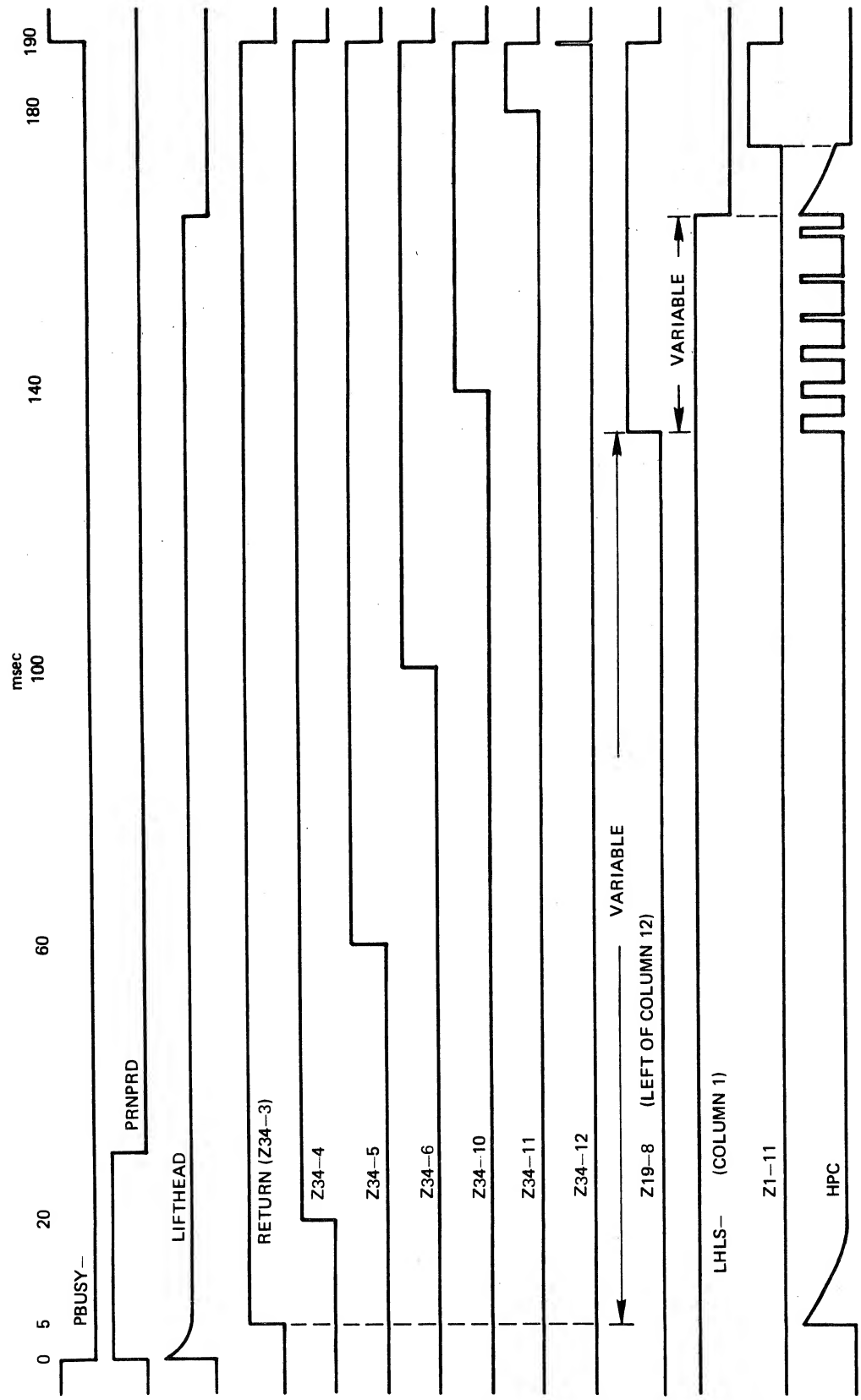

FIGURE3-4.4. PRINTER CONTROL, NORMAL CARRIAGE RETURN TIMING DIAGRAM

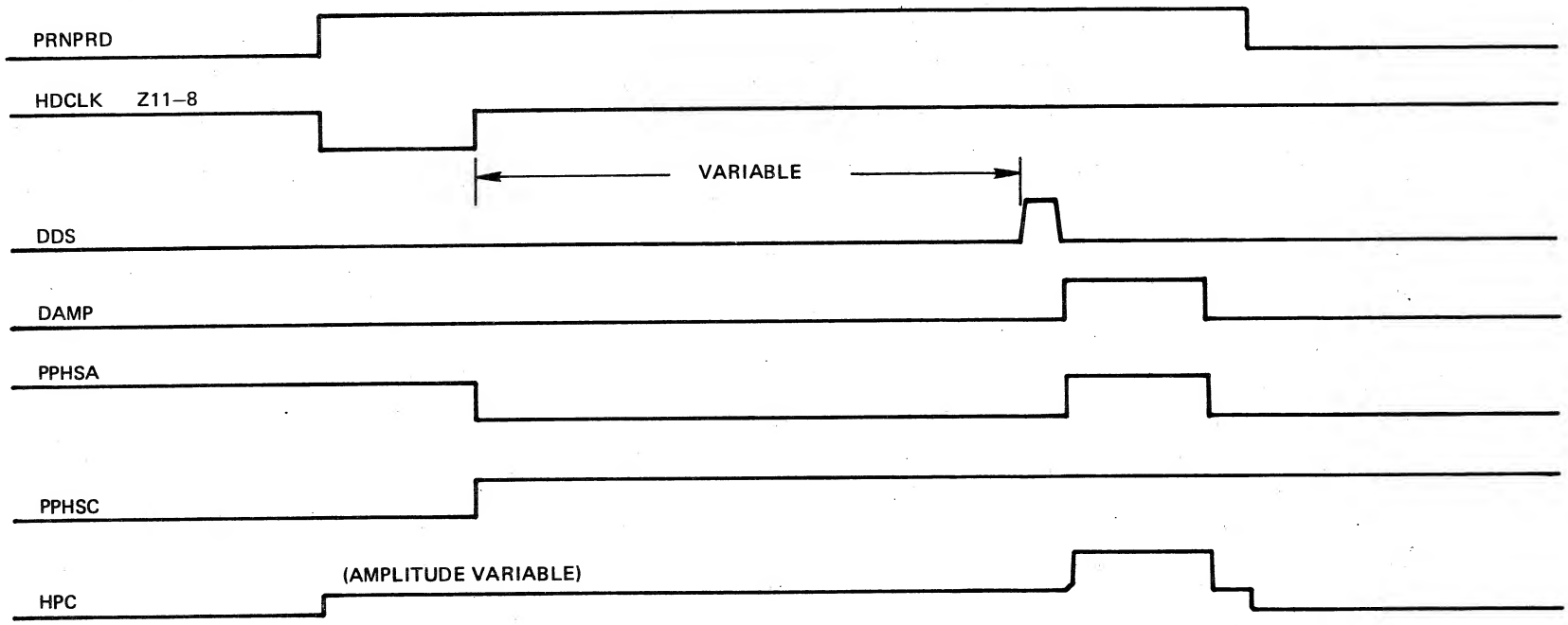

FIGURE 3-4.5. PRINTER CONTROL TIMING, BACKSPACE FROM COLUMNS 4, 8, ETC.

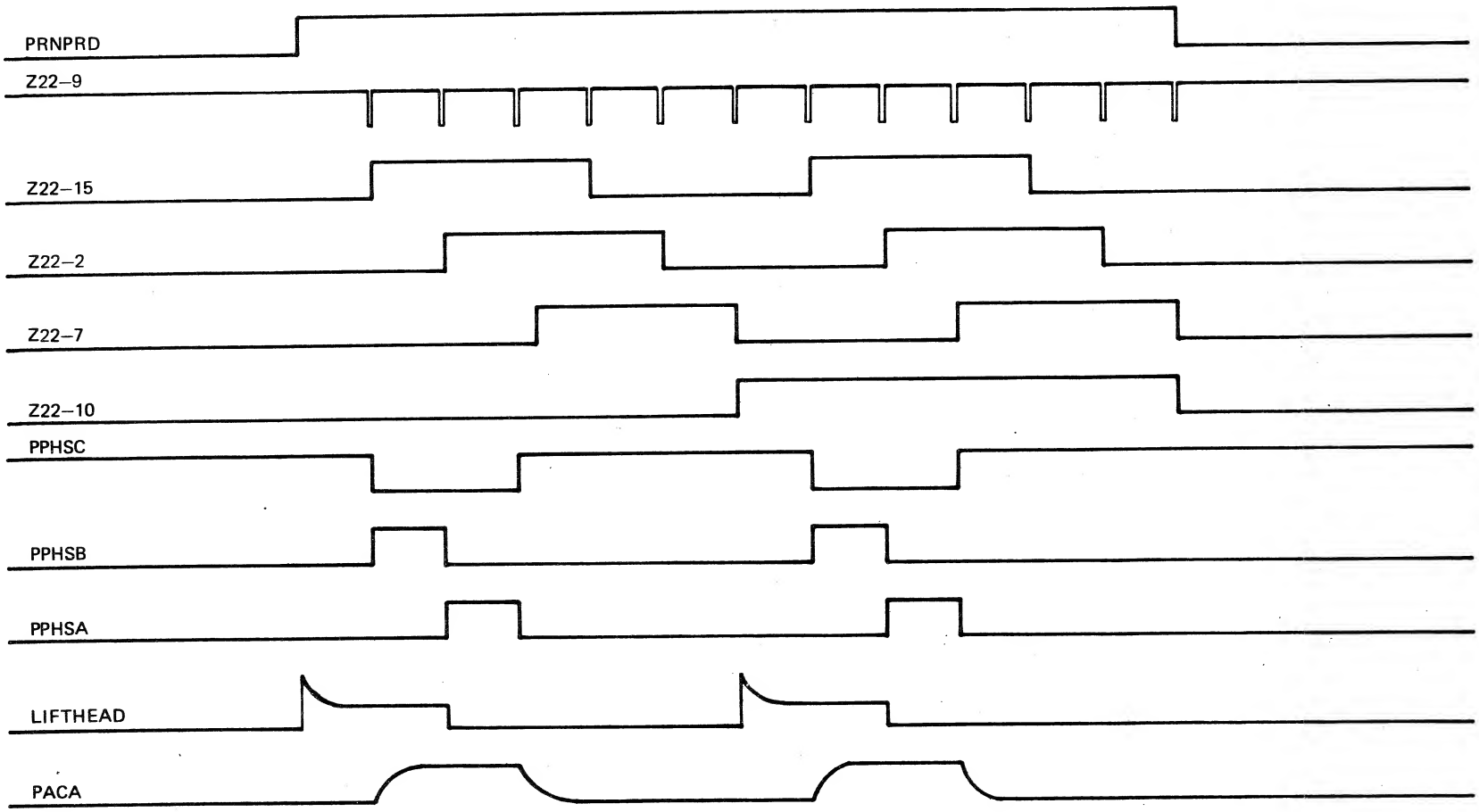

FIGURE 3-4.6. PRINTER CONTROL, LINE FEED TIMING DIAGRAM (DOUBLE LINE SPACING)

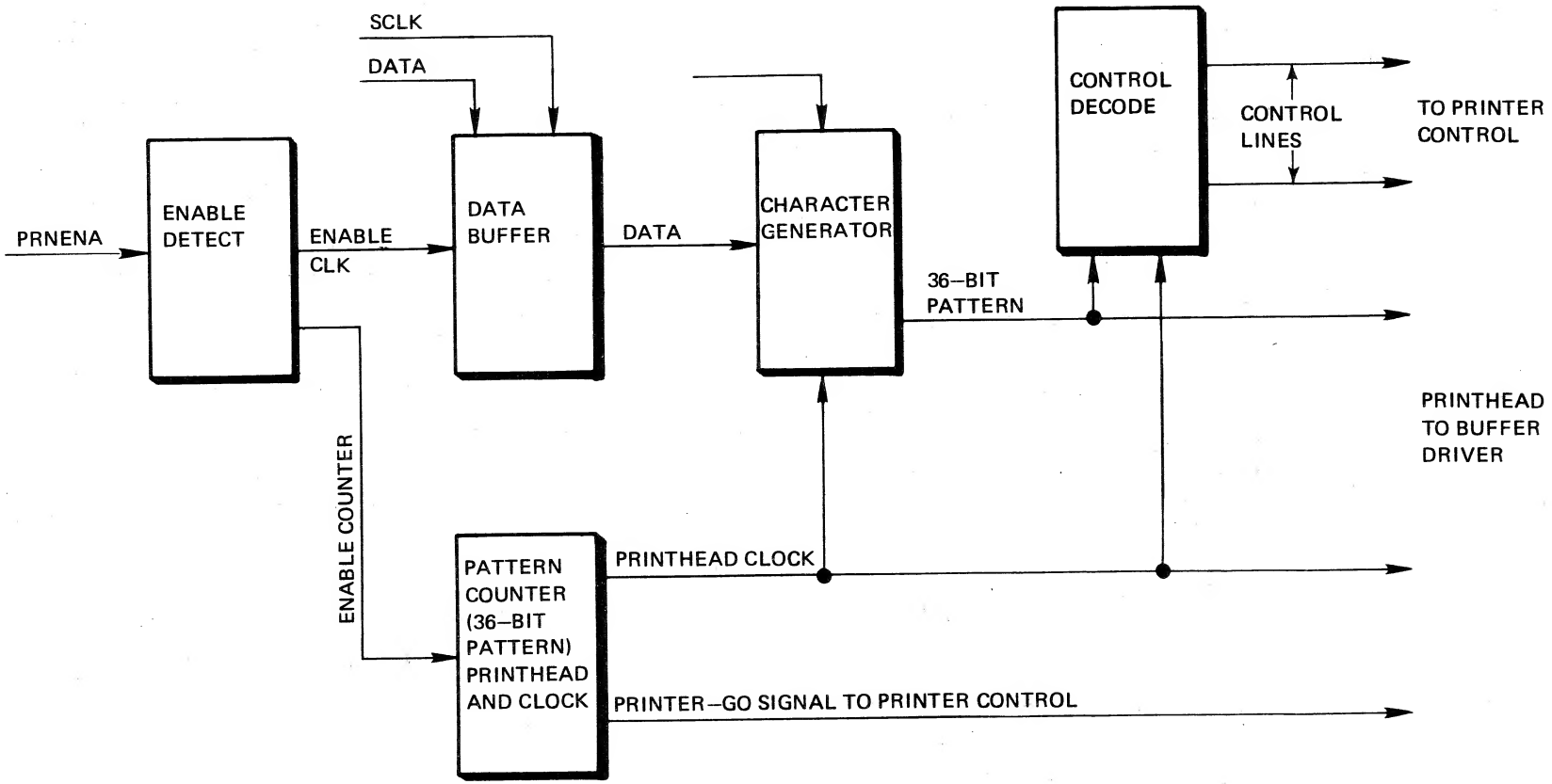

FIGURE 3-4.7. PRINTER DECODE BLOCK DIAGRAM

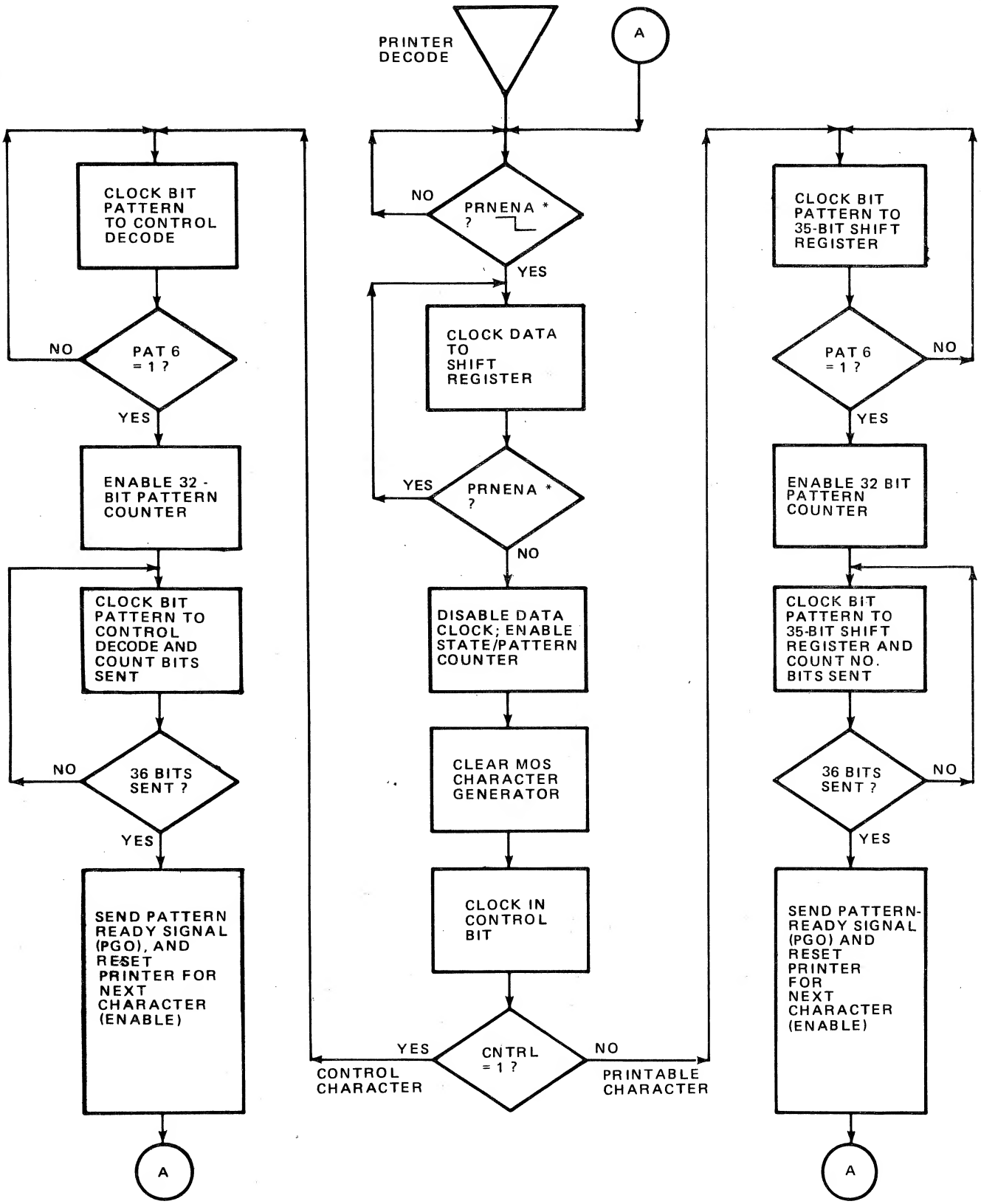

FIGURE 3-4.8. PRINTER CONTROL CHARACTER DECODING FLOW CHART

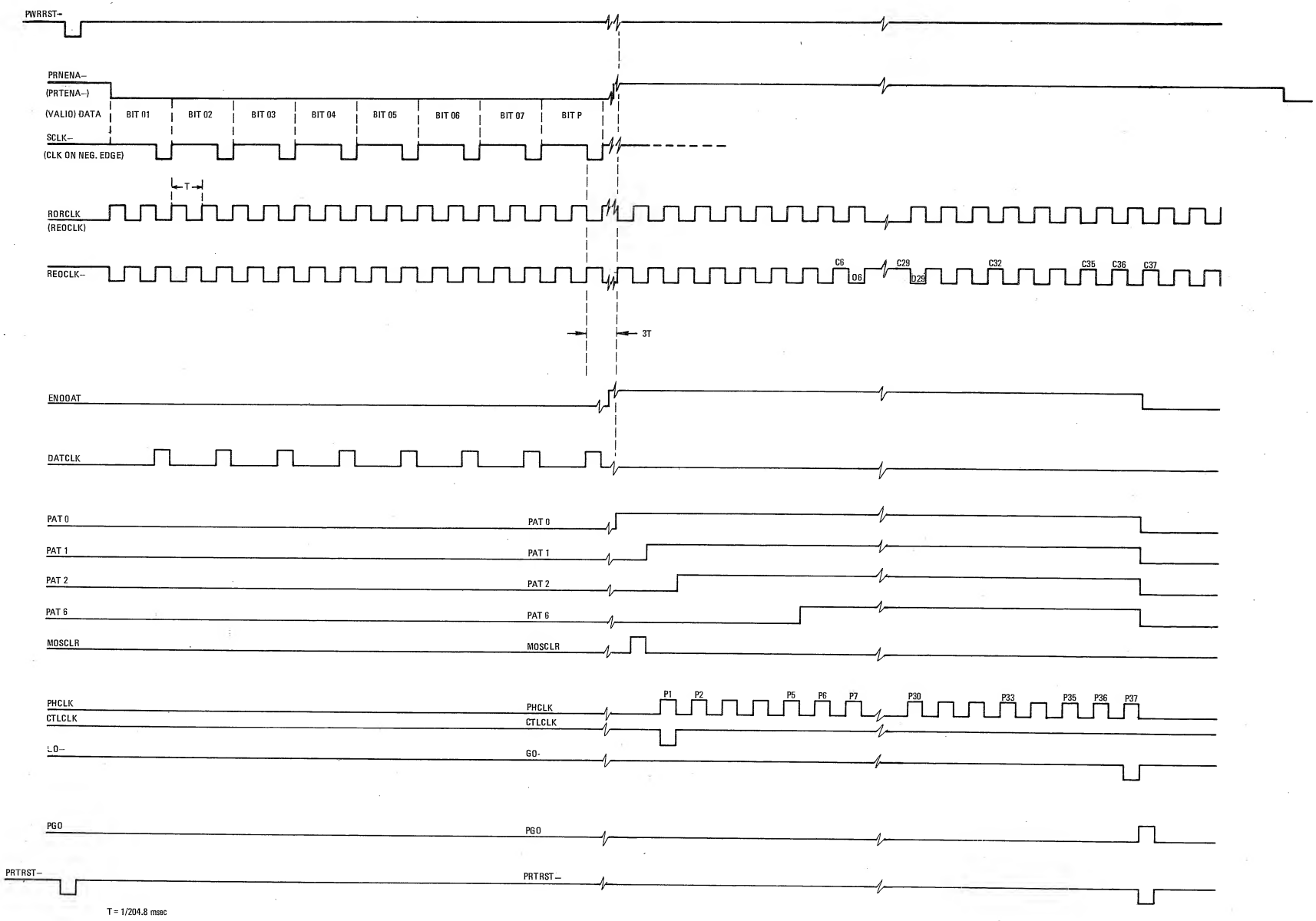

FIGURE 3-4.9. PRINTER CONTROL CHARACTER DECODING TIMING DIAGRAM

TABLE 3-4.2 ASCII CODE SYSTEM AND CHARACTER SET

b_4 b_3 b_2 b_1	b_7→0 b_6→0 b_5→0	0 0 1	0 1 0	0 1 1	1 0 0	1 0 1	1 1 0	1 1 1
0 0 0 0		NUL	DLE	SPACE	0	@	P	`	p
0 0 0 1		SOH	DC1	!	1	A	Q	a	q
0 0 1 0		STX	DC2	"	2	B	R	b	r
0 0 1 1		ETX	DC3	#	3	C	S	c	s
0 1 0 0		EOT	DC4	$	4	D	T	d	t
0 1 0 1		ENQ	NAK	%	5	E	U	e	u
0 1 1 0		ACK	SYN	&	6	F	V	f	v
0 1 1 1		BEL	ETB	'	7	G	W	g	w
1 0 0 0		BS	CAN	(	8	H	X	h	x
1 0 0 1		HT	EM	)	9	I	Y	i	y
1 0 1 0		LF	SUB	*	:	J	Z	j	z
1 0 1 1		VT	ESC	+	;	K	[	k	{
1 1 0 0		FF	FS	,	<	L	\	l	¦
1 1 0 1		CR	GS	-	=	M	]	m	}
1 1 1 0		SO	RS	.	>	N	^	n	~
1 1 1 1		SI	US	/	?	O	_	o	DEL

PRINTABLE CHARACTER

AUXILIARY DEVICE CONTROL CHARACTER

PRINTER CONTROL CHARACTER

CODES GENERATED BY KEYBOARD, BUT NO ACTION TAKEN

USASCII CONTROL CHARACTERS
(From USA Standards Institute Publication X3.4–1968)

ACK	acknowledge
BEL	bell
BS	backspace
CAN	cancel
CR	carriage return
DC1	device control 1
DC2	device control 2
DC3	device control 3
DC4	device control 4 (stop)
*DEL	delete
DLE	data link escape
EM	end of medium
ENQ	enquiry
EOT	end of transmission
ESC	escape
ETB	end of transmission block
ETX	end of text
FF	form feed
FS	file separator
GS	group separator
HT	horizontal tabulation
LF	line feed
NAK	negative acknowledge
NUL	null
RS	record separator
SI	shift in
SO	shift out
SOH	start of heading
STX	start of text
SUB	substitute
SYN	synchronous idle
US	unit separator
VT	vertical tabulation

*not strictly a control character

TABLE 3-4.3 BAUDOT CODE SYSTEM AND CHARACTER SET

NOTE

Essentially two character sets (U. S. and U. K.) are accommodated. Both character sets are printed as described in Paragraph 3-4.4.

Bits					Letters	Figures	
b5	b4	b3	b2	b1	U. S. & U. K.	U. S.	U. K.
0	0	0	0	1	E	3	3
0	0	0	1	0	LINE FEED	LINE FEED	LINE FEED
0	0	0	1	1	A	–	–
0	0	1	0	0	SPACE	SPACE	SPACE
0	0	1	0	1	S	!	!
0	0	1	1	0	I	8	8
0	0	1	1	1	U	7	7
0	1	0	0	0	CAR RET	CAR RET	CAR RET
0	1	0	0	1	D	*	*
0	1	0	1	0	R	4	4
0	1	0	1	1	J	BELL	BELL
0	1	1	0	0	N	,	,
0	1	1	0	1	F	$	%
0	1	1	1	0	C	:	:
0	1	1	1	1	K	(	(
1	0	0	0	0	T	5	5
1	0	0	0	1	Z	"	+
1	0	0	1	0	L	)	)
1	0	0	1	1	W	2	2
1	0	1	0	0	H	#	£
1	0	1	0	1	Y	6	6
1	0	1	1	0	P	0	0
1	0	1	1	1	Q	1	1
1	1	0	0	0	O	9	9
1	1	0	0	1	B	?	?
1	1	0	1	0	G	&	@
1	1	0	1	1	FIGS	FIGS	FIGS
1	1	1	0	0	M	.	.
1	1	1	0	1	X	/	/
1	1	1	1	0	V	;	-
1	1	1	1	1	LTRS	LTRS	LTRS

Nonprinting characters

3-4.5.2 Printhead Compensation Circuit. The Printhead Compensation Circuit and printhead driver transistors are located on the Printer Code PC card (see schematic 959178, in Appendix C). These circuits ensure that the proper voltage is applied to the printhead (PVOLT).

Current for the printhead drivers is provided by a constant current source consisting of Q6 and CR6. This source provides current for printhead driver transistors Q7 and Q9. The PVOLT output voltage is controlled by the voltage compensation circuit which adjusts the voltage by sinking a portion of the current available for PVOLT drive. This current consists of two operational amplifier circuits AR2 and AR3. AR3, an OP AMP which sinks current, has two negative inputs: one from the slow printing bias circuit and the other negative input from the gain feedback loop. The slow printing bias is set by choosing the slow resistor on the printhead. This sets PVOLT to the proper level for slow printing (1 char/sec) for this particular printhead. The gain feedback loop consists of resistor R35 and variable resistor R36. R36 acts as a contrast adjustment, capable of changing gain of this stage from 15 to 50. The positive input to AR3 becomes effective when the printer is operating at fast printing speeds.

The operational amplifier AR2 is used as a sensing amplifier for the printhead temperature compensation diode. This amplifier is set for a gain of 30. A resistor divider R14 and R15 hold the negative input to a constant reference voltage. The voltage of the printhead diode is applied to the positive input. This diode is provided with 1 mA current from the 9V reference voltage through R12 and the balance resistor R4 located on the printhead. The balance resistor is chosen at room temperature to ensure that all printheads have the same diode voltage at room temperature. When the printhead is not printing (PRINT is low), Q1 and Q2 turn on FET Q13. This allows capacitor C4 to charge up to the diode voltage (DVOLT). When the print command is given, Q2 will turn off Q13, and capacitor C4 will be isolated to retain the DVOLT level during the 10 msec printing time.

When printing, the temperature of the diode rises quickly and falls quickly. When printing slow, the diode has time to return to ambient temperature. In this condition the output of AR2 is zero, and the gain of AR3 is controlled exclusively by the slow resistor. When the printer is running fast, the temperature of the printhead rises, causing the diode voltage to drop. This change is amplified by AR2, enabling the fast resistor which controls the gain of AR3. Thus, as the ambient temperature of the head increases, the print voltage is decreased proportionately.

When the print command is low, transistors Q3 and Q4 clamp PVOLT to ground through CR7 and CR8. If the print command stays high too long (longer than 11-12msec) one-shot Z19 will time out, and the buffers on the Printhead Interface PC card will be cleared (PHBFRCLR), removing the base drive from the head. Overvoltage protection for the printhead is provided by CR9, CR10, CR11, and Q8. If PVOLT rises high enough for CR9 and CR10 to conduct, Q8 will generate PHBFRCLR which removes the base drive to the head. At the end of each print pulse, Z22 generates PHBFRCLR to remove base drive from the head. A timing diagram is shown in Figure 3-4.10.

Current regulation to the head is provided by R30 and Q5. This limits the short-circuit current of PVOLT to less than 3.5 amps.

Reference voltages for the compensation circuits are provided by voltage regulator AR1. Resistor R9 is selected to produce the correct reference voltage (approximately 9.0 volts). The bell driver also is located on the Printer Code PC card. When the head reaches column 72 or the BEL character is received, a one-shot is fired. This gates the bell clock (3.2kHz) to transistor A10 and applies a 3200-Hz tone to the speaker.

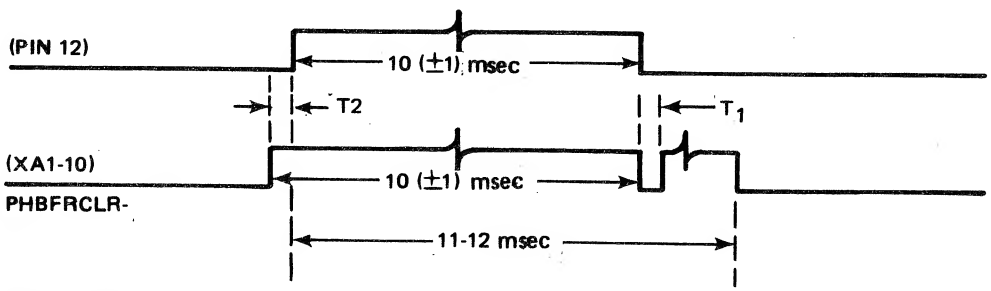

T_2 = 2.5 (±0.5) µSEC

T_1 = 1-2µSEC

FIGURE 3-4.10. PRINTHEAD BUFFER CLEAR (PHBFRCLR) TIMING DIAGRAM

3-5 KEYBOARDS AND KEYBOARD INTERFACE.

The keyboard used in the data terminals is a fully encoded, alphanumeric keyboard with two-key rollover. The interface for the keyboards is located on the Printer Code PC card (see schematic 959178 for both ASCII and Baudot). A block diagram of the keyboard interface is shown in Figure 3-5.1. A flow chart and a timing diagram are shown in Figures 3-5.2 and 3-5.3.

Upon detection of a keyboard strobe, the parallel keyboard data is loaded into the data buffer, and the strobe flipflop is clocked. The keyboard interface then sends a keyboard request (KBDREQ) to terminal control and waits for a keyboard enable (KBDENA). Keyboard interface uses this enable and eight system clocks (SCLK) to transmit the character serially to the data bus. When this is done, the repeat key (REPEAT) is checked, and a flipflop is set to remember the state of the repeat key. The interface then checks for another strobe; if there is no strobe but the REPEAT key is depressed, another request will be generated and the same character will be retransmitted. This will continue until there is a strobe or until the REPEAT key is released. If the REPEAT key is on and a new keyboard strobe is received, the new character will be loaded into the data buffer, and it will then be transmitted as before. When there is no REPEAT key signal, only one character will be transmitted for each keyboard strobe (depression of a key).

A state counter determines the sequence of operations as shown in Figures 3-5.2 and 3-5.3.

Any time the ASR control panel keyboard LINE/OFF/LOCAL switch is in the OFF position, the keyboard interface will be held in the reset position and will not accept strobes. Since the keyboard outputs only 7 bits and the terminal requires 8 bits on the serial bus, the eighth (parity bit) is hardwired on the motherboard to be the same as bit 1. Therefore, on all data from the keyboard, the eighth bit will be the same as bit 1 when clocked on the internal serial data bus. However, the record control or transmitter may change this arrangement.

3-5.1 STANDARD ASCII. The output of the standard ASCII keyboard is serial by character and parallel by bit. There are seven data bits and a strobe pulse; no parity is generated by the keyboard. The strobe pulse is shown in Figure 3-5.4 relative to a typical data bit. The ASCII codes generated are shown in Table 3-4.2.

All signal outputs are TTL-compatible (data and strobe). The outputs of the special function keys, except $\underleftarrow{\text{TAPE}}$ and $\underrightarrow{\text{TAPE}}$, are isolated single-contact closures to ground. The $\underrightarrow{\text{TAPE}}$ and $\underleftarrow{\text{TAPE}}$ keys are debounced, and the output from these keys is a TTL-compatible pulse. These outputs are normally at a logic ONE. The special function keys are:

a. HERE IS

b. PAPER ADV (Advance)

c. BREAK

d. REPEAT

e. $\underleftarrow{\text{TAPE}}$

f. $\underrightarrow{\text{TAPE}}$.

Pin assignments for the standard keyboard connector (inside connector) are listed in Table 3-5.1.

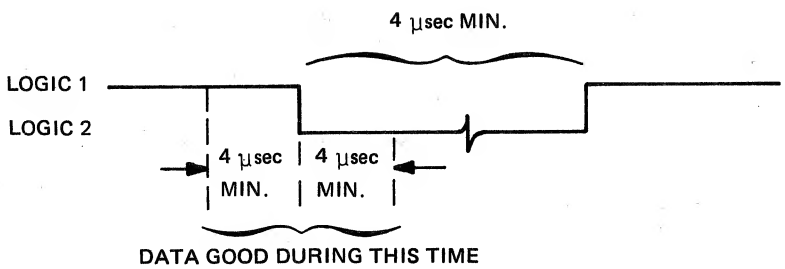

FIGURE 3-5.4. KEYBOARD STROBE PULSE

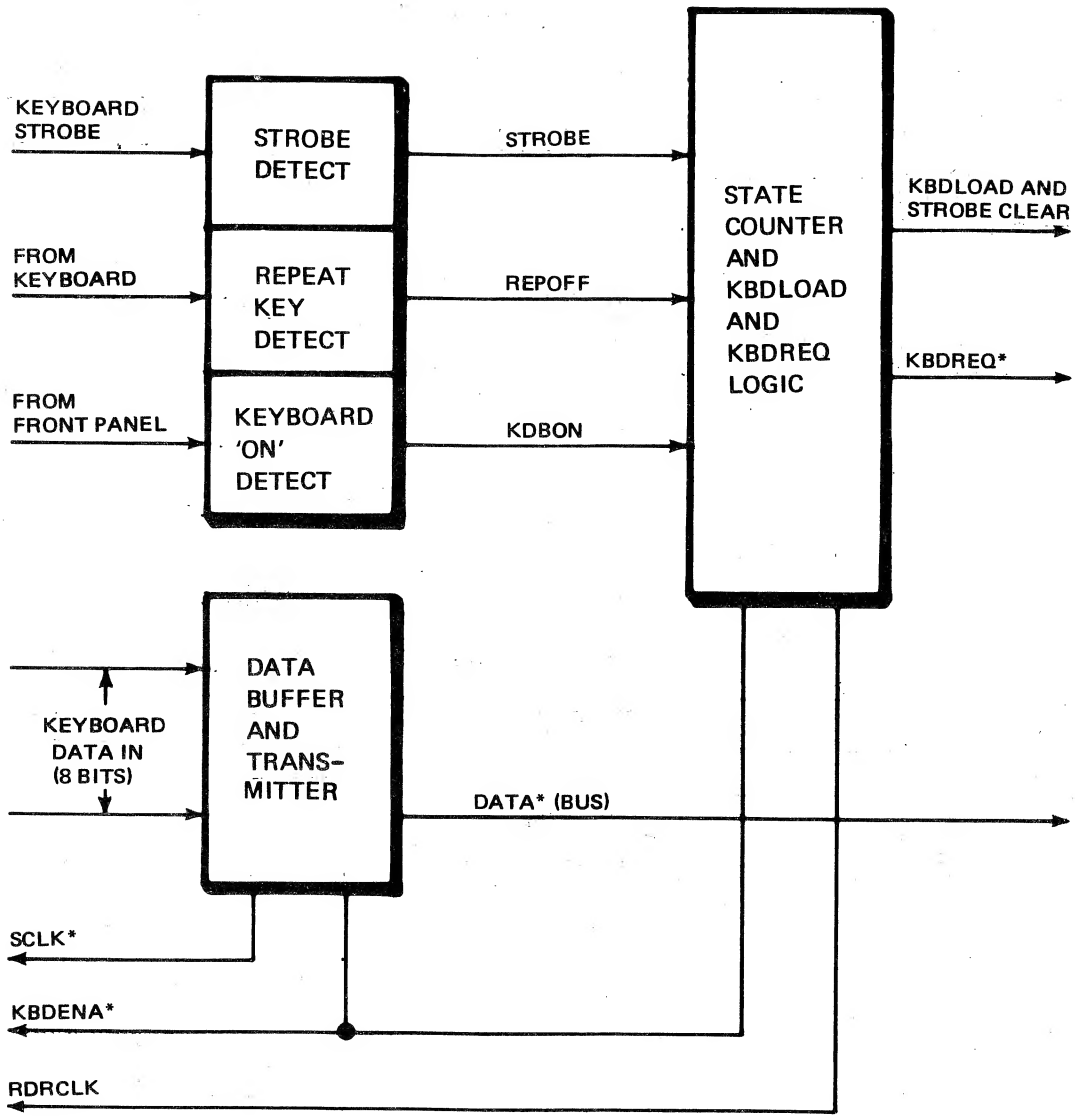

FIGURE 3-5.1. KEYBOARD INTERFACE BLOCK DIAGRAM

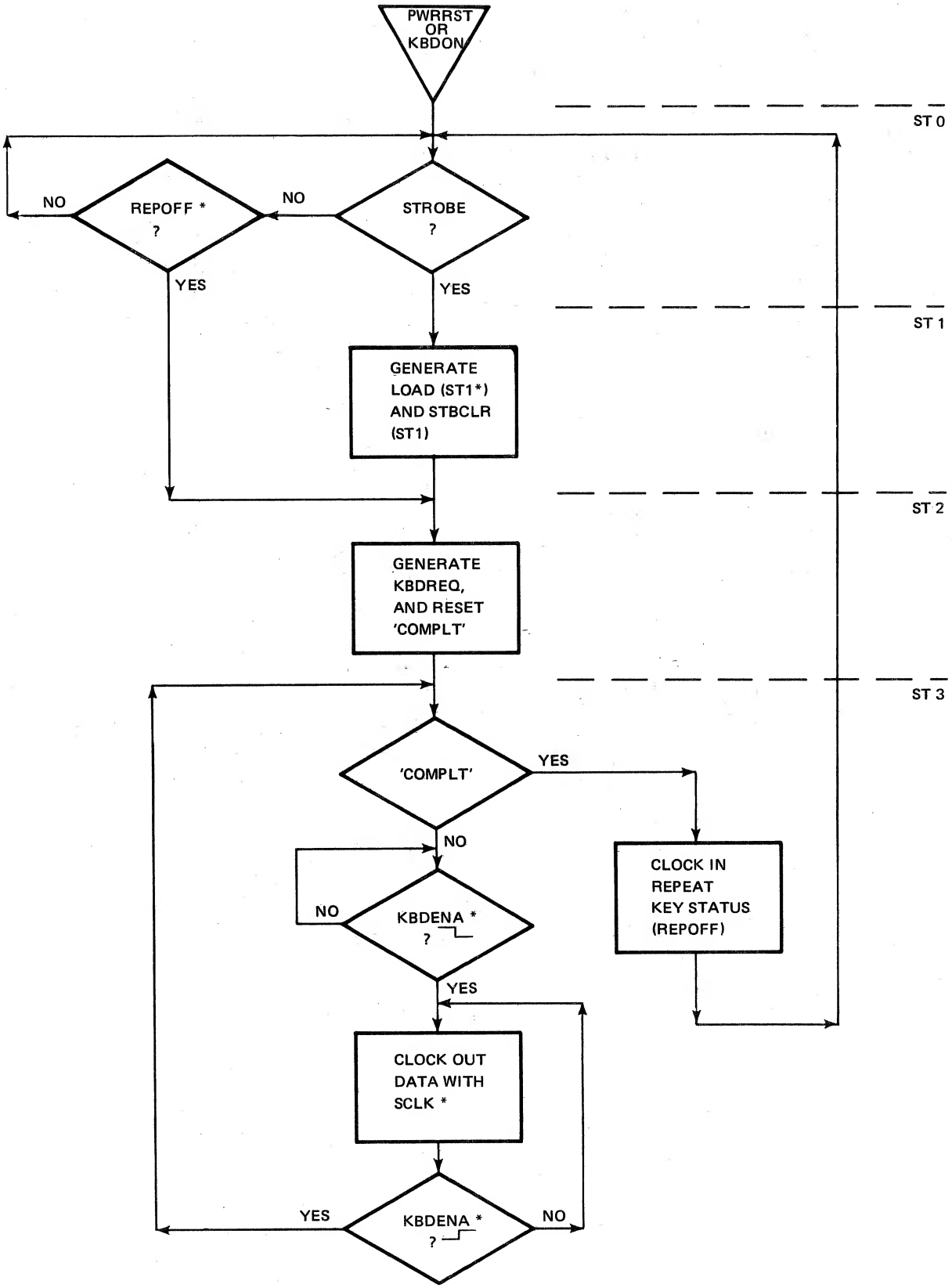

FIGURE 3-5.2. KEYBOARD INTERFACE STATE FLOW DIAGRAM

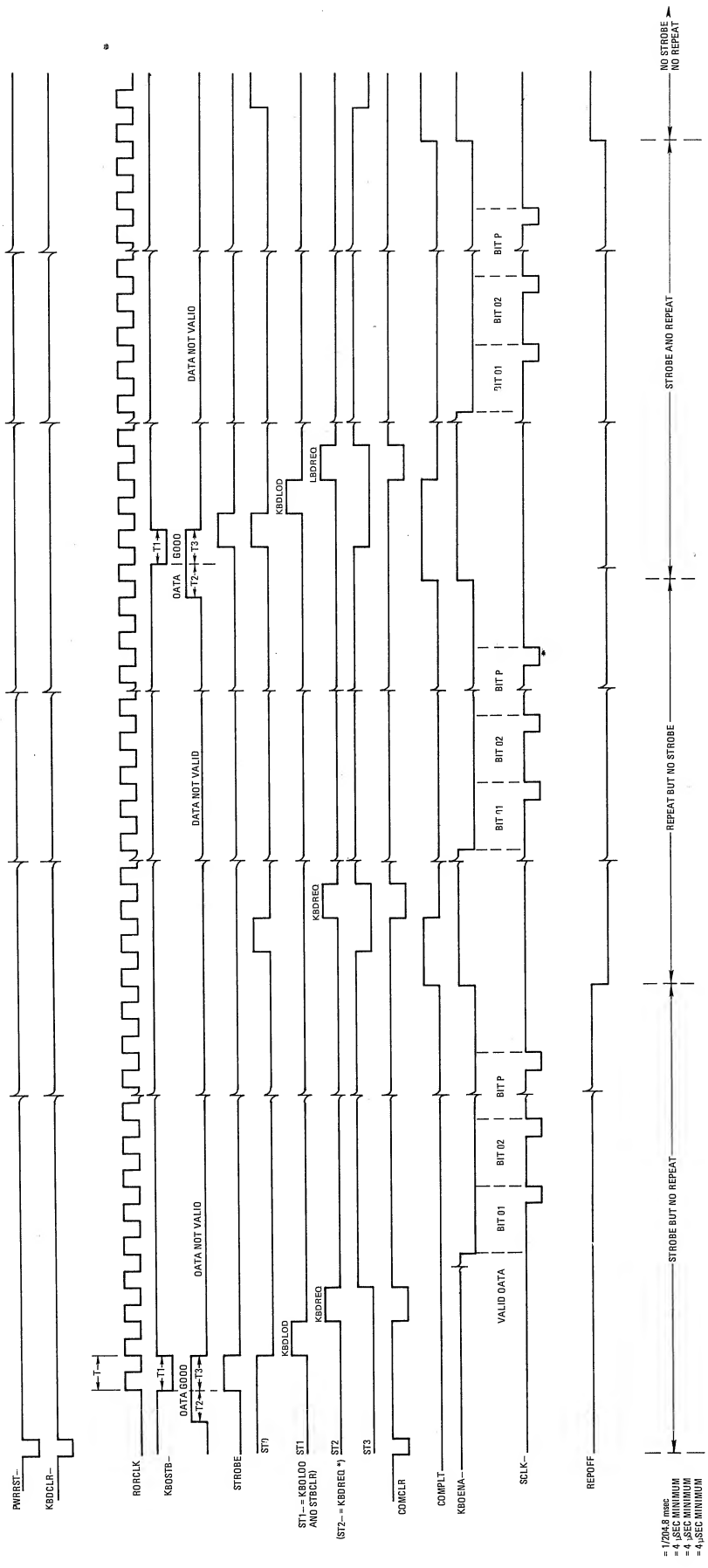

FIGURE 3-5.3. TIMING DIAGRAM KEYBOARD INTERFACE

TABLE 3-5.1. STANDARD KEYBOARD CONNECTOR PIN ASSIGNMENTS

Pin Number	Signal	Pin Number	Signal
1	BIT 6 (Data)	A	BIT 7 (Data)
2	SPEED (Direct Connection to Switch Connector)	B	BIT 5 (Data)
3	BIT 1 (Data)	C	BIT 2 (Data)
4	BIT 3 (Data)	D	
5	REPEAT (Special Function Output)	E	BREAK (Special Function Output)
6	TAPE (Special Function Output)	F	ON LINE (Direct Connection to Switch Connector)
7	TAPE (Special Function Output)	H	STROBE PULSE
8	GROUND	J	HERE IS (Special Function Output)
9	+5V Power	K	PAPER ADVance (Special Function Output)
10	-12V Power	L	CLOCK (For Debounce Circuit)

Standard ASCII keyboard layout and symbolization are shown in Figure 3-5.5. The character set is shown in Figures 3-5.6 through 3-5.9.

3-5.2 UPPERCASE/LOWERCASE ASCII KEYBOARD. The Uppercase/Lowercase (full) ASCII keyboard is the same as the standard ASCII keyboard (see Section 3-5.1) except the uppercase/lowercase keyboard generates either uppercase or lowercase codes, depending on the position of the UPPERCASE key. Full ASCII keyboard layout and symbolization are shown in Figure 3-5.10. ASCII codes generated are listed in Table 3-4.2. The full ASCII keyboard character set is shown in Figures 3-5.11 through 3-5.13.

3-5.3 BAUDOT KEYBOARD. The Baudot keyboard is the same as the standard ASCII keyboard except the Baudot keyboard generates a 5-bit Baudot code instead of the ASCII code. The additional tab area used for numeric entry on the standard ASCII-type keyboard is used only as a connection for the ON-LINE switch (connects to pin H) on the Baudot-type keyboard (pins 7 and 8 are still grounded).

The Baudot keyboard layout and symbolization are shown in Figure 3-5.14. The Baudot codes generated for the keys shown in Figure 3-5.15 are listed in Table 3-4.3.

3-5.4 CALCULATOR NUMERIC CLUSTER ASCII KEYBOARD. The calculator numeric cluster keyboard is the same as the standard ASCII keyboard (see Section 3-5.1) except the calculator numeric cluster keyboard generates numeric codes when the NUM LOCK key is depressed and the HERE IS key function is not available. Calculator cluster ASCII keyboard layout and symbolization is shown in Figure 3-5.16. ASCII codes generated are listed in Table 3-4.2. The calculator cluster ASCII keyboard character set is shown in Figures 3-5.17 through 3-5.20.

3-6 TRANSMIT/RECEIVE PC CARD (EIA INTERFACE).

3-6.1 ASCII TRANSMIT/RECEIVE PC CARDS (300 BAUD MAXIMUM). Three versions of the ASCII Transmit/Receive PC card are available: the standard version (TI Part No. 959135*) and the optional dual-format version (TI Part No. 969455* or 973905). The dual-format version is equipped with strappable options which permit the Dual-Format Transmit/Receive PC card either to operate like the standard version (standard format) or to operate in binary format. The standard format operation of the PC cards is identical. Differences in binary-format operation are noted in the following description.

*This PC card is obsolete.

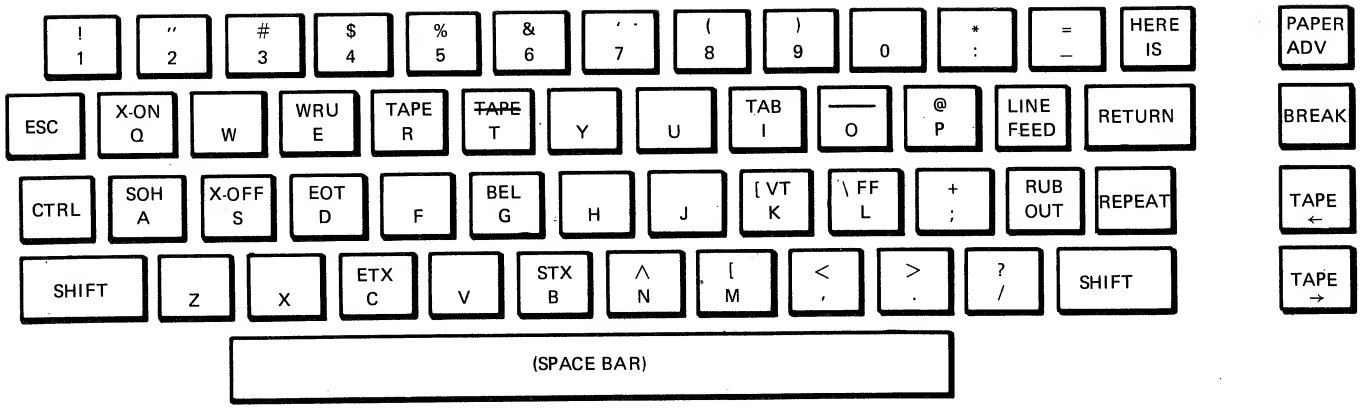

FIGURE 3-5.5. STANDARD ASCII KEYBOARD LAYOUT AND SYMBOLIZATION

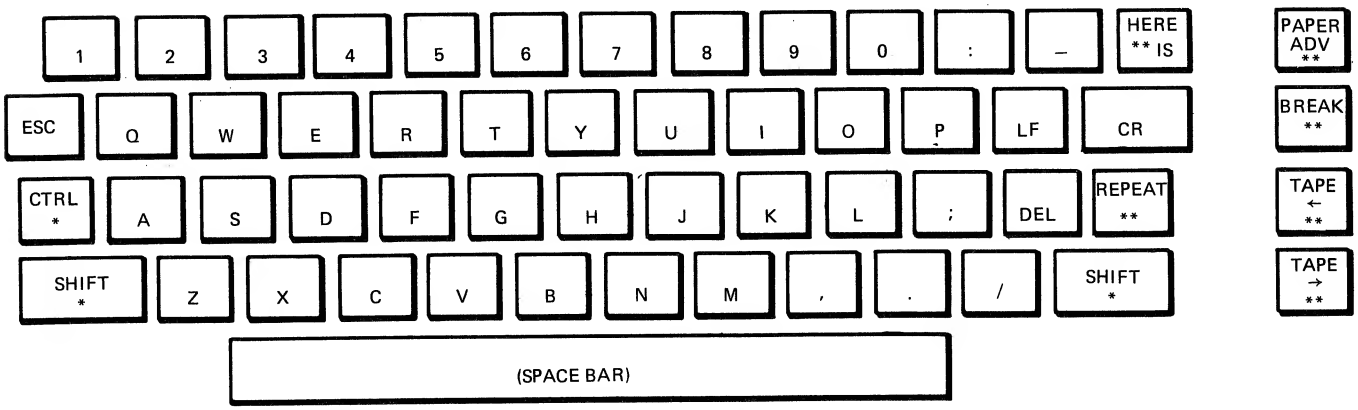

NOTES: * The above codes are generated when the labled key is depressed, but neither the SHIFT nor the CONTROL (CTRL) key is depressed.

** Not a code-generating key.

FIGURE 3-5.6. UNSHIFTED CHARACTERS, STANDARD ASCII KEYBOARD

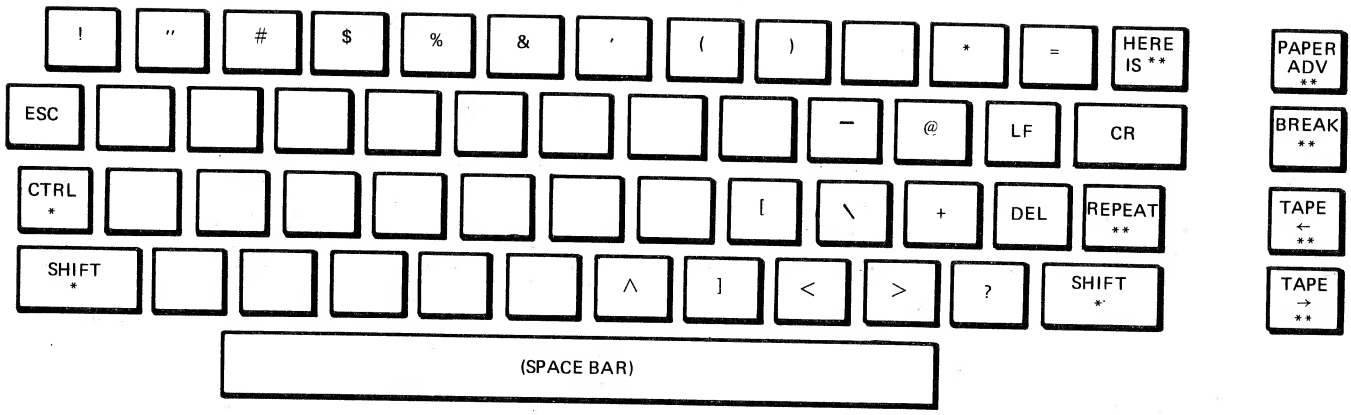

NOTES:

* The above codes are generated when the labled key and the SHIFT key are depressed, but the CONTROL(CTRL) key is not depressed.

** Not a code-generating key.

A blank key indicates strobe inhibit

FIGURE 3-5.7. SHIFTED CHARACTERS, STANDARD ASCII KEYBOARD

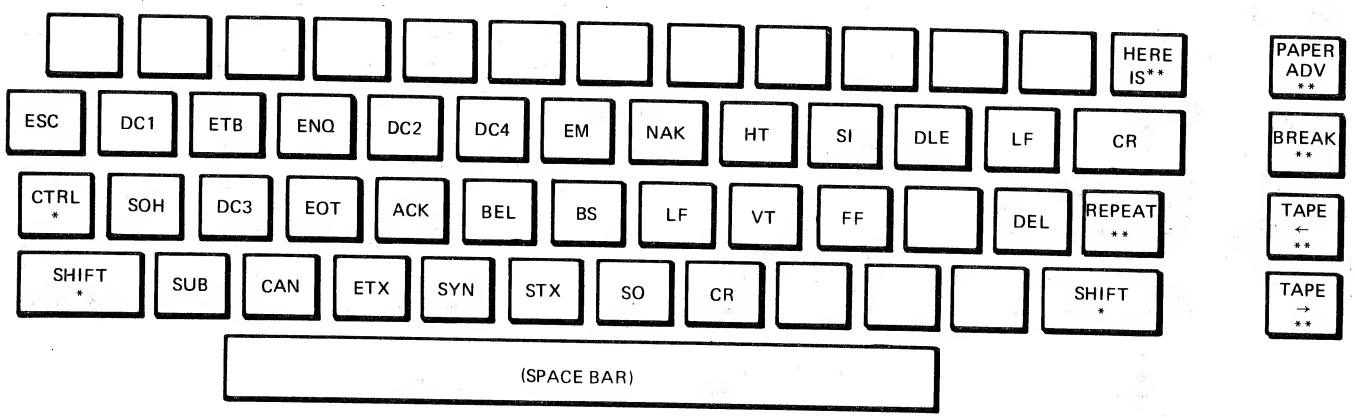

NOTES:

* The above codes are generated when the labled key and the CONTROL (CTRL) key are depressed, but the SHIFT key is not depressed.

** Not a code-generating key

A blank key indicates strobe inhibit.

FIGURE 3-5.8. CONTROL CHARACTERS, STANDARD ASCII KEYBOARD

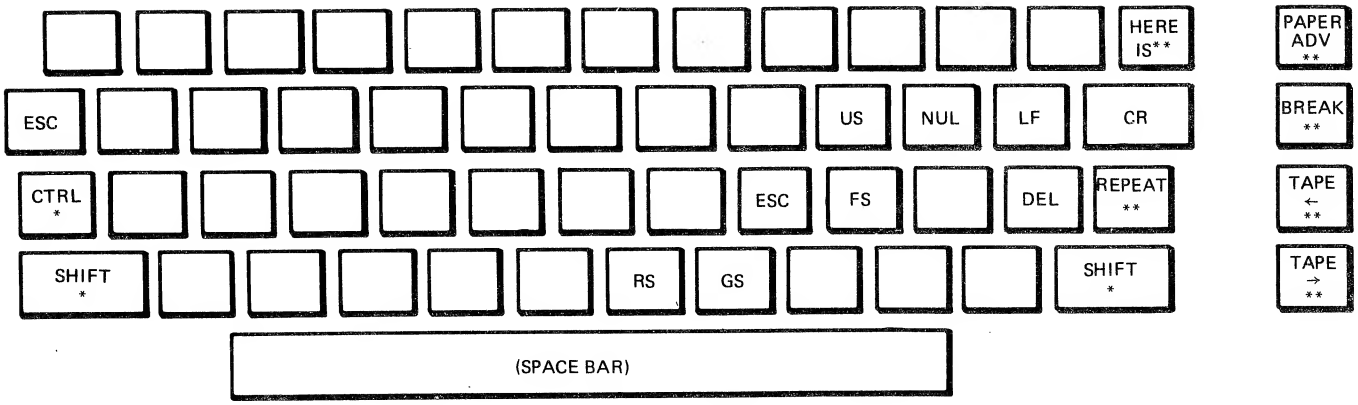

NOTES: * The above codes are generated when the labled key, the SHIFT key, and the control (CTRL) key are depressed.

** Not a code-generating key.

A blank key indicates strobe inhibited.

FIGURE 3-5.9. SHIFT AND CONTROL CHARACTERS, STANDARD ASCII KEYBOARD

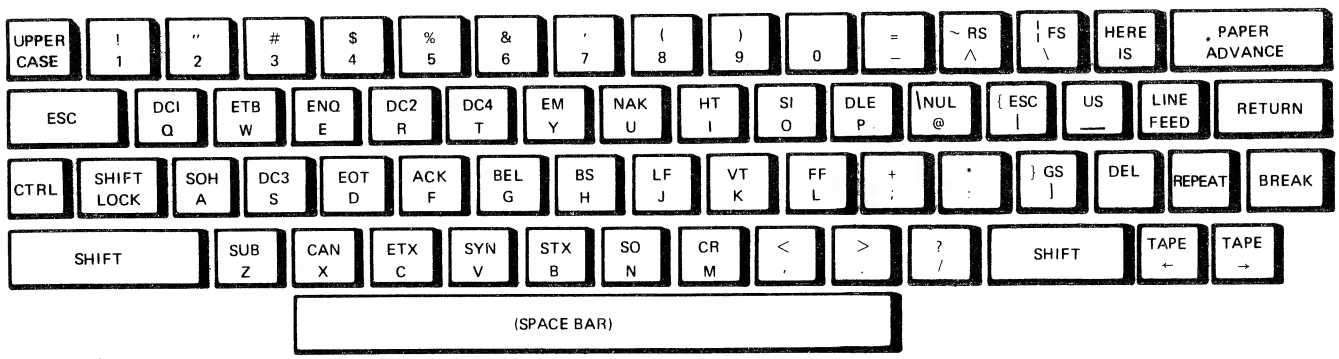

LEGEND:

= Control Character
= Alphabetic character (SHIFT for uppercase)

= Shifted character
= Unshifted character

= Shifted character, control character
= Graphic unshifted

FIGURE 3-5.10. FULL ASCII KEYBOARD SYMBOLIZATION

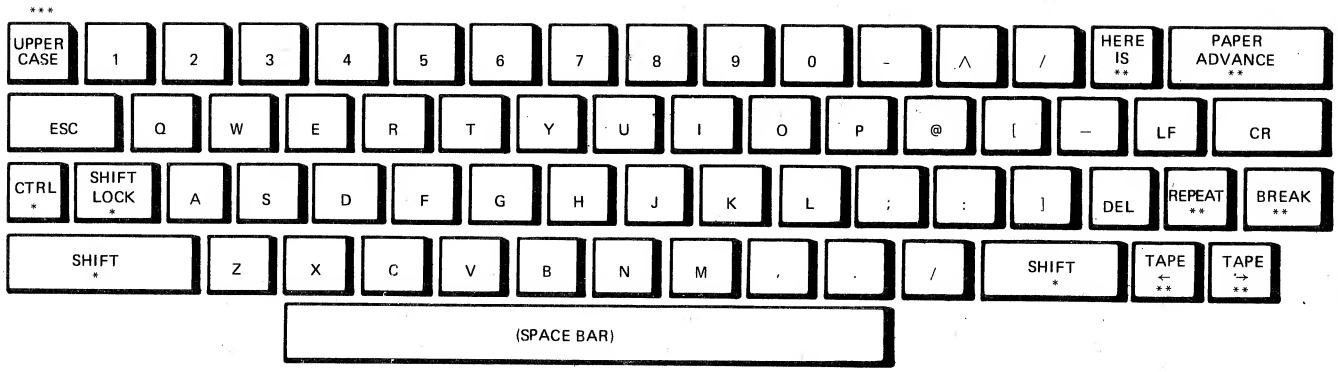

NOTES:

*The above codes are generated when the labeled key is depressed but neither the SHIFT nor the CTRL key is depressed.

**Not a code generating key.

***If UPPER CASE is depressed, only upper case alphabet codes are generated, otherwise lower case alphabetic codes are generated.

FIGURE 3-5.11. LOWERCASE CHARACTERS, FULL ASCII KEYBOARD

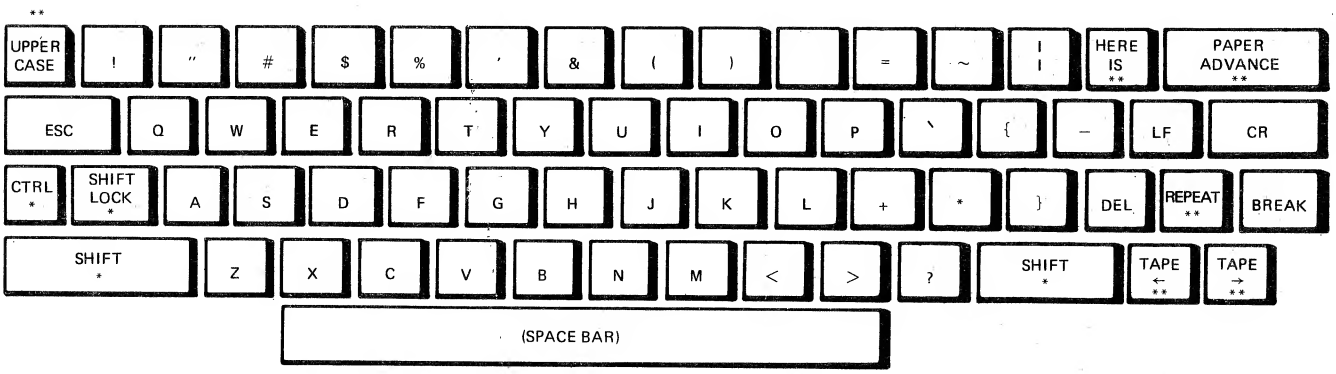

NOTES:

*The above codes are generated when the labeled key and the SHIFT key are depressed. UPPER CASE has no effect.

**Not a code generating key.

A blank key indicates strobe inhibit. Depressing SHIFT and CTRL keys together inhibits strobe.

FIGURE 3-5.12. SHIFTED CHARACTERS, FULL ASCII KEYBOARD

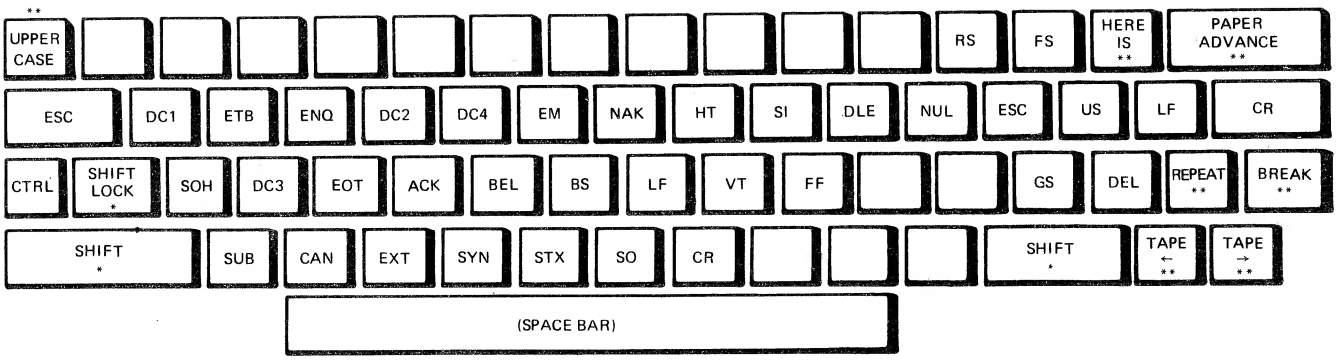

NOTES:

* The above codes are generated when the labeled key and the CTRL key are depressed. UPPERCASE and SHIFT keys have no effect.

** Not a code generating key.

A blank indicates strobe inhibit. Depressing SHIFT and CTRL keys together inhibits strobe.

FIGURE 3-5.13. CONTROL CHARACTERS, FULL ASCII KEYBOARD

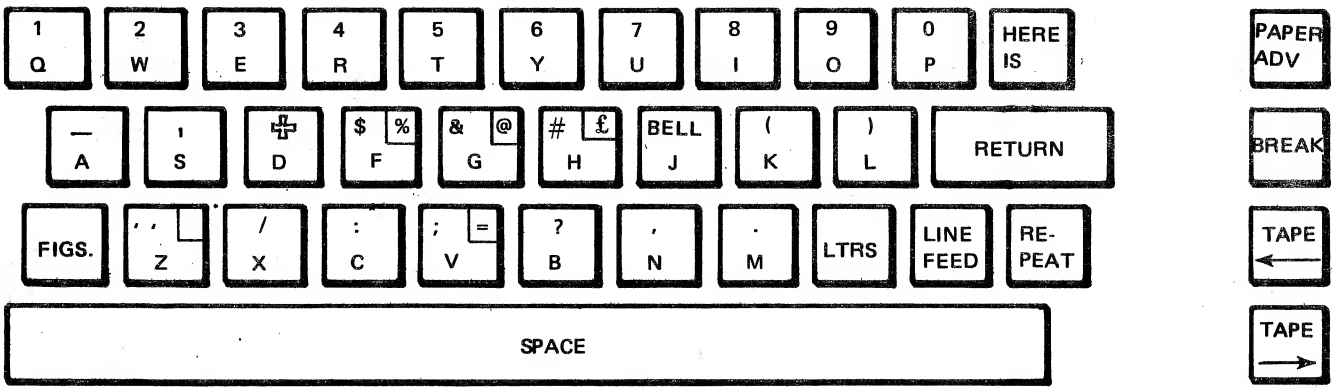

When each key is depressed, the data terminal generates the indicated Baudot characters according to Table 3-3. U. S. figures are shown on upper lefthand surface of the keys, and U. K. figures are shown on upper righthand surface of the keys (where different). Printing of either figure set is a strappable option.

FIGURE 3-5.14. BAUDOT KEYBOARD

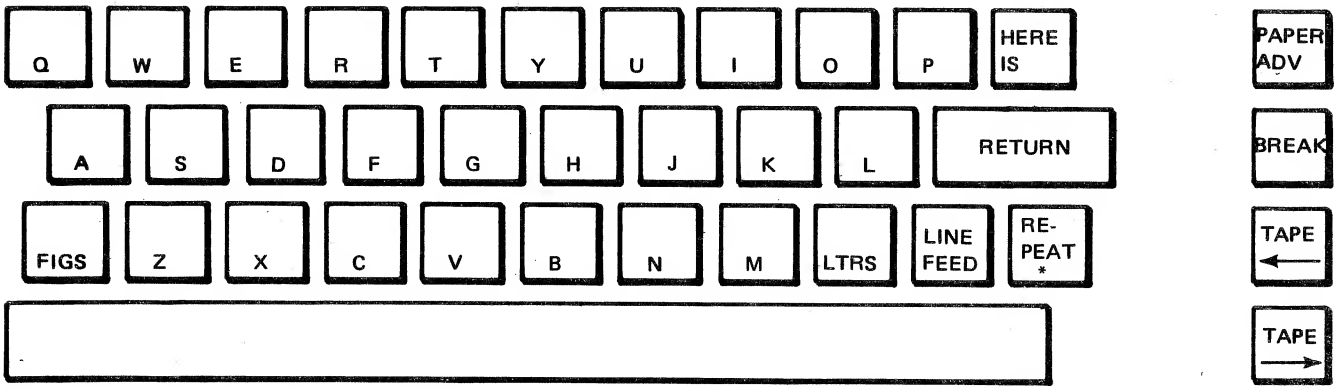

The Baudot codes corresponding to the above characters are generated when the LTRS and the labeled key is depressed.

* NOT A CODE-GENERATING KEY

FIGURE 3-5.15. BAUDOT LETTER MODE KEYBOARD CODES

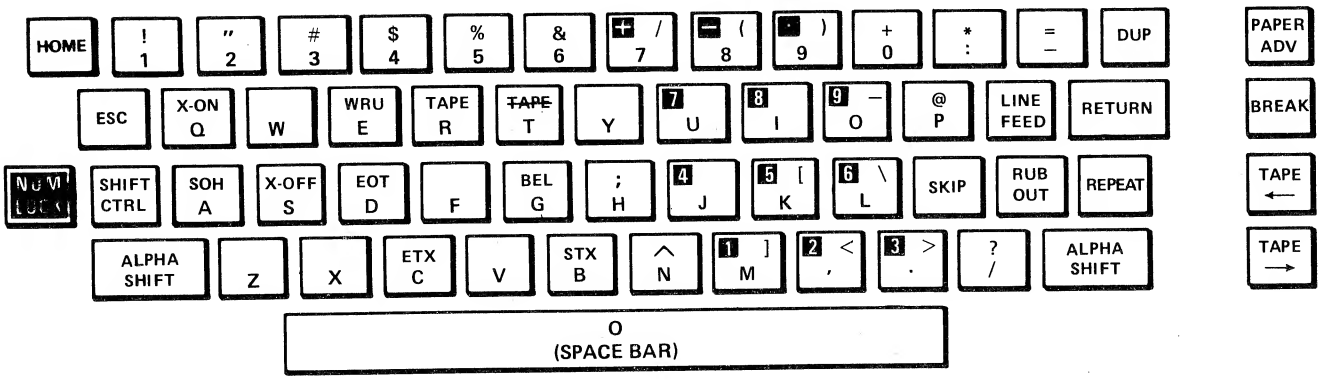

FIGURE 3-5.16. OPTIONAL LIMITED ASCII WITH CALCULATOR CLUSTER KEYBOARD LAYOUT AND SYMBOLIZATION

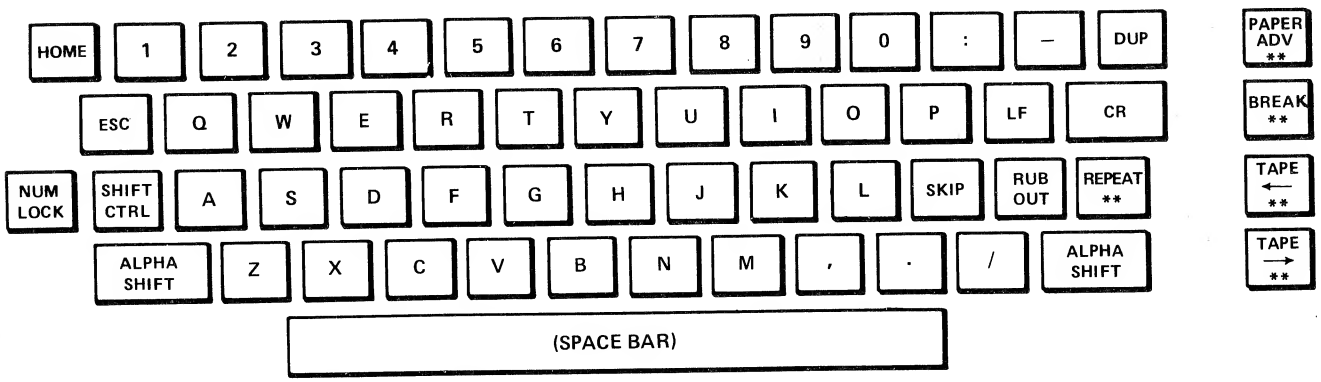

NOTES: THE ABOVE CODES ARE GENERATED WHEN THE LABELED KEY IS DEPRESSED AND NEITHER NUM LOCK, SHIFT/CONTROL,OR ALPHA SHIFT IS DEPRESSED OR WHEN BOTH NUM LOCK AND ALPHA/SHIFT BUT NOT SHIFT/CONTROL IS DEPRESSED

** INDICATES THAT IT IS NOT A CODE GENERATING KEY

FIGURE 3-5.17. UNSHIFTED CHARACTERS, CALCULATOR CLUSTER KEYBOARD

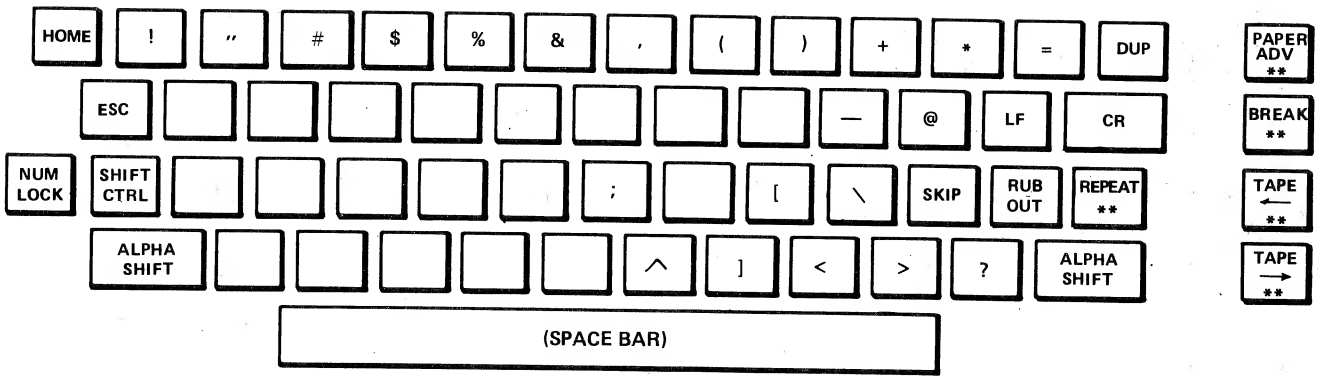

NOTES: THE ABOVE CODES ARE GENERATED WHEN THE LABELED KEY AND THE ALPHA/SHIFT KEY ARE DEPRESSED WITH THE NUM LOCK AND SHIFT/CTRL NOT DEPRESSED, OR WHEN SHIFT/CTRL AND NUM LOCK ARE DEPRESSED AND THE ALPHA/SHIFT IS NOT DEPRESSED.

** INDICATES THAT IT IS NOT A CODE GENERATING KEY

A BLANK KEY INDICATES A CODE IS NOT GENERATED

FIGURE 3-5.18. SHIFTED CHARACTERS, CALCULATOR CLUSTER KEYBOARD

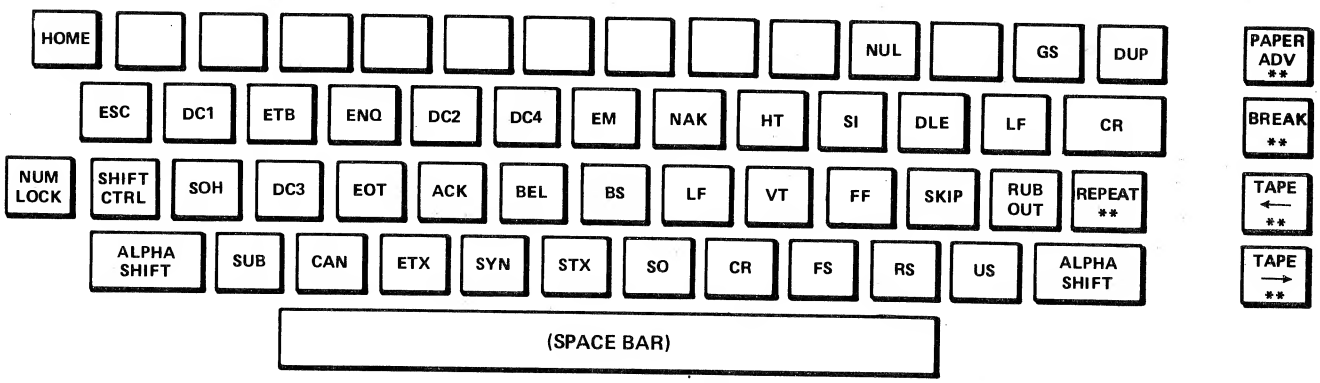

NOTES: THE ABOVE CODES ARE GENERATED WHEN THE LABELED KEY AND THE SHIFT/CTRL KEY ARE DEPRESSED WITH NUM LOCK AND ALPHA/SHIFT NOT DEPRESSED, OR WHEN BOTH SHIFT/CTRL AND ALPHA/SHIFT ARE DEPRESSED AND NUM LOCK IS A DON'T CARE

** INDICATES THAT IT IS NOT A CODE GENERATING KEY

A BLANK KEY INDICATES A CODE IS NOT GENERATED

FIGURE 3-5.19. CONTROL CHARACTERS, CALCULATOR CLUSTER KEYBOARD

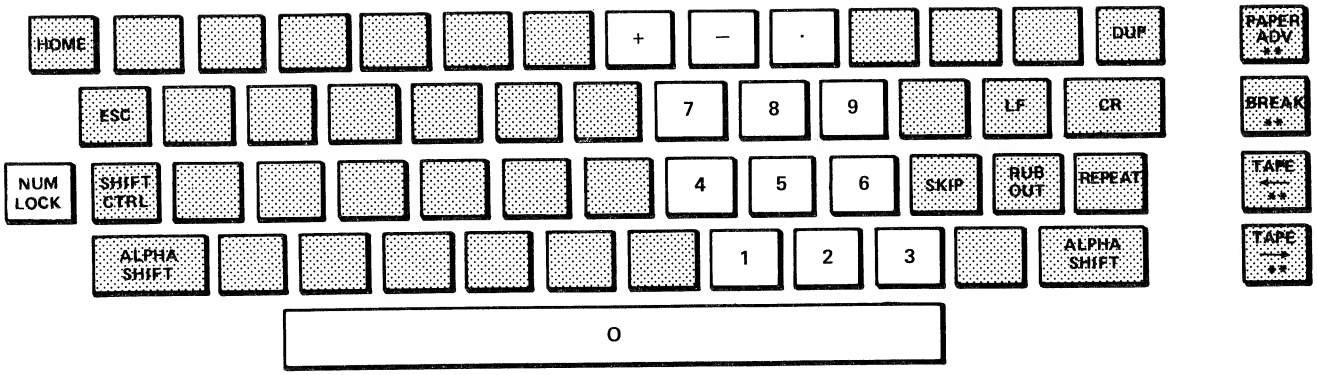

NOTES: THE ABOVE CODES ARE GENERATED WHEN THE LABELED KEY AND THE NUM LOCK IS DEPRESSED WITH SHIFT/CTRL AND ALPHA/SHIFT NOT DEPRESSED.

** INDICATES NOT A CODE GENERATING KEY.

A BLANK KEY INDICATES A NUL CHARACTER IS GENERATED.

FIGURE 3-5.20. CALCULATOR NUMERIC CHARACTERS, CALCULATOR CLUSTER KEYBOARD

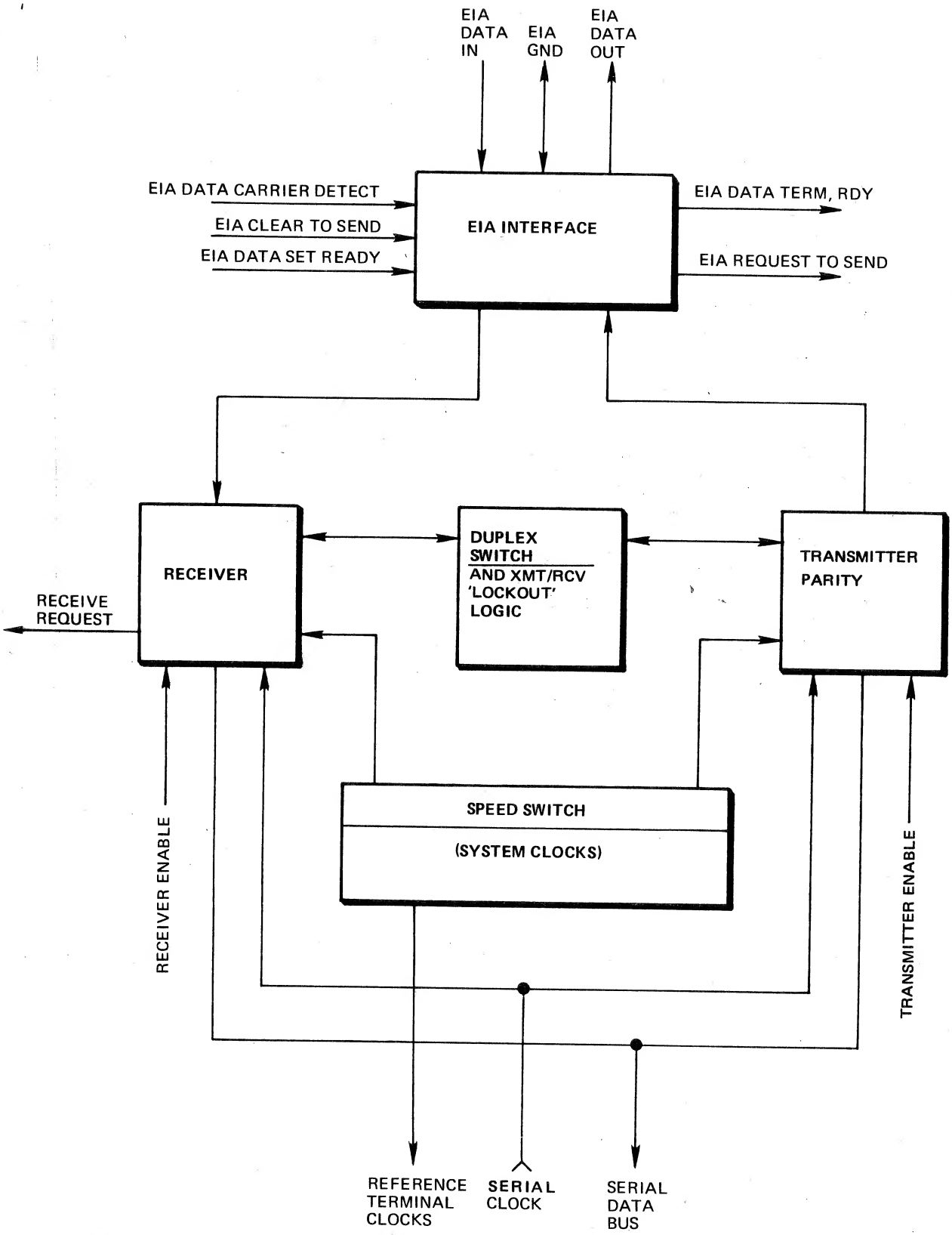

FIGURE 3-6.1. ASCII/BAUDOT TRANSMIT/RECEIVE PC CARD BLOCK DIAGRAM

binary format. The standard format operation of both PC cards is identical. Differences in binary-format operation are noted in the following description.

Both versions of the ASCII Transmit/Receive PC cards, block diagrammed in Figure 3-6.1, are composed of four major sections:

a. Transmitter

b. Receiver

c. System clocks

d. EIA control signals.

3-6.1.1 Transmitter. Upon receipt of a transmit-enable (XMTENA) and eight system clocks (SCLK) from terminal control, the transmitter stores the character present on the serial data bus in a buffer register. As the data enters the buffer register, parity is generated. The parity is switch-selectable to even, odd, or continuous marking. At the end of the transmit-enable, the transmitter transfers the data (7 bits per character with parity in the 8th bit) in the buffer register to the output buffer.

NOTE

When the Dual-Format Transmit/Receive PC card (TI Part No. 973905 or 969455*) is strapped to binary format (resistor R17 installed between J1 and J2), parity is not generated and 8 data bits (no parity) are transferred from the buffer register to the output buffer. Table 3-6.1 summarizes the resistor-strappable functions of the Dual-Format PC card.

The SPEED switch on the card is adjustable to 10, 15, or 30 characters per second (CPS) and determines the speed at which the transmit clocks (XMTCLK) clock the data from the output buffer. Upon being clocked from the output buffer, a start bit and a stop bit (2 stop bits at 10 CPS) are added to the data. The data also is sent through a level converter which converts the TTL data to EIA data for the transmission line. At the start of a transmit enable, a transmitter busy (XMTBSY) flipflop is set which signals terminal control that the line is busy (LINBUSY) and no other characters can be transmitted during that time. The transmitter continues to clock the output buffer until the total number of bits, including start and stop bits (11 bits at 10 CPS, 10 bits at 15 or 30 CPS), are clocked to the output line. A transmit clock counter counts the transmit clocks and resets the transmitter after the data has been clocked to the line. The output data format is shown in Figure 3-6.2. As long as the transmitter is transmitting continuously (no more than a 0.5-bit time delay between transmit enables), and the DUPLEX switch is set to HALF DUPLEX, the receiver input flipflop is held preset, and the receiver is "locked out" from receiving any data from the line. Also, if the terminal is on-line (the ON-LINE switch on the Power Switch Panel is ON-LINE) and the BREAK key is depressed, the output line is held to a continuous low level (continuous SPACE) as long as the BREAK key remains depressed. A transmitter timing diagram is shown in Figure 3-6.3, and the transmitter/receiver schematics are contained in Appendix C of this manual.

3-6.1.2 Receive. The receiver section of the Transmit/Receive PC card is an asynchronous device which continuously monitors the transmission line. EIA data on the line is passed through an EIA-to-TTL level converter for use by the receiver. Upon receipt of a start bit (high to low transition from the line), the receiver starts timing for 0.5-bit time. If the line remains low for at least 0.5 bit time, a latch is set which keeps the receiver from resetting until the whole character has been received. If the line does not stay low for at least 0.5-bit time, the receiver resets immediately and continues looking for a true start bit.

When the start bit is recognized, it is clocked into an input buffer, and each succeeding data bit also is clocked into the buffer until the whole character is clocked in. Then the receiver is reset to search for the next start bit. The data is parallel-loaded into a serial data bus buffer for transmission to the serial data bus, and a serial receiver request (SRVREQ) signals terminal control that a character has been received from the line. If the terminal is in half-duplex when the start bit is recognized, a flipflop is set (RCVHDPX) which causes the line busy (LINBUSY) line to go high and inhibit the transmitter from sending any characters.

The transmitter will stay inhibited as long as the receiver continues to receive characters in half duplex, with no longer than a character time between each character received. When terminal control sends a serial receiver enable (SRVENA) and eight system clocks (SCLK) to the receiver, the data in the serial data bus buffer is clocked out to the serial bus. The clock (32CLK) which strobes the input data is derived from the serial receiver clock (SRVCLK), whose frequency is 64 times a bit time (as determined by the SPEED switch). The 32 clock (32 CLK) starts when the clear is removed from the receiver (a start bit is recognized), and the first 32CLK comes at 0.5 bit time and then every bit time thereafter.

If T is the bit time, the 7497 from which the SRVCLK is counted down to the 32CLK will cause the data to be strobed into the input buffer within ±T/128 of the center of each bit time. A block diagram of the receiver is shown in Figure 3-6.1; a timing diagram is shown in Figure 3-6.4; and the Transmitter/Receiver schematics are shown in Appendix C of this manual.

* This PC card is obsolete.

3-6.1.3 System Clocks. The entire clock system is derived from a single crystal (0.005 percent accurate) located on the Transmit/Receive PC card. The 13.5168-mHz crystal frequency is then counted down to provide all system clocks used in the data terminal. A block diagram of the system clock structure is shown in Figure 3-6.5.

3-6.1.4 EIA Control Signals. The transmitter and receiver are governed by a set of EIA control signals. These signals are supplied at the EIA connector by both the EIA sender to the terminal, and the terminal itself. The five EIA control signals and their functions are:

TABLE 3-6.1. DUAL-FORMAT ASCII TRANSMIT/RECEIVE TRANSMITTER DATA FORMAT

Data Format	Install R17 Between	Function
Standard	J3 and J4	Transfers 7 bits of character (parity in the 8th bit) to the output buffer
Binary	J1 and J2	Transfer all 8 bits of character to the output buffer

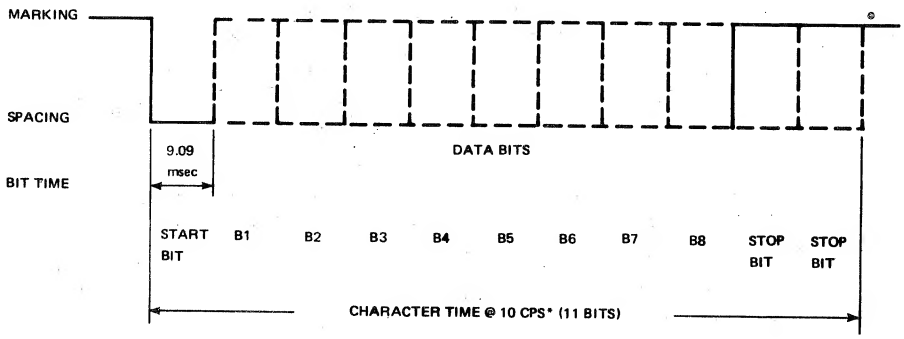

10 CPS* TIMING

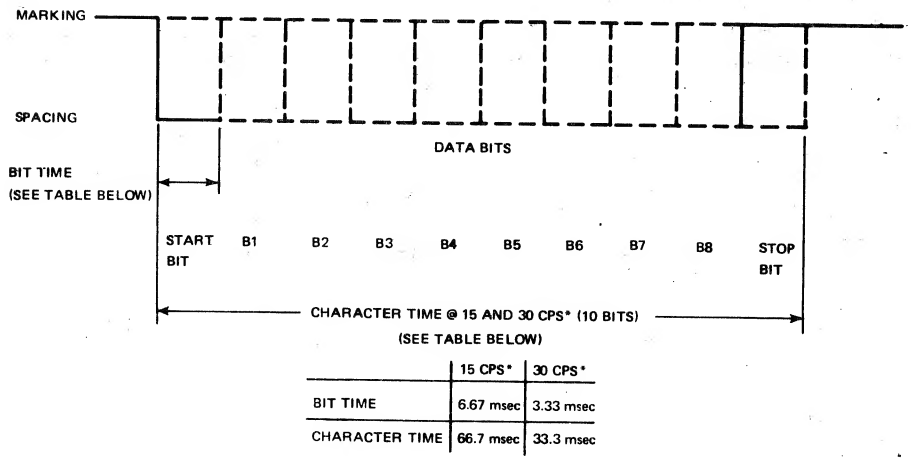

	15 CPS*	30 CPS*
BIT TIME	6.67 msec	3.33 msec
CHARACTER TIME	66.7 msec	33.3 msec

* CPS = CHARACTERS PER SECOND

FIGURE 3-6.2. ASCII LINE DATA FORMAT

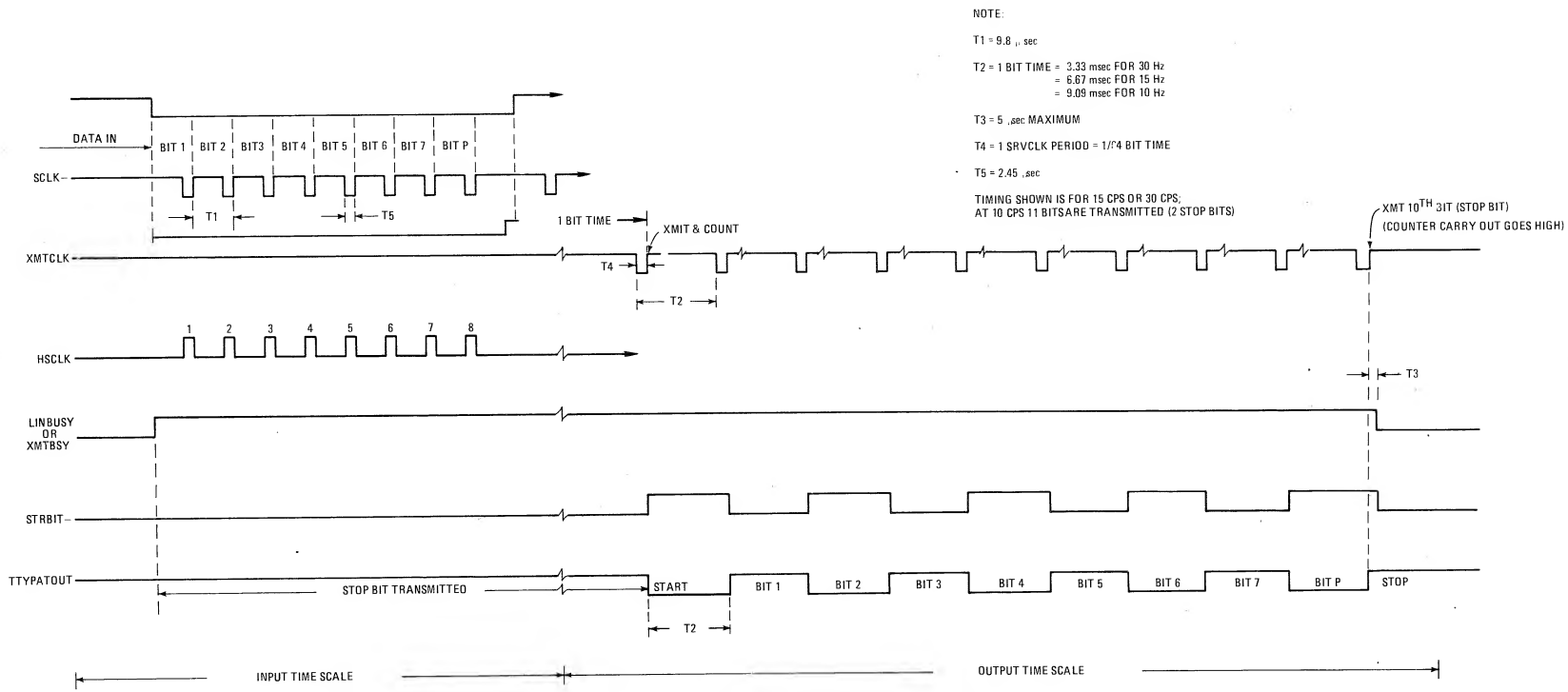

FIGURE 3-6.3. ASCII SERIAL TRANSMITTER TIMING DIAGRAM

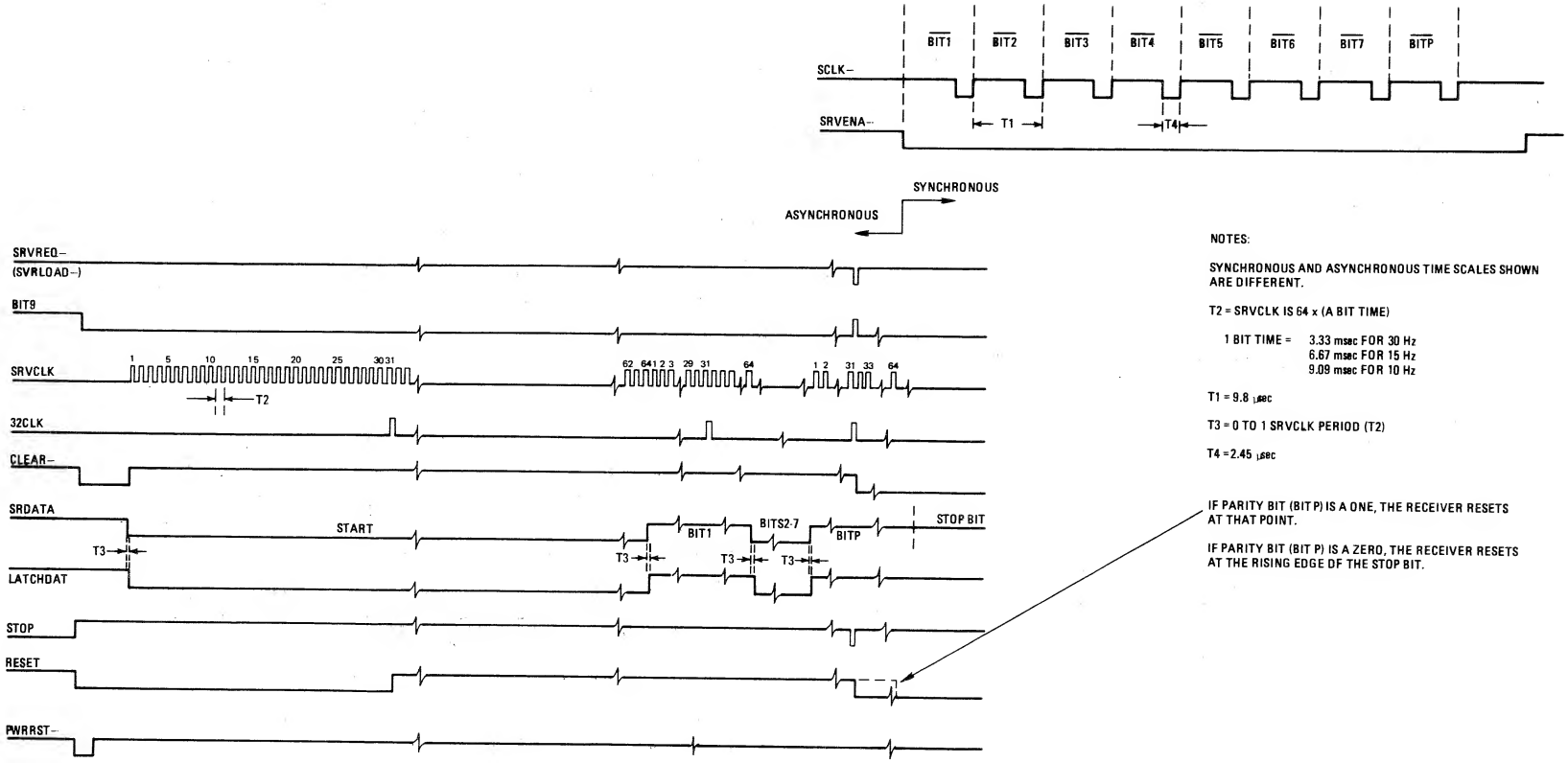

FIGURE 3-6.4. ASCII SERIAL RECEIVER TIMING DIAGRAM

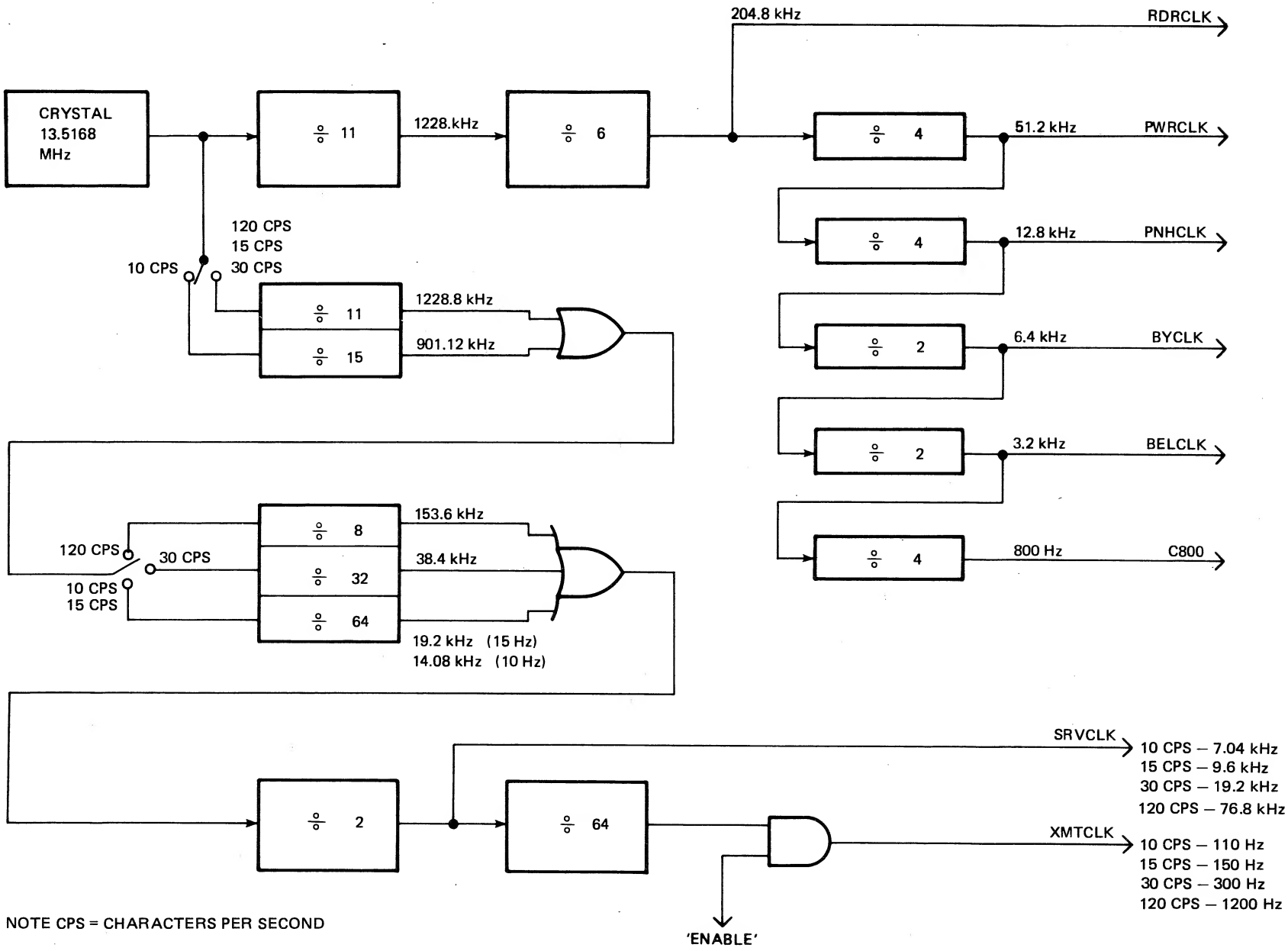

FIGURE 3-6.5. ASCII SYSTEM CLOCKS BLOCK DIAGRAM

EIA data set ready (EIADSR) – Must be a high level (>3.0V) to either transmit or receive

EIA clear to send (EIACTS) – Must be a high level (>3.0V) to transmit

EIA data terminal ready (EIADTR) – Held to a high level (>3.0V) by the terminal

EIA request to send (EIARTS) – Held to a high level (>3.0V) by the terminal.

EIA data carrier detect (EIADCD) – must be a high level (> 3.0V) to receive.

3-6.2 BAUDOT TRANSMIT/RECEIVE PC CARD. The Baudot Transmit/Receive card, block diagrammed in Figure 3-6.1, is composed of four major sections:

a. Transmitter

b. Receiver

c. System clocks

d. EIA control signals.

3-6.2.1 Transmitter. Upon receipt of a transmit enable (XMTENA) and eight system clocks (SCLK) from terminal control, the transmitter stores the data on the serial data bus in a buffer register and adds a start bit and stop bit to the data. After the character is stored in the output buffer, a timer starts which issues transmit clocks (XMTCLK) which clock the data out of the buffer at the speed (50, 75, or 100 baud) selected on the PC card SPEED switch. The TTL data then is sent through a TTL-to-EIA level converter to the transmission line.

At the start of a transmit enable, a transmitter busy (XMTBSY) flipflop is set which signals terminal control that the line is busy (LINBUSY), and no other character can be transmitted at that time. The transmitter continues to clock the output buffer until the total number of bits, including start and stop bits (7.5 bits at all speeds), are clocked to the output line. A transmit clock counter counts the transmit clocks and resets the transmitter after the data has been clocked to the line. The output data format is shown in Figure 3-6.6.

As long as the transmitter is transmitting continuously (no more than 0.5-bit time delay between transmit enables) and the duplex switch is set to half duplex, the receiver input data is held high (logic ONE); and the receiver is "locked out" from receiving any data from the line. If the BREAK key on the keyboard is depressed, the output line is held to a continuous low level (continuous space) as long as the BREAK key remains depressed. The Baudot transmitter timing diagram is shown in Figure 3-6.7. A transmitter/receiver schematic (Drawing No. 959197) is contained in Appendix C of this manual.

3-6.2.2 Receiver. The receiver is an asynchronous device which continuously monitors the transmission line. EIA data on the line is passed through an EIA-to-TTL level converter for use by the receiver. Upon receipt of a start bit (high to low transition from the line), the receiver starts timing for 0.5-bit time. If the line has remained low for at least a 0.5-bit interval, a latch is set which keeps the receiver from resetting until the whole character has been received. If the line does not remain low for at least 0.5-bit time, the receiver resets immediately and continues looking for a true start bit. When the start bit is recognized, it is clocked into an input buffer, and each succeeding data bit also is clocked into the buffer until the whole character is clocked in. Then the receiver is reset to search for the next start bit, the data in the input buffer is parallel-loaded to a serial data bus buffer, and a serial receiver request (SRVREQ) signals terminal control that a character has been received from the line. If the terminal is in half-duplex when a start bit is recognized, a flipflop is set (HLFDPX) which causes the line busy (LINBUSY) line to go high and inhibit the transmitter from sending any characters.

The transmitter will stay inhibited as long as the receiver continues to receive characters in half-duplex, with no longer than a character time between each character received. When terminal control sends a serial receiver enable and eight system clocks (SCLK) to the receiver, the data in the serial data bus buffer is clocked out to the serial bus. The Baudot code has only 5 bits, and the serial bus must have 8-bit codes, one for each system clock. Therefore, the last 3 bits clocked to the bus from the receiver are always three ONES. The clock (32CLK) which strobes the input data into the input buffer is derived from the serial receiver clock (SRVCLK), whose frequency is 64 times a bit time (as selected on the SPEED switch).

The 32 clock (32CLK) starts when the clear is removed from the receiver (a start bit is recognized). The first 32CLK comes at 0.5 bit time and then every bit time thereafter. If T is the bit time, the 7497 from which the SRVCLK is counted down to the 32CLK, will cause the data to be strobed into the input buffer within ±T/128 of the center of each bit time. A block diagram of the receiver is shown in Figure 3-6.1. A receiver timing diagram is shown in Figure 3-6.8, and a Baudot Transmitter/Receiver schematic (Drawing No. 959197) is contained in Appendix C of this manual.

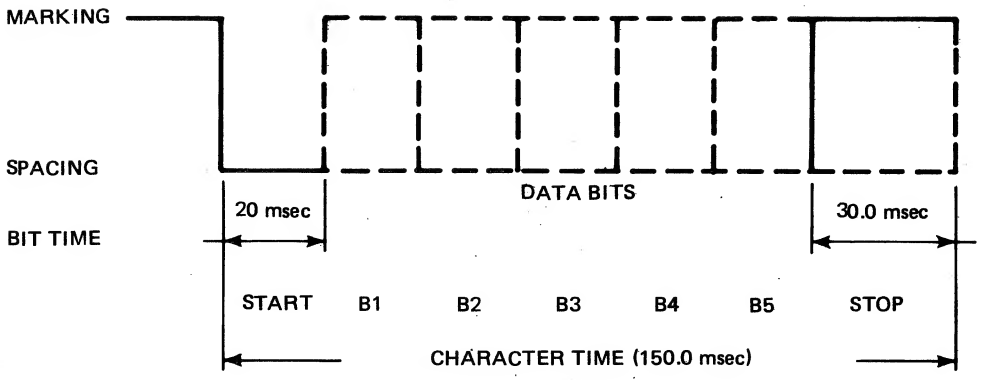

CHARACTER TIMING: 50 baud

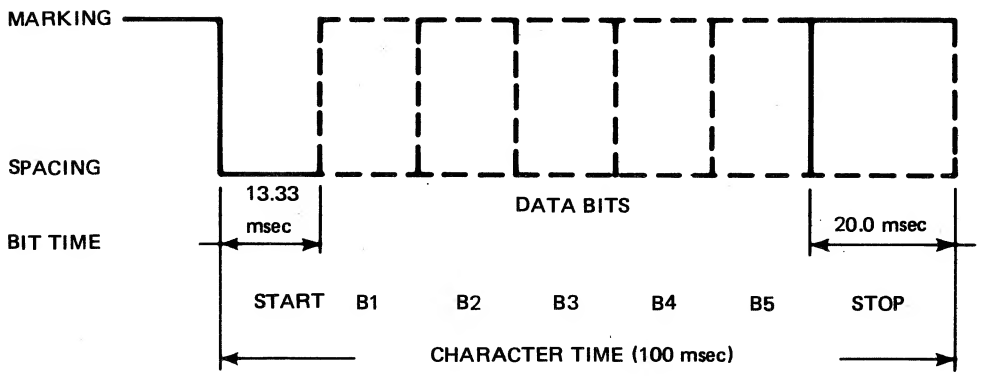

CHARACTER TIMING: 75.0 baud

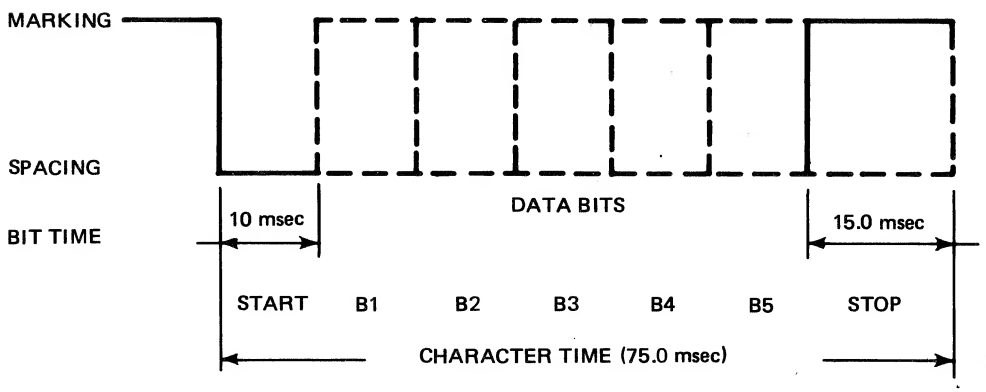

CHARACTER TIMING: 100 baud

FIGURE 3-6.6. BAUDOT LINE DATA FORMAT

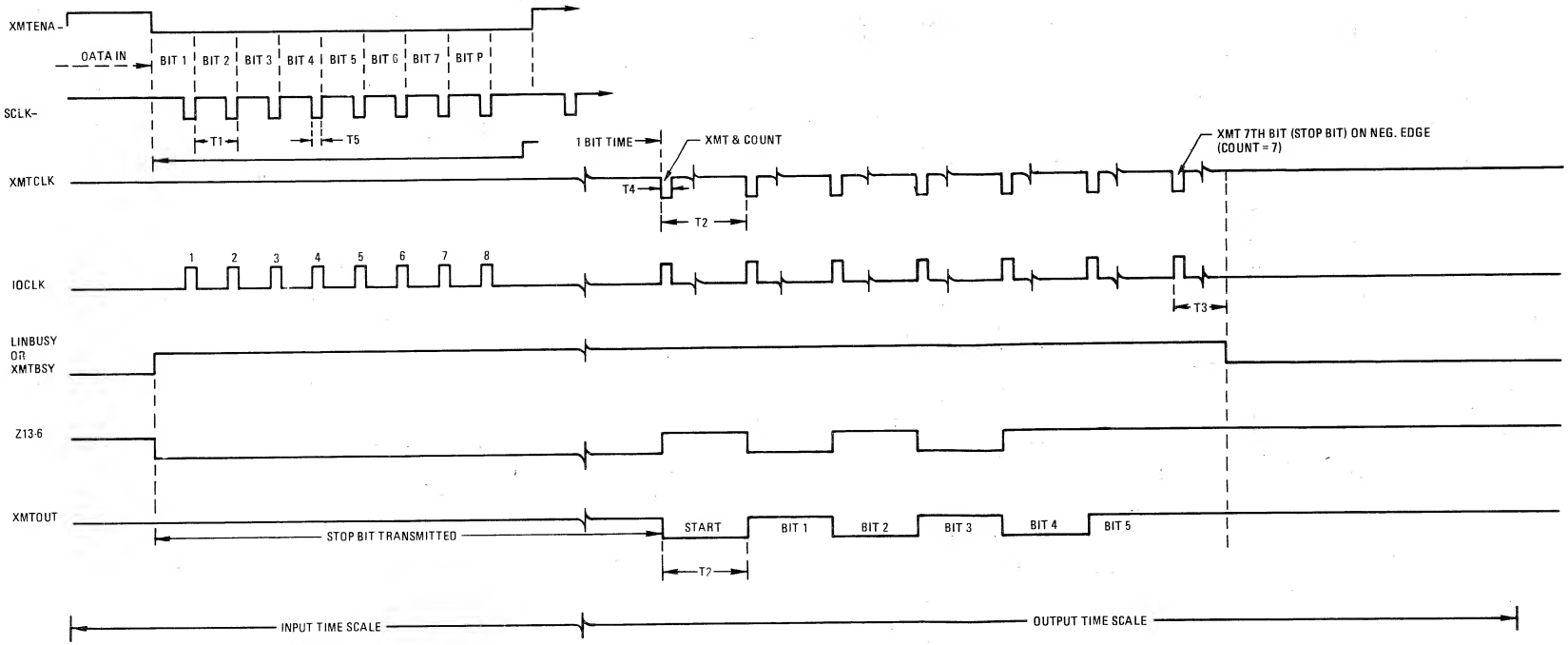

NOTES:
T1 = 9.8 μsec
T2 = 1 BIT TIME = 10 msec FOR 100 baud
= 13.33 msec FOR 75 baud
= 20 msec FOR 50 baud
T3 = 0.5-BIT TIME
T4 = 1 SRVCLK PERIOD = 1/64 BIT TIME
T5 = 2.45 μsec

REFERENCE DESIGNATORS ARE THOSE
SHOWN ON SCHEMATIC 959197 (APPENDIX C).

FIGURE 3-6.7. BAUDOT SERIAL TRANSMITTER TIMING DIAGRAM

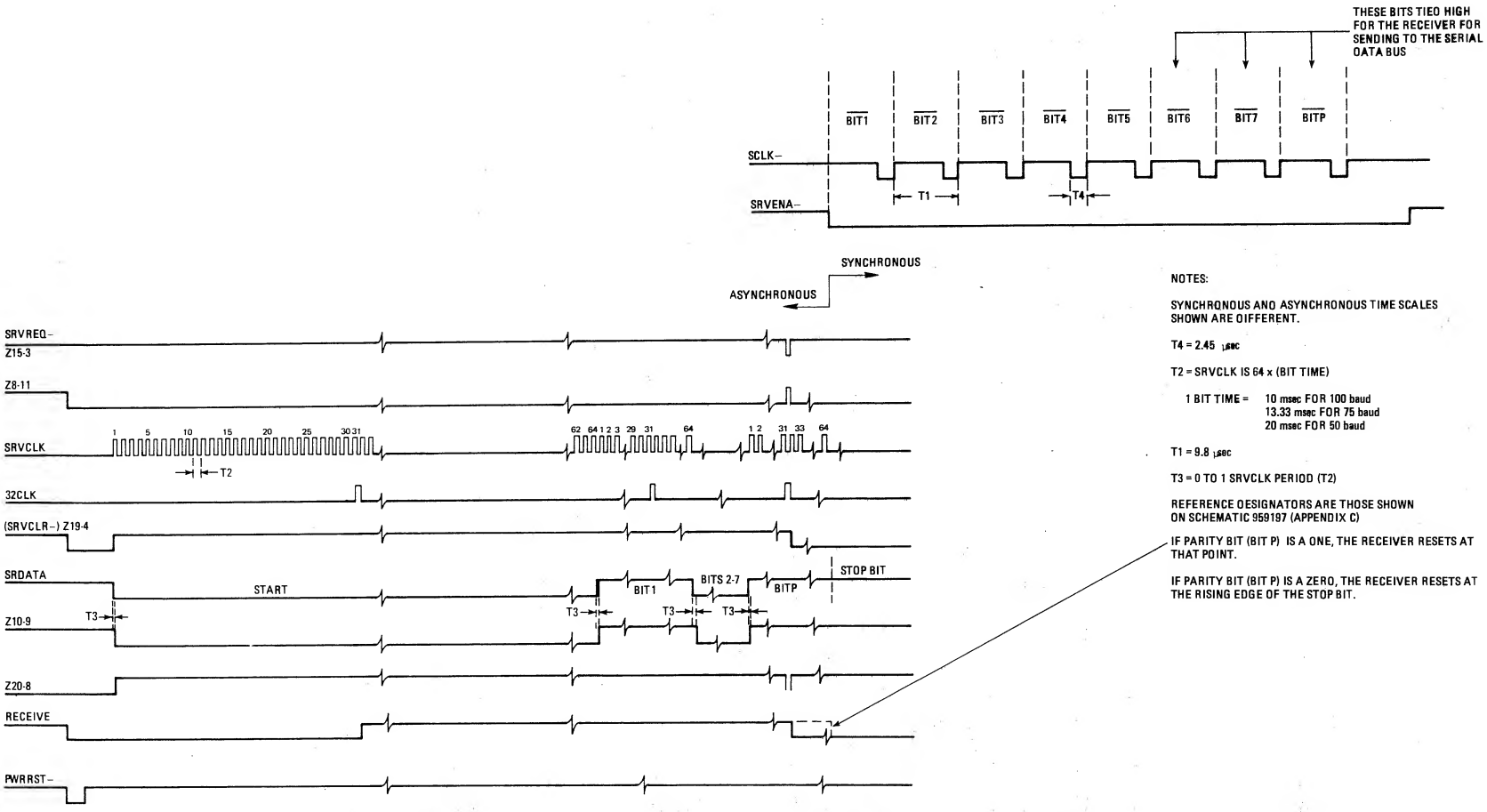

NOTES:

SYNCHRONOUS AND ASYNCHRONOUS TIME SCALES SHOWN ARE DIFFERENT.

T4 = 2.45 μsec

T2 = SRVCLK IS 64 x (BIT TIME)

1 BIT TIME = 10 msec FOR 100 baud
13.33 msec FOR 75 baud
20 msec FOR 50 baud

T1 = 9.8 μsec

T3 = 0 TO 1 SRVCLK PERIOD (T2)

REFERENCE DESIGNATORS ARE THOSE SHOWN ON SCHEMATIC 959197 (APPENDIX C)

IF PARITY BIT (BIT P) IS A ONE, THE RECEIVER RESETS AT THAT POINT.

IF PARITY BIT (BIT P) IS A ZERO, THE RECEIVER RESETS AT THE RISING EDGE OF THE STOP BIT.

FIGURE 3-6.8. BAUDOT SERIAL RECEIVER TIMING DIAGRAM

3-6.2.3 System Clocks. The entire clock system is derived from a single crystal (0.005 percent accurate) located on the Baudot Transmit/Receive PC card. The crystal frequency of 9.8304 MHz is then counted down to provide all system clocks used in the data terminal. A block diagram of the system clock structure is shown in Figure 3-6.9.

3-6.2.4 EIA Control Signals. The Baudot EIA control signals are the same as the ASCII signals described in Paragraph 3-6.1.4 above.

3-7 TERMINAL CONTROL.

3-7.1 KSR TERMINAL CONTROL. The KSR terminal control generates the clock and enable signals used to transfer data within the data terminal. Action is initiated by request signals. The keyboard request (KBDREQ–), serial receiver request (SRVREQ–), AUX1REQ–, and AUX2REQ– are 5-μsec wide pulses stored in flipflops until the respective enable signal is generated (KBDENA, SRVENA. AUX1ENAS, and AUX2ENAS), at which time the flipflops are cleared. When the terminal control senses a request and no outstanding request has priority, and the line is not busy (LINBUSY), and the printer is not busy, then the enable is generated. If the terminal is on-line (TERLIN), a transmit enable (XMTENA–) is generated the same time as the other enable. If the terminal is not ON-LINE, or ON-LINE and in HALF-DUPLEX, then receive enables (PRNENA, AUX1ENAR, AUX2ENAR) also are generated.

When terminal control senses a serial receiver request and the terminal is on-line and not busy, a serial receiver enable (SRVENA–) and receive enables are generated. When any enable is generated, eight system clocks also are generated to clock the data to and from the data bus. Devices receiving data from this bus (PRINTER, AUX1R, AUX2R, or transmitter) use the leading edge of this clock (SCLK–). Devices sending data to the bus (SERIAL RECEIVER, AUX1S, AUX2S, KEYBOARD) use the trailing edge. A timing diagram is shown in Figure 3-7.1. A block diagram is shown in Figure 3-7.2.

Priority is as follows:

a. Serial receiver

b. AUX1S

c. AUX2S

d. KEYBOARD.

3-7.2 ASR TERMINAL CONTROL. The ASR terminal control generates the clock and enable signals used to transfer data within the terminal. Terminal control logic generates a status enable (STAENA) and eight system clocks (SCLK) to check the status of the keyboard and printer (LINE/LOCAL/OFF). It also checks for reader feed, reader error, record-buffer-full or end-of-tape on either cassette. This is done by clocking this information into an eight-bit serial-to-parallel register using status enable and eight system clocks. All of the above information, along with the recorder and playback status signals (RECLINE and RDRLINE), are loaded into a register and are used to determine which devices are on the local bus and which are on the line bus. The output of this register is gated with remote OFF signals (PRNROF, RECROF, and RDRROF) and is fed into a two-line-to-one-line data selector/multiplexer. The enable for the multiplexer is a combination of the presence of local data (DATLOC) and line data. The select line of the multiplexer selects either the line or local half of the network. Therefore, if a device is in the local mode and the data is local data, the multiplexer will select that device to receive an enable. The outputs of the multiplexer control which of the four devices that receive data (AUX1, AUX2, recorder, and printer) will get the data.

When a request (AUX1REQ, AUX2REQ, RDRREQ, BUFREQ, KDBREQ, or SRVREQ) is received by terminal control, it is stored in a flipflop until that device receives an enable. These requests are synchronized by clocking them into register with the terminal control clock (TCCK). The synchronized request signals then are gated with the busy signals (LINBUSY and LOCBUSY) and the device line and local status signals. From there the signals are fed into the priority logic. If all requests arrive at the same time, priority is as follows:

a. Serial receiver

b. Auxiliary 1

c. Auxiliary 2

d. Playback

e. Recorder (print buffer function)

f. Keyboard.

Once a device is given priority and no status enable is in progress, terminal control goes to state ONE and gives an enable to the device with priority and any other devices set

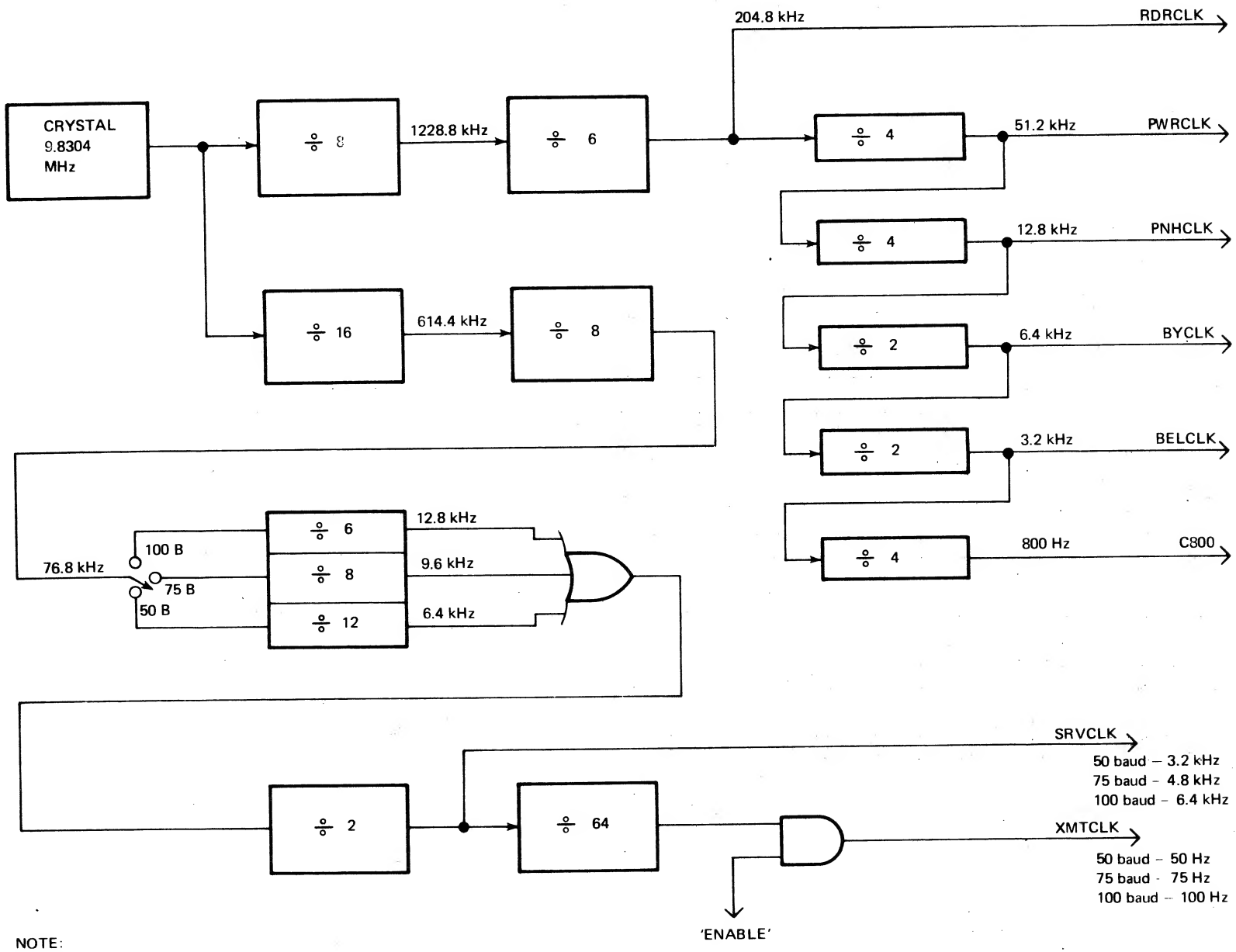

NOTE:
SYSTEM CLOCKS ARE LOCATED ON THE TRANSMIT/RECEIVER PC CARD, SLOT A5.

FIGURE 3-6.9. BAUDOT SYSTEM CLOCKS BLOCK DIAGRAM

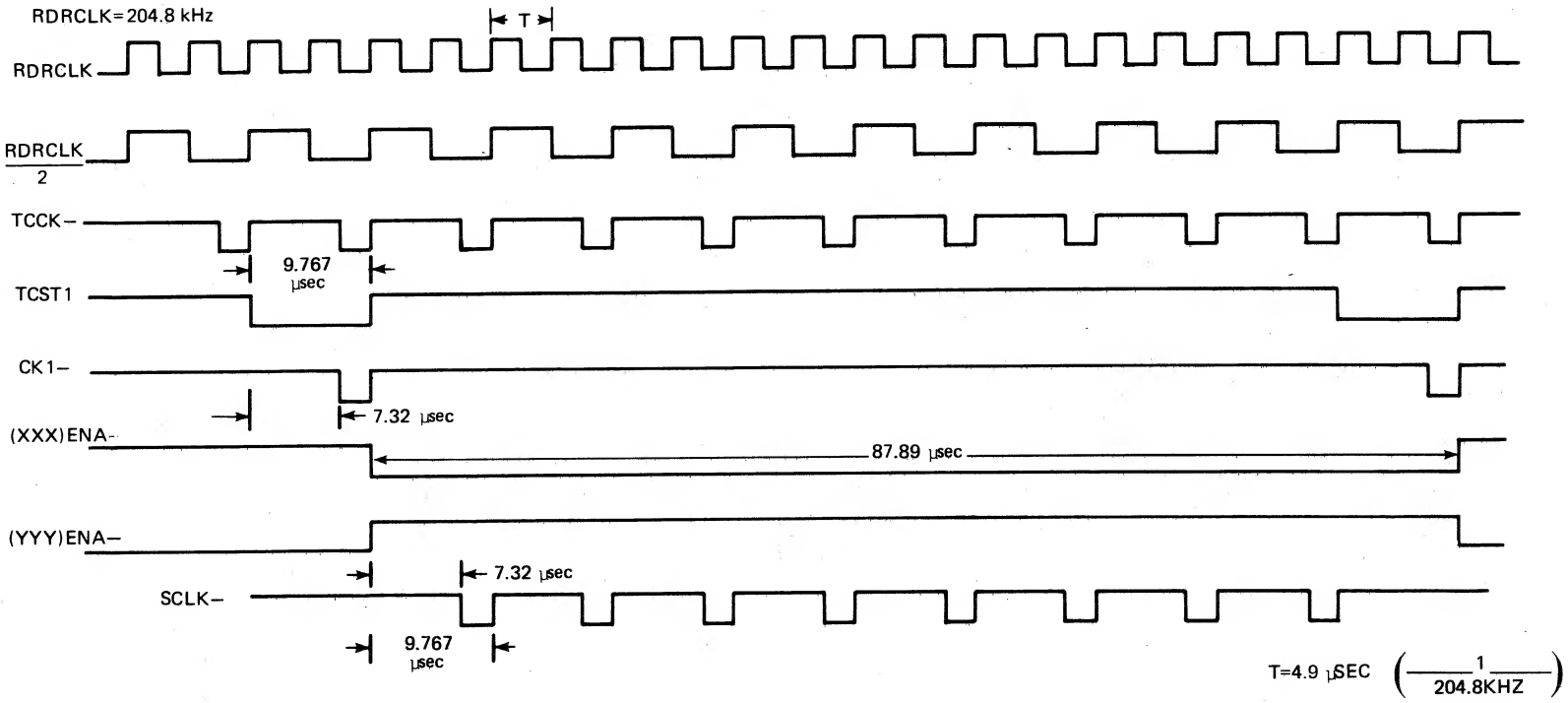

FIGURE 3-7.1. TERMINAL CONTROL SYSTEM TIMING DIAGRAM

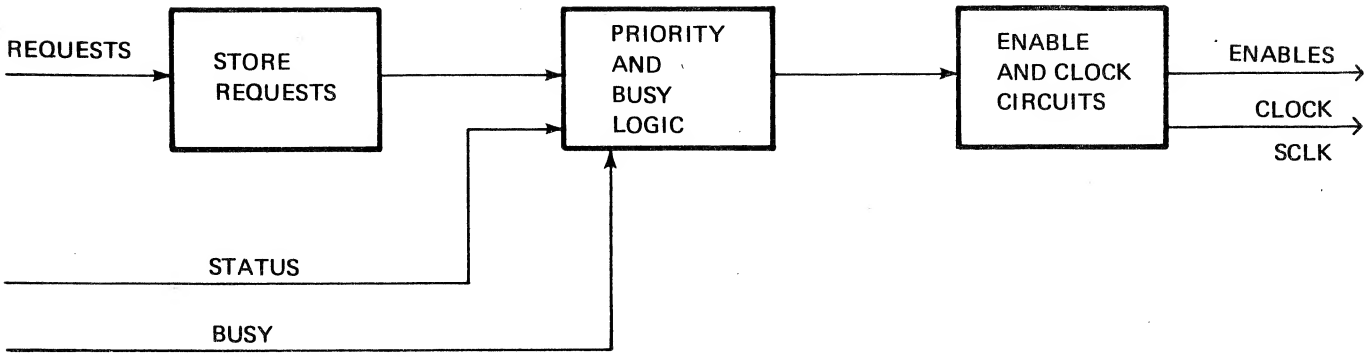

FIGURE 3-7.2. TERMINAL CONTROL BLOCK DIAGRAM

up to receive data on the same bus as the priority device. Terminal control stays in state ONE for 80μsec, during which eight system clocks are sent to all devices. Ten μsec after state ONE the device enables will go off and the status enable is generated as described above. If the device with priority is in the local mode, terminal control will bring up the local busy line and hold it for 800 to 900μsec. The busy line also may be held up by AUX1BUSY, or record-buffer-full, or by the printer-busy signal. The local busy line will block devices in the local loop from receiving enables but will not affect the line loop.

The ASR terminal control timing diagram is shown in Figure 3-7.1; a block diagram is shown in Figure 3-7.2.

3-8 CASSETTE SYSTEM.

The cassette system consists of two cassette transports and two motion control circuits. The playback control can be used on either transport but not both simultaneously. The playback control reads data from the tape one block at a time and stores it in a memory. It can then send data from the memory, one block at a time, one character at a time, or continuously.

The record control can be used on either transport but not both simultaneously. The record control accepts data from the terminal and stores it in a memory. The data can be edited while in the memory (within certain limitations) and then written on tape in line or continuous format. A block diagram of the cassette system is shown in Figure 3-8.1.

3-8.1 RECORD CONTROL. Record control, block diagrammed in Figure 3-8.2, consists of three PC cards: the Record Control PC card, the Record Buffer PC card, and the Tape Read/Write Control PC card.

NOTE

The Record Buffer PC card is available in two versions: the standard format version (TI Part No. 960903) and a dual-format version (TI Part No. 962285). The Tape Read/Write PC card also is available in two versions: standard format (TI Part No. 962281) and dual format (TI Part No. 969451). The terminal is equipped either with all dual-format PC cards or all standard format PC cards. The Record Control PC card (TI Part No. 960909) is the same for either set of PC cards. The difference between the two sets of PC cards is that the dual-format PC cards have strappable options which permit the

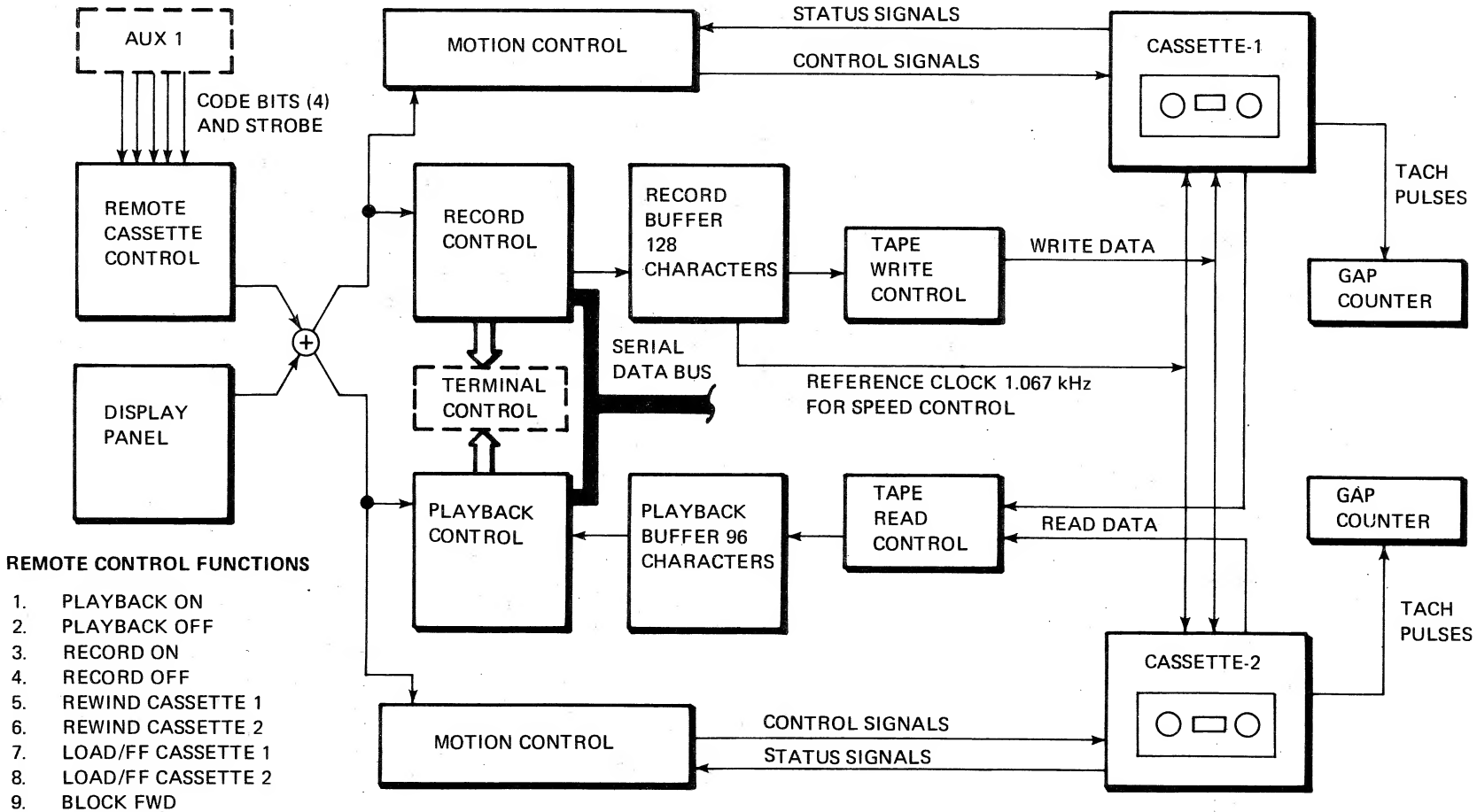

REMOTE CONTROL FUNCTIONS

1. PLAYBACK ON
2. PLAYBACK OFF
3. RECORD ON
4. RECORD OFF
5. REWIND CASSETTE 1
6. REWIND CASSETTE 2
7. LOAD/FF CASSETTE 1
8. LOAD/FF CASSETTE 2
9. BLOCK FWD
10. BLOCK REV
11. CHARACTER FWD
12. CASSETTE 1 RECORD
13. CASSETTE 2 RECORD
14. CASSETTE 1 STOP
15. CASSETTE 2 STOP

FIGURE 3-8.1. CASSETTE SUBSYSTEM BLOCK DIAGRAM

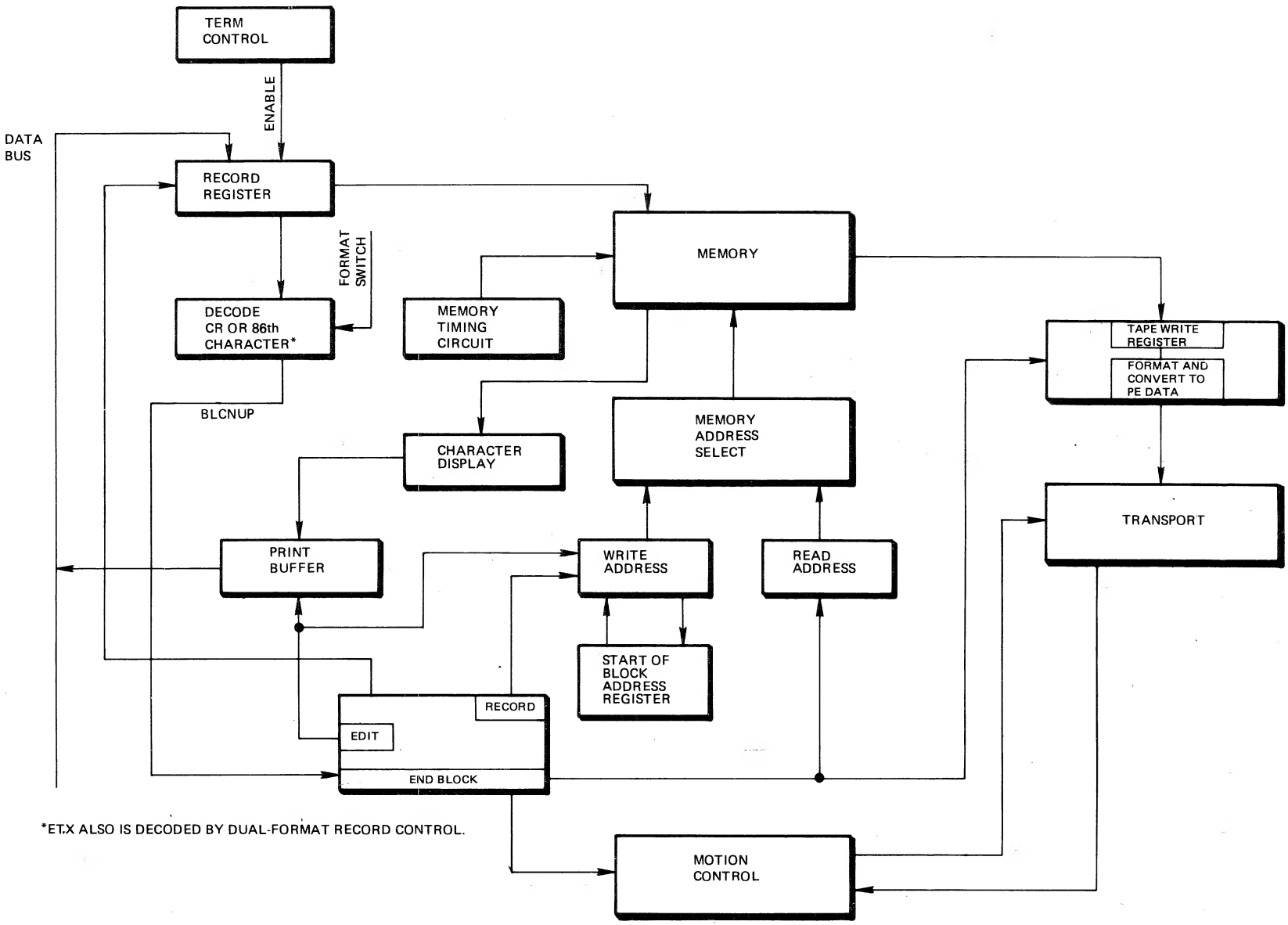

FIGURE 3-8.2. RECORD CONTROL BLOCK DIAGRAM

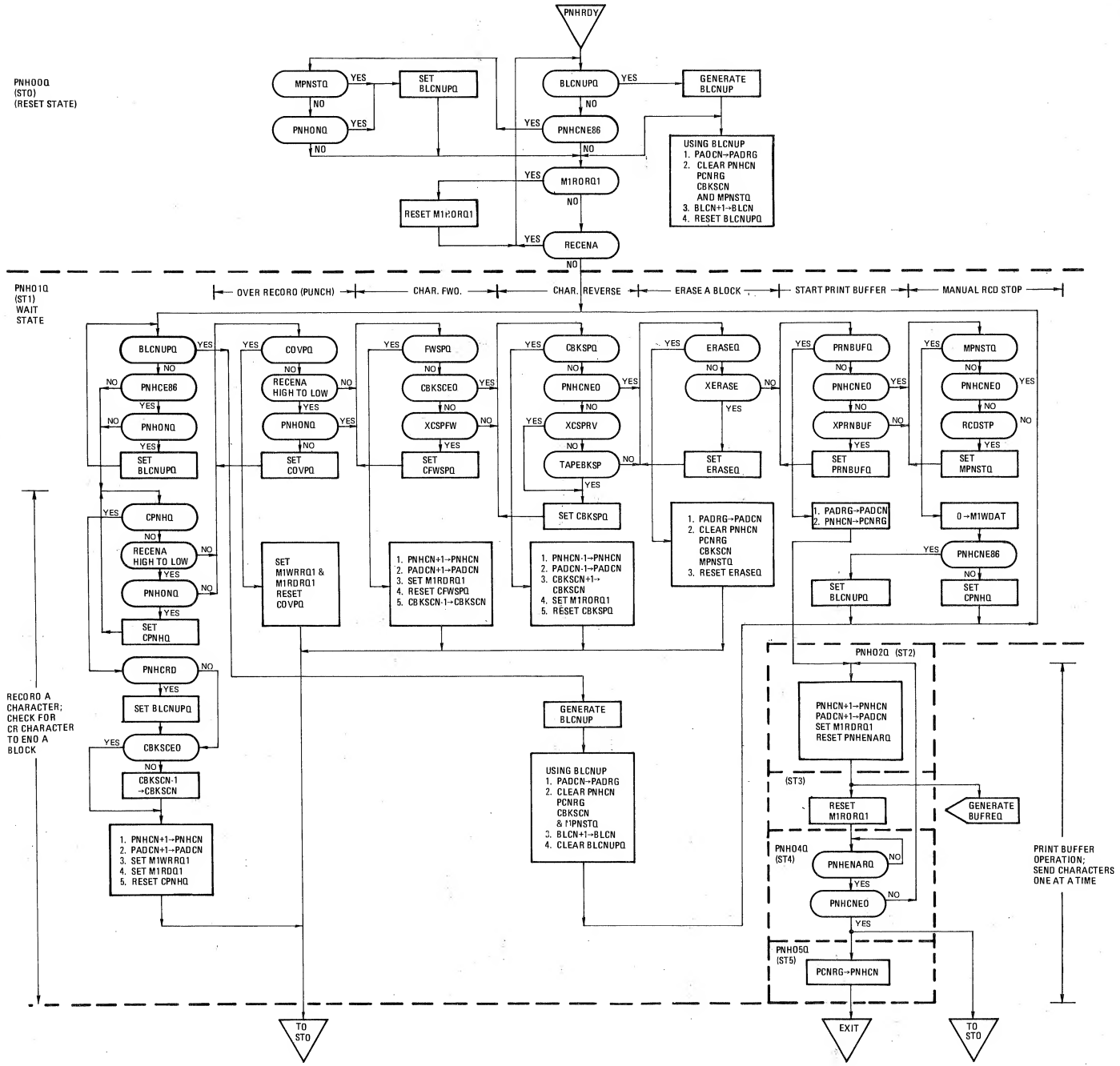

NOTE: 1. WHEN LOW, PNHRDY RESETS PNH01Q THROUGH PNH05Q AND PRESETS PNH00Q.
2. ALL COUNTERS AND FLIP-FLOPS ARE CLEARED BY PNHRDY.

FIGURE 3-8.3. RECORD CONTROL FLOW DIAGRAM

handling of either standard-formatted or binary-formatted data.

In addition, a strappable option permits the recording of a block of data (in CONTinuous tape format) to be initiated when the ETX control character is received from the communication line (see Sections 2-6.4 and 2-7.6 for implementation of this option).

The basic operation of the standard-format and dual-format PC cards is the same. Any differences in operation of these two versions are noted in the following description.

Record control accepts data and stores it in a 1024-bit memory. The last character entered into the memory is displayed on the character display. While data is in the memory, it can be modified using the tape forward (TAPE→) and tape reverse (←TAPE) keys on the keyboard. Data in the buffer can be printed without altering the contents of the buffer by activating the PRINT switch, and data in the buffer can be erased by activating the ERASE switch. In line format, record control puts the contents of the buffer on tape when the recorder is manually switched OFF, or when 86 characters are loaded into the buffer, or when the carriage return character is decoded. In CONTinuous tape format, record control transfers the contents of the buffer to tape either when the recorder is manually switched OFF, or when 86 characters are loaded into the buffer.

NOTE

When strapped for standard format operation, the optional dual-format record control also transfers the contents of the buffer on tape when the ETX (end of text) control character is decoded. The ETX decode is a strappable option (see Sections 2-6.4 and 2-7.6 for implementation instructions).

Each of these functions is explained below. A record control flow chart is shown in Figure 3-8.3.

The record control uses recorder enable (RECENA) and eight system clocks (SCLK) to clock data into a serial-to-parallel converter if the recorder is ON (PNHONQ). If the recorder is OFF, the data is clocked in on top of the old data (overpunched). This data is then decoded and loaded into a parallel-to-serial register. If in LINE tape format and a carriage return is decoded, or if in CONTinuous tape format (dual-format record control only) and an ETX is decoded (ETX option installed), bit 8 is forced to a ONE; otherwise, bit 8 is forced to a ZERO.

The first data bit is now clocked into the 1024-bit memory using the memory write enable (M1WRENA). Then the first bit is read from the memory into the character display by MEMORY-1 read clock (M1RD1CK). Then the memory address is changed, and the next data bit is clocked to the memory data line using the other edge of M1RD1CK). Then another write enable is generated, and bit 2 is stored in the memory. In standard format operation, this process is repeated until all 8 bits (7 data bits and 1 bit for carriage return decode, and ETX decode if enabled on Dual-Format PC cards) are stored in the memory and displayed. Figure 3-8.4 shows the memory timing sequence.

NOTE

In binary-format operation the process is repeated until all 8 bits are stored in the memory and displayed.

Each time a character is sent to the memory (CPNHQ), the punch address counter and the punch character counter are incremented by one. If the character backspace counter is not equal to zero (i.e., the buffer has been backed up), it is decremented by one. If a carriage return has been decoded in line format, or if the punch character counter is equal to 86, the block counter is incremented by one.

NOTE

If an ETX control character is decoded by the Dual-Format Record Buffer when in CONTinuous tape format, the block counter is also incremented by one.

This process loads the contents of the punch address counter into the punch address register and clears the punch counter, the punch counter register, and the character backspace counter. The tape write controller now senses that a block is to be written on tape (BLCN≠0) and will start the tape write controller. The tape write controller then starts moving the tape (TPWFW), loads 170 into the block character counter (256-86=170), and writes the remainder of the interrecord gaps as the tape comes up to speed (CNTQ).

When the tape is up to speed, the preamble (01010101) is written on tape, after which the first character is read from the memory into the write data register using M1RDRQ2 and M1RD2CK. The first character then is clocked out of this register by M1RD2. Then the block character counter and tape write address counter are incremented by one. This process continues until either the block character counter is equal to 256 (86 characters) or the end-of-block signal (WRTEBD) is sensed. If end-of-block is sensed, the tape write controller will write null characters on the tape until the block character counter is equal to 256. When the

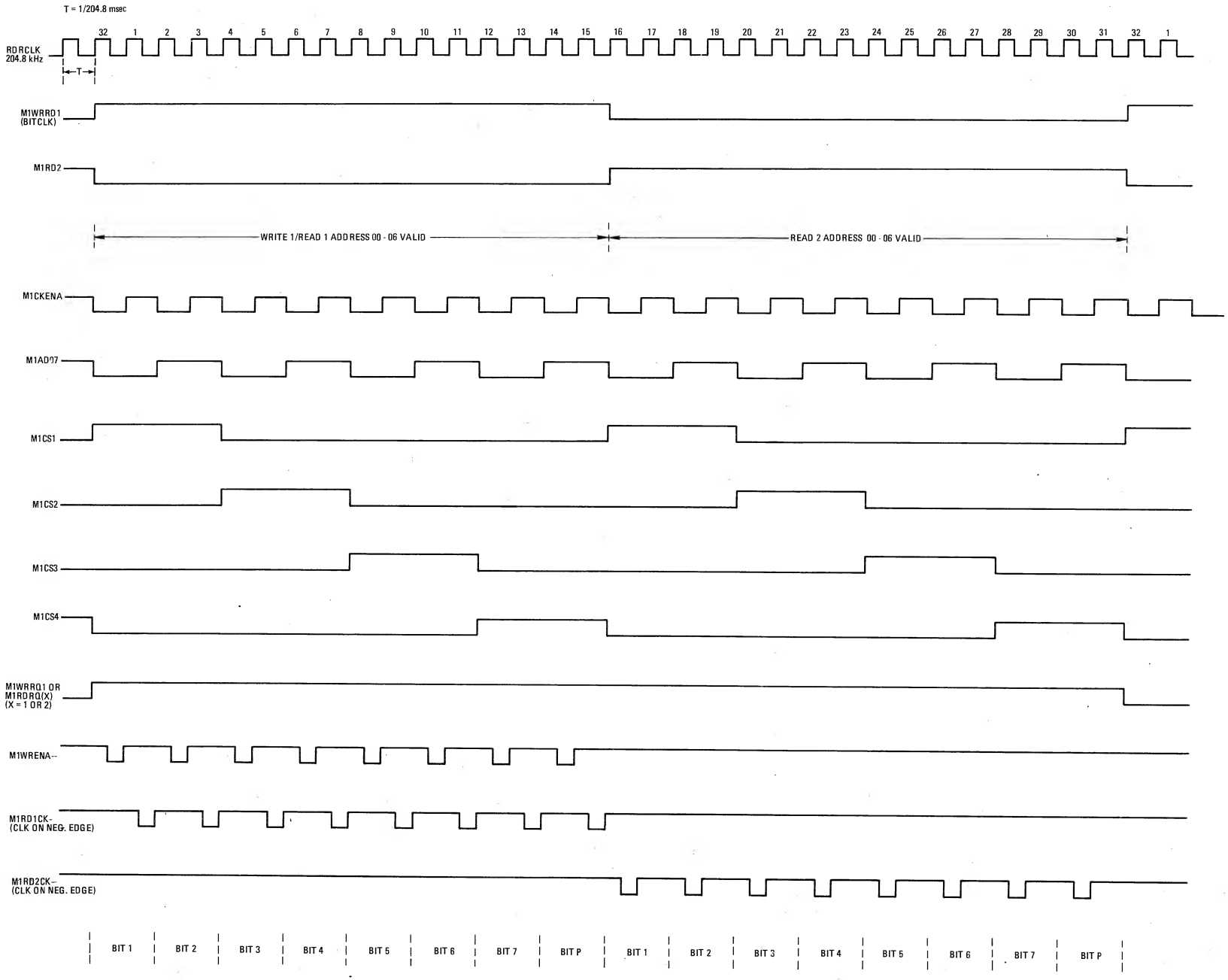

FIGURE 3-8.4. RECORD MEMORY TIMING DIAGRAM

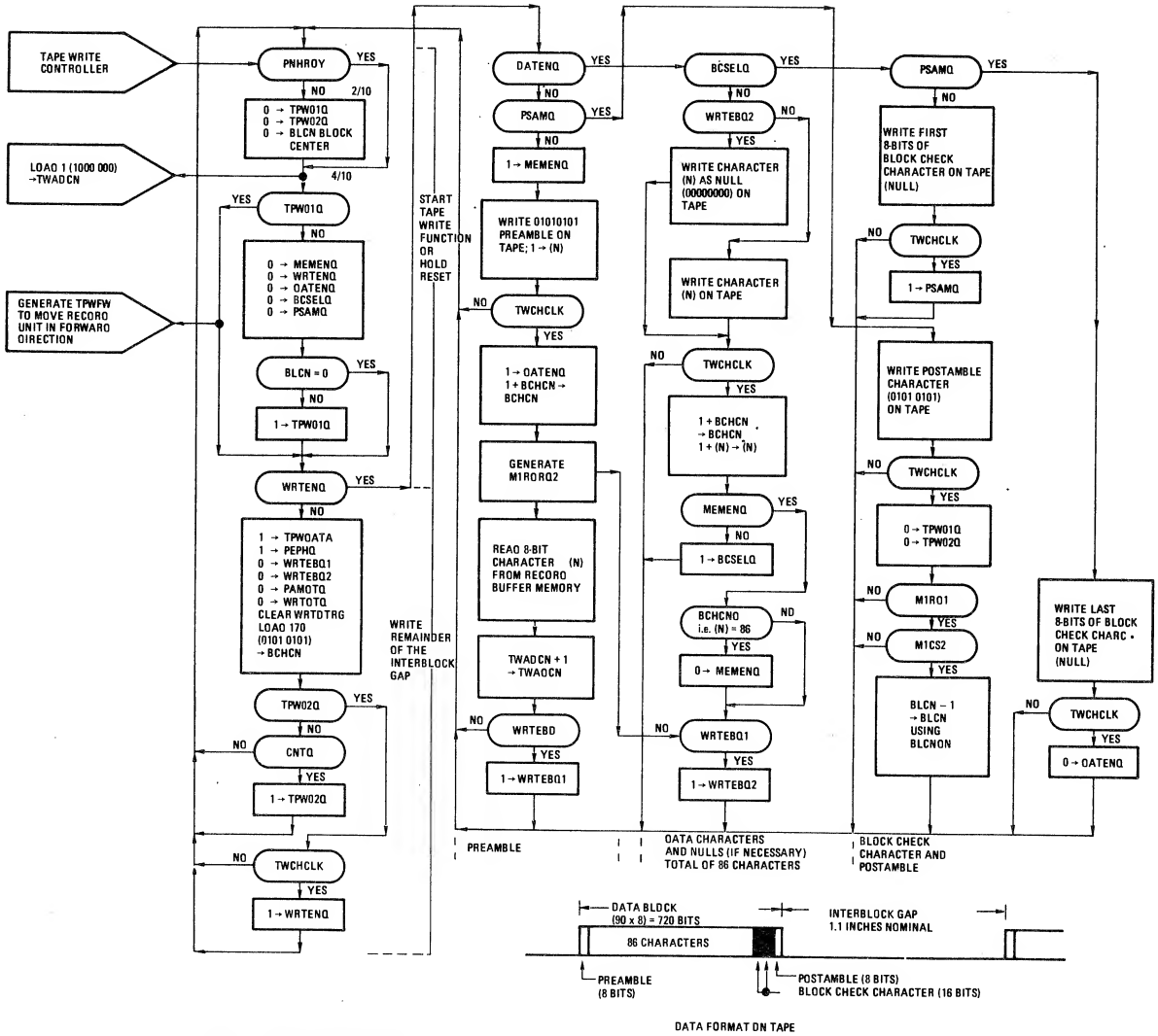

BCHCN: BLOCK CHARACTER COUNTER
8 BITS LONG.

BLCN: BLOCK COUNTER
4 BITS LONG (MAX. COUNT = 15)
CONTAINS DIFFERENCE BETWEEN
NUMBER BLOCKS RECEIVED
AND NUMBER BLOCKS
WRITTEN ON TAPE

CNTQ: OUTPUT OF GAP COUNTER

(N): VARIABLE USED IN FLOW CHART ONLY.

TWADCN: TAPE WRITE ADDRESS COUNTER
FOR RECORD BUFFER (MEMORY-1)
7 BITS LONG.

WRTDTRG: WRITE DATA REGISTER

WRTEBD: END-OF-BLOCK FLAG
(8TH BIT OF WRITE DATA REGISTER)

FIGURE 3-8.5. TAPE WRITE CONTROLLER FLOW DIAGRAM

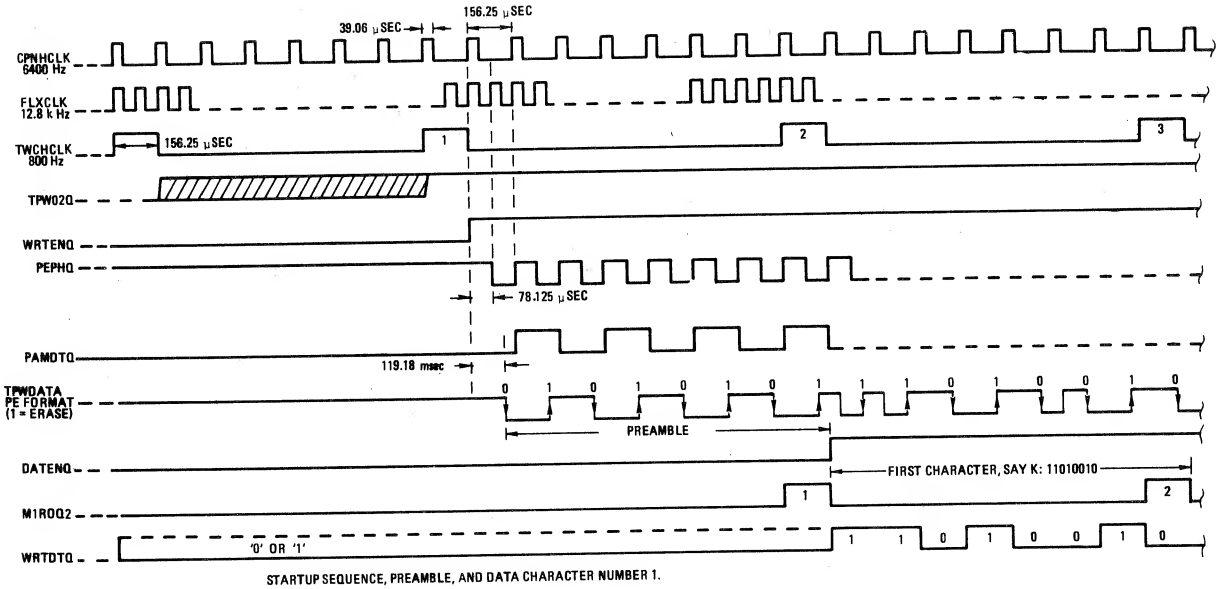

STARTUP SEQUENCE, PREAMBLE, AND DATA CHARACTER NUMBER 1.

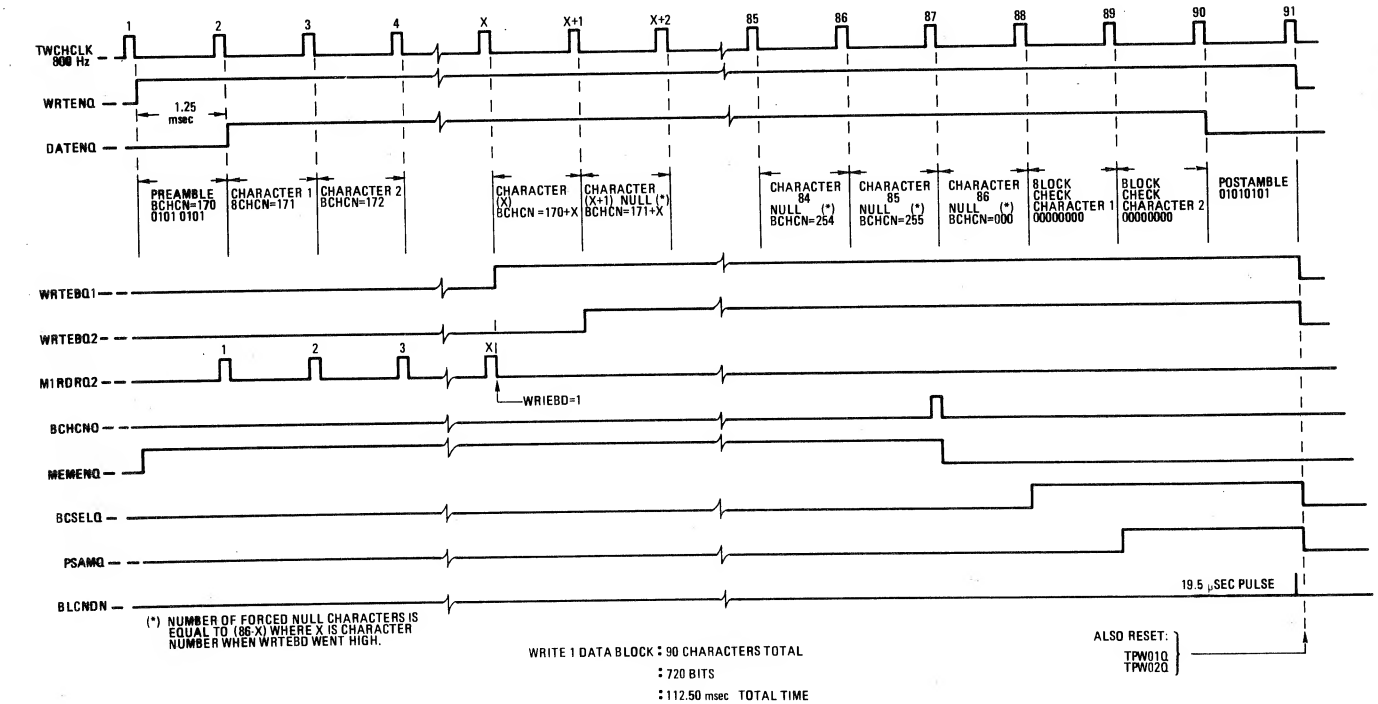

FIGURE 3-8.6. TAPE WRITE CONTROLLER TIMING DIAGRAM

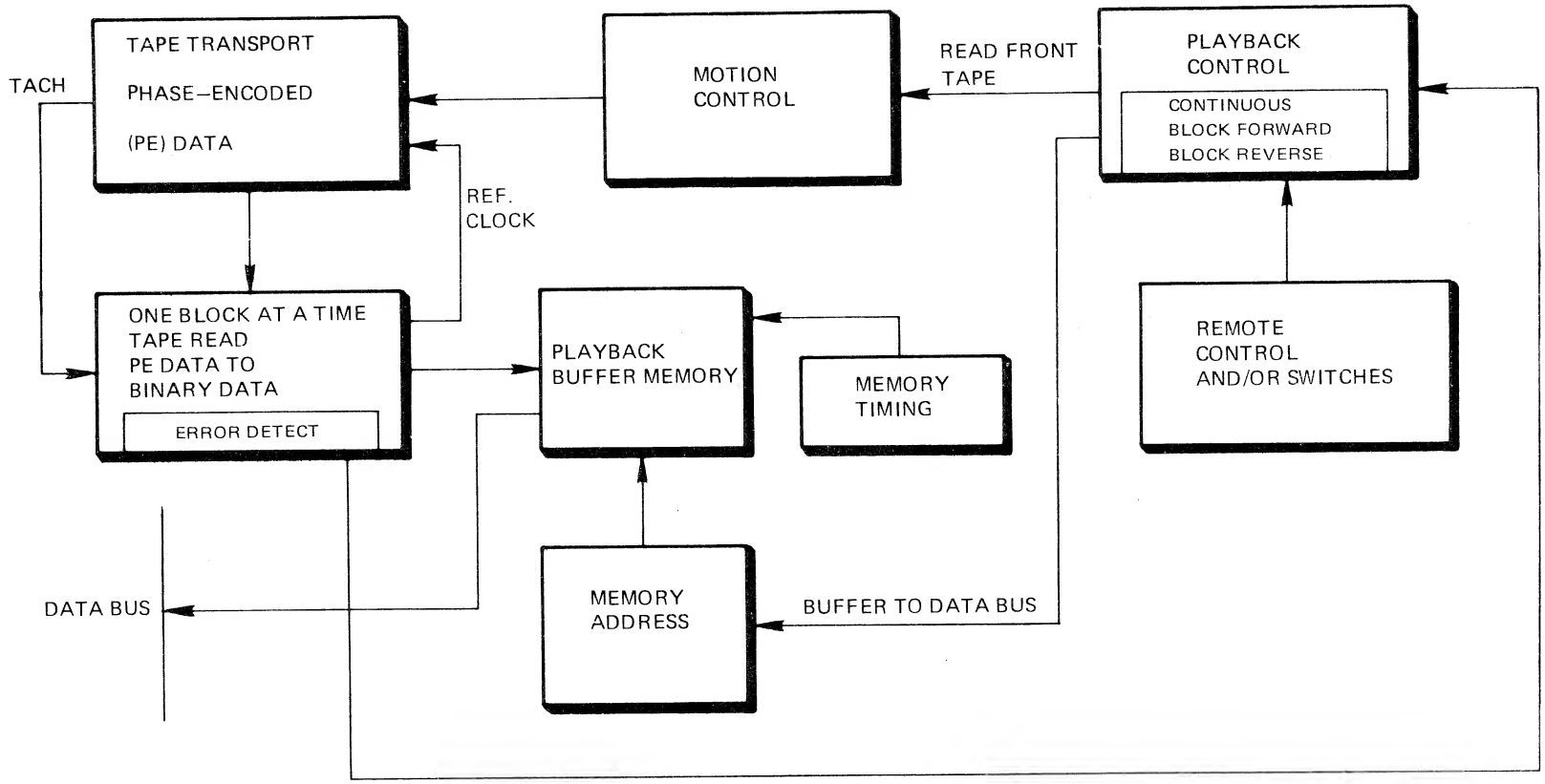

FIGURE 3-8.7. PLAYBACK CONTROL BLOCK DIAGRAM

counter is equal to 256 (86 characters), the tape write controller writes two block check characters and the postamble on tape. The block check characters are nulls (00000000) and the postamble is (01010101). The block counter is now decremented by one, and the tape write controller checks for another block ready to be written after the interrecord gap. A flow chart and timing diagram for the tape write are shown in Figures 3-8.5 and 3-8.6.

As long as data is in the buffer (punch character counter $\neq 0$) and the recorder is in the local mode, the buffer may be edited. Activating the TAPE (backspace) key on the keyboard will decrement the punch character counter and the punch address counter by one, and it will add one to the character backspace counter. It will then read the data from the new memory location into the character display using M1RDRQ1.

If the TAPE (forward space) key is depressed and the backspace counter is not equal to zero, then the backspace counter will be decremented by one, and the punch counter and the punch address counter will be incremented by one. Data from the new memory location is read into the character display using M1RDRQ1.

The contents of the record buffer can be erased by activating the ERASE switch. This will load the contents of the punch address register (last memory location of the previous block) into the punch address counter. It also clears the punch counter, the punch counter register, and the backspace counter.

The contents of the record buffer may be printed out if the RECORD and PRINTER switches are both in the LOCAL mode, and the PRINT switch is activated. This loads the punch address register (last memory location of previous block) into the punch address counter and also loads the punch character counter into the punch counter buffer register. Record control then decrements the punch character counter by one and increments the punch address counter by one. Record control then reads the first character from the buffer memory into the character display register, and issues a buffer request to terminal control (BUFRREQ). When terminal control sends back an enable (RECENA–), the contents of the display register are clocked to the data bus using the system clock (SCLK). If the punch character counter is not equal to zero, record control decrements the punch character counter and increments the punch address counter again and continues as before. When the punch counter does equal zero, the punch counter buffer register is loaded back into the punch character counter, and the record control returns to state ZERO and waits.

*This PC card is obsolete.

3-8.2 PLAYBACK CONTROL. Playback control, block diagrammed in Figure 3-8.7, is composed of four major sections:

a. Reader controller

b. Tape read controller

c. Playback buffer memory

d. Block backspace controller.

Differences between the standard format playback control (TI Part No. 960905*) and the dual format playback control (TI Part No. 981319 or 969453*) are noted in the following description.

3-8.2.1 Reader Controller. The reader controller controls the operative mode of the playback; i.e., continuous run, one block at a time, one character at a time, or one block reverse. Only one of these modes may be operative at one time, and no mode change is possible while one of the modes is already active (playback ON lamp is illuminated). Figure 3-8.8 shows the entire playback function in flow diagram form.

Upon receiving a mode command such as continuous start (CONT), the reader controller turns off the keyboard if both the reader and keyboard are in the same line mode (either on-line or off-line). In addition, before starting the tape read controller to read data from the tape, the reader controller checks that the playback is ready (cassette in place, door closed, etc.). If not ready, any mode (error or buffer-full) flipflops set are reset. A block backspace (block reverse) command always resets the error and buffer-full flipflops; this allows an error block to be reread as if the block were being read for the first time.

If a bit dropout is detected by the tape read controller while reading the tape, an error flipflop is set. If the stop-on-error option is not enabled on the Playback Control PC card (slot XA-4, ASR upper unit), the error block is sent to the serial data bus. If the stop-on-error option is enabled on the Playback Control PC card, the tape read controller stops on the block in which the error is detected. See paragraph 2-6.2 of this maintenance manual for instructions to enable the stop-on-error option. The error status may be cleared three ways: (1) a block reverse command will clear the error and allow the block to be reread; (2) a block forward command will clear both the error and the buffer-full flipflops and cause the error block to be skipped and reading to continue in the mode used before the error was detected; (3) a continuous start command will cause

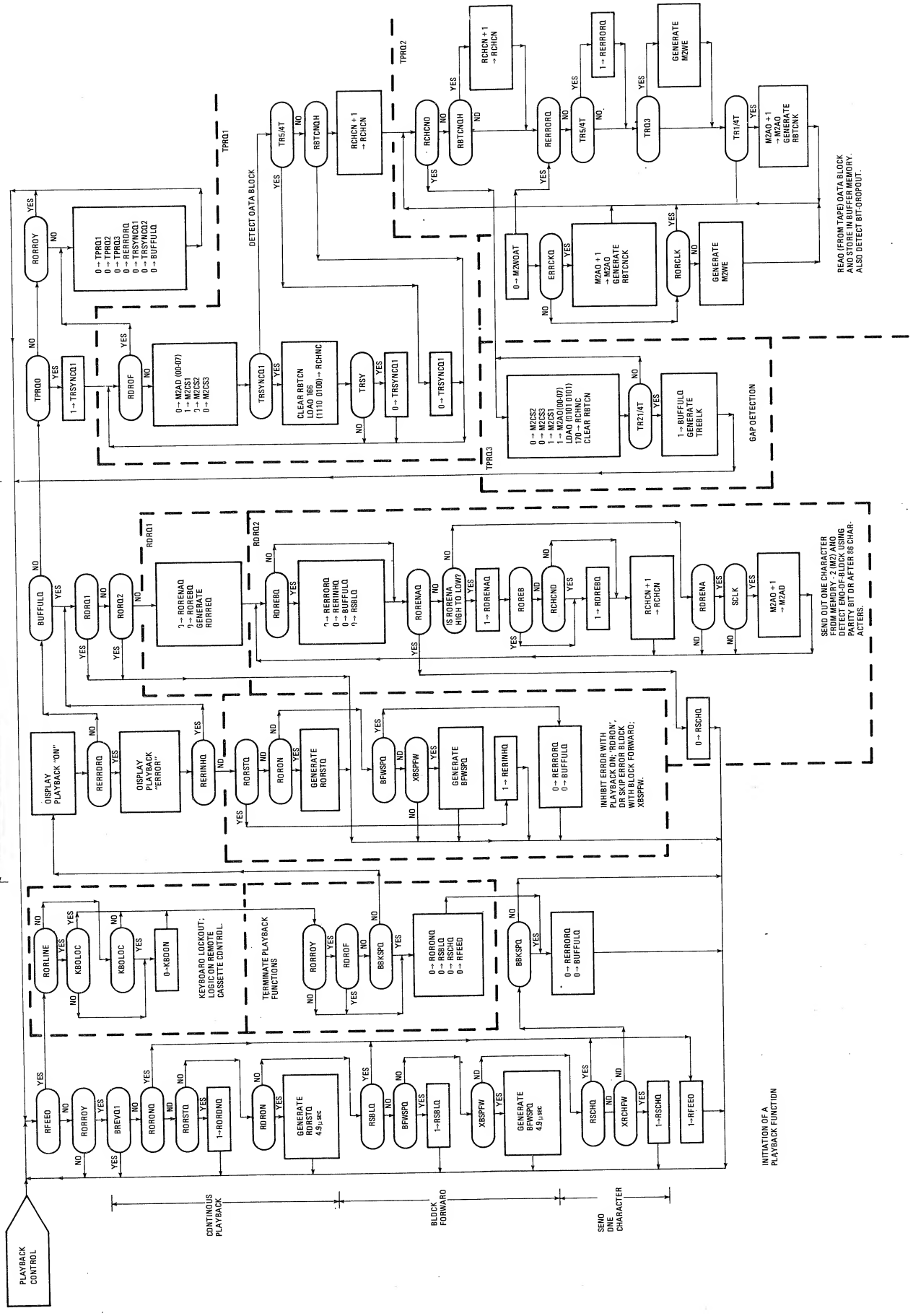

FIGURE 3-8.8. PLAYBACK CONTROL FLOW CHART

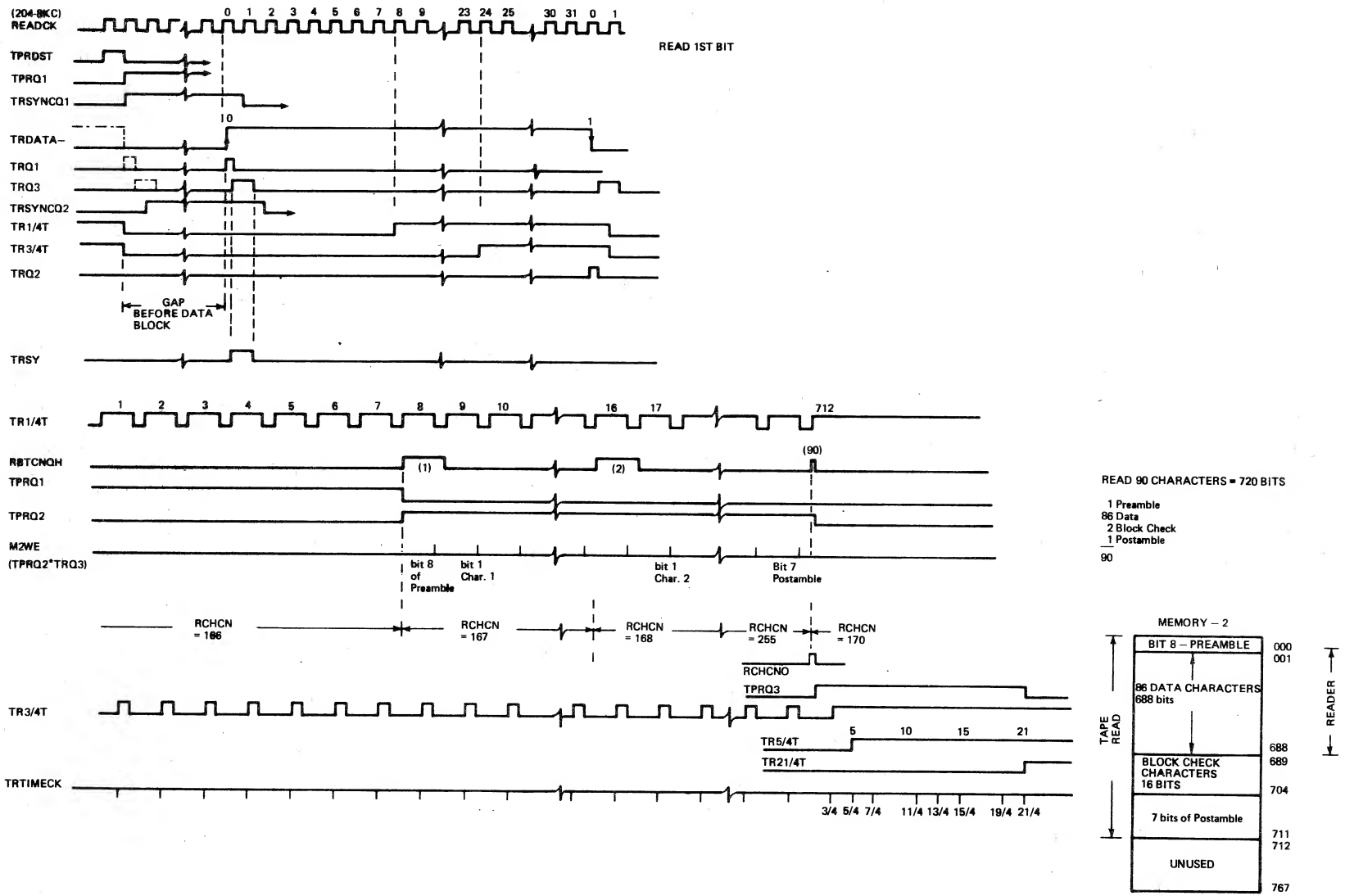

FIGURE 3-8.9. TAPE READ CONTROLLER TIMING DIAGRAM

CHARACTER 1	CHARACTER 2 TO CHARACTER 87	CHARACTER 88	CHARACTER 89	CHARACTER 90
PREAMBLE 01010101	DATA CHARACTERS UP TO 86 OR NULL CHARACTER TO 86 IF DATA IS LESS THAN 86 CHARACTERS	NULL CHARACTER	NULL CHARACTER	POSTAMBLE 01010101

FIGURE 3-8.10. BLOCK OF DATA ON TAPE

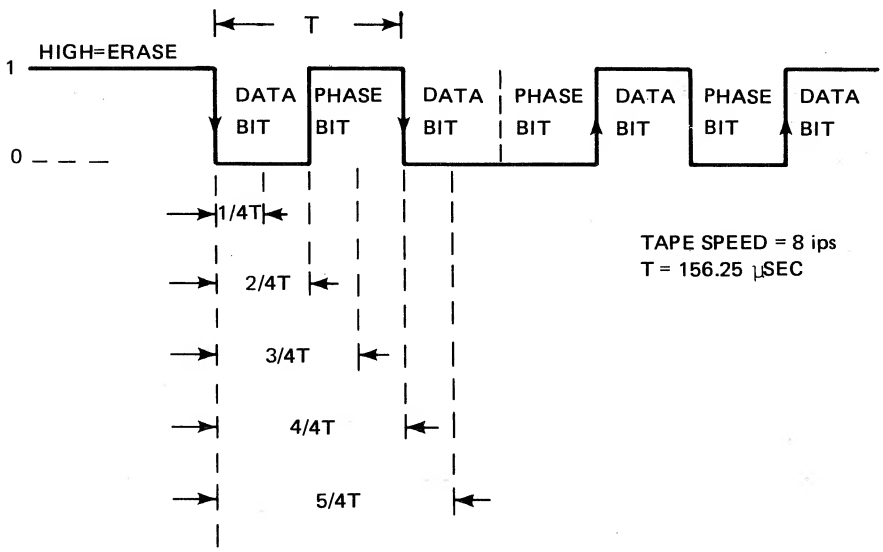

FIGURE 3-8.11. PHASE-ENCODED (PE) DATA TIMING DIAGRAM

the error to be inhibited, and the error block will be transmitted and reading will be continued in the mode used before the error was detected. At the end of the error block, the error flipflop will be cleared.

The reader control causes data to be transmitted to the serial data bus upon command (continuous read, one block at a time, or one character at a time). The tape read controller takes the data off the tape and puts it in the read buffer memory. The reader controller takes the data from the buffer memory and sends it to the serial data bus. The sequence of events for sending one character to the serial data bus from reader memory is as follows:

a. Send a reader request (RDRREQ) to terminal control.

b. Wait for a reader enable (RDRENA) and eight system clocks (SCLK) to take the data from the memory.

Data is removed from memory until the reader controller detects a ONE in the 8th bit of a carriage return (or ETX) character or until 86 characters are sent to the serial data bus.

NOTE

In binary format operation, data is removed from memory until 86 characters are sent to the serial data bus.

Depending on the reader controller mode, the controller will either stop at that point or cause the tape read controller to read the next block from tape.

3-8.2.2 Tape Read Controller. The tape read controller does the task of reading a block of data from the magnetic tape and storing in the reader buffer memory (see the flow chart and timing diagram in Figures 3-8.8 and 3-8.9). A block of data is shown in Figure 3-8.10. When the tape read controller detects that the buffer is not full (BUFFULQ=ZERO), it causes the tape transport to start and it searches the tape for the block preamble. Once the controller senses the first flux change of the phase-encoded (PE) data, a timer starts which produces a clock at exactly 1/4T (see figure 3-8.11 for PE data timing). If the first bit has remained good for at least 1/4T (time), a flipflop is set which inhibits the read circuit from resetting until the whole block is read. After the first preamble bit is sensed as good (true data), the next 7 bits of the preamble then must be detected. After the eighth bit of the preamble is detected, the reader buffer memory is enabled and data is entered into the buffer memory in the following order:

a. Last bit of preamble

b. All data bits up to eighty-six 8-bit characters

c. Zeros to fill the buffer up to 86 characters, if 86 data characters were not written

d. Two 8-bit null characters (00000000)

e. Seven bits of the postamble (the eighth bit is not put in memory).

The data on the tape is recorded in a phase-encoded (PE) format. The tape read controller therefore must convert the PE data to digital data for storage in the reader memory. PE data is self-clocking; therefore, no data clock is necessary to read the data from the tape (Figure 3-8.11 shows the PE data timing). On a data transition a timer is started which clocks the data bit into memory at exactly 1/4T. The tape read circuit is then "locked out" until the phase bit transition passes at 1/2T. The timer then produces a clock at 3/4T which resets the tape read circuit to sense the next data transition. If no new data transition occurs by 5/4T, a bit dropout is signalled and the error flipflop is set.

At this point the reader buffer memory is filled with zeros instead of data, and the tape read circuit continues reading data until it detects a gap. If no bit dropouts are detected (5/4T clock), the timer is reset at each new data transition and the data is clocked into memory at each 1/4T. After all data is clocked into memory (through the first 7 bits of the postamble), the tape read controller then seeks the interrecord gap between blocks. When the controller has detected no data for more than five bit times (21/4T), the tape read controller signals that the tape is in an interrecord gap and stops the transport. It also sets the buffer-full (BUFFULQ) flipflop to start the reader controller.

3-8.2.3 Playback Buffer Memory. The playback (reader) buffer memory, located on the Playback Control PC card, consists of three 256 x 1 random access memories and associated address counters and character counters. The memory is capable of holding 768 bits or ninety-six 8-bit characters. The memories are addressed by two 4-bit counters, giving eight address lines to each memory, and three flipflops which provide a chip select line to each memory.

A character counter is provided to the tape read controller to count the number of characters put into the memory. The same character counter is used by the reader controller to count the number of characters taken out of memory. Data is put into memory 1 bit at a time, 8 bits per character, 32 characters per memory. When the tape read is placing characters into memory, the playback buffer memory address is set to ZERO, and the character counter is set to 166. Each time a data bit is written into memory,

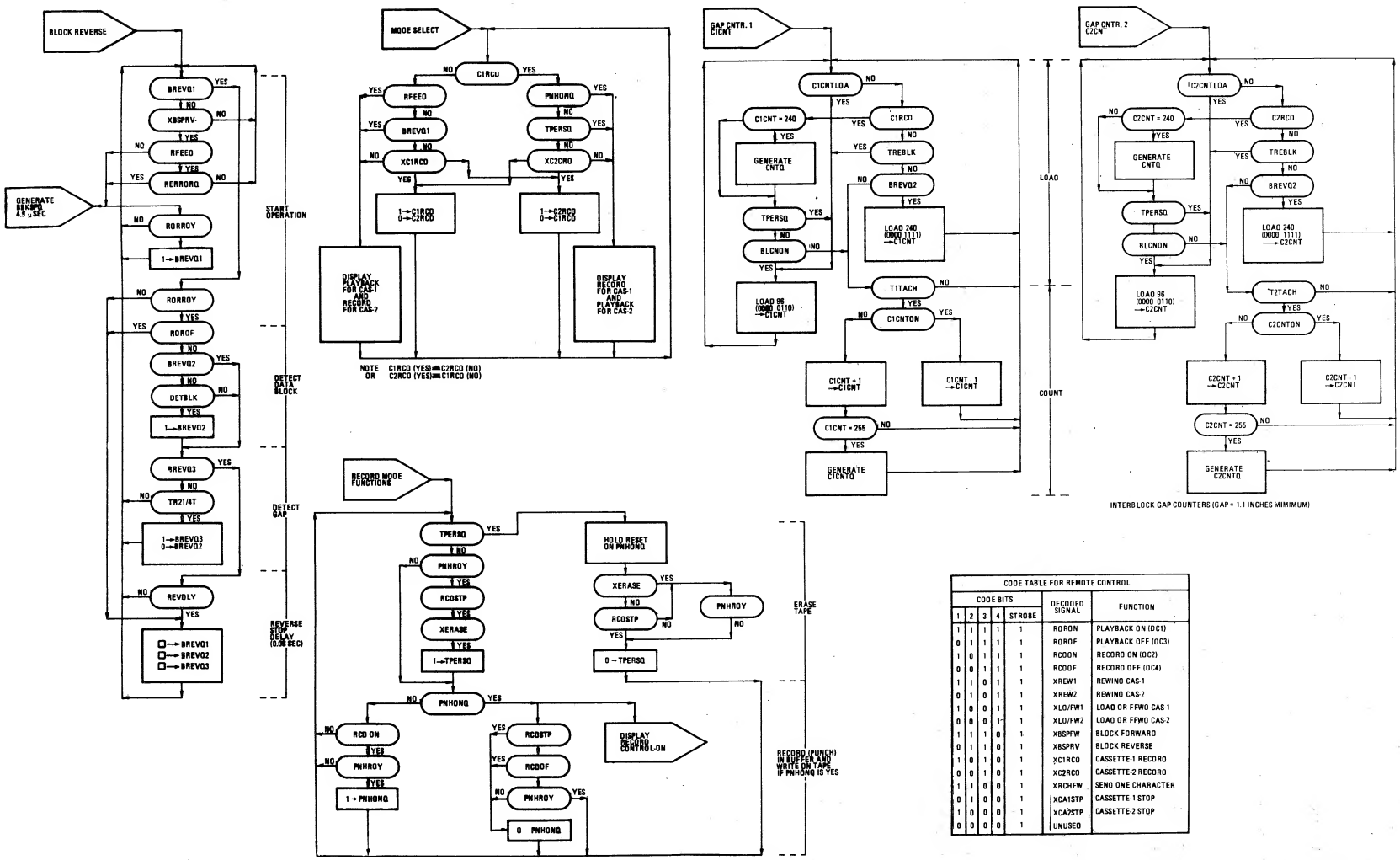

CODE TABLE FOR REMOTE CONTROL

CODE BITS					DECODED SIGNAL	FUNCTION
1	2	3	4	STROBE		
1	1	1	1	1	RORON	PLAYBACK ON (DC1)
0	1	1	1	1	ROROF	PLAYBACK OFF (DC3)
1	0	1	1	1	RCOON	RECORD ON (DC2)
0	0	1	1	1	RCOOF	RECORD OFF (DC4)
1	1	0	1	1	XREW1	REWIND CAS-1
0	1	0	1	1	XREW2	REWIND CAS-2
1	0	0	1	1	XLO/FW1	LOAD OR FFWD CAS-1
0	0	0	1	1	XLO/FW2	LOAD OR FFWD CAS-2
1	1	1	0	1	XBSPFW	BLOCK FORWARD
0	1	1	0	1	XBSPRV	BLOCK REVERSE
1	0	1	0	1	XC1RCO	CASSETTE-1 RECORD
0	0	1	0	1	XC2RCO	CASSETTE-2 RECORD
1	1	0	0	1	XRCHFW	SEND ONE CHARACTER
0	1	0	0	1	XCA1STP	CASSETTE-1 STOP
1	0	0	0	1	XCA2STP	CASSETTE-2 STOP
0	0	0	0	1	UNUSED	

FIGURE 3-8.12. FLOW DIAGRAM OF FUNCTIONS PERFORMED BY THE REMOTE CASSETTE CONTROL PC CARD

the address counter is incremented by one, and each time an eighth bit is received to be written into memory, the character counter is incremented by one until it overflows, after counting 90 characters. The characters are the preamble (only the last bit actually written in memory), 86 data characters, 2 null characters, and the postamble (only the first 7 bits actually written in memory).

When the reader controller is taking characters out of memory, the playback buffer memory address is set to one, and the character counter is set to 170. The memory address is set to one to skip the last bit of the preamble when the reader starts sending data to the serial data bus from the memory. Each time a data bit is taken out of memory and sent to the serial data bus, the memory address is incremented by one. Each time an eighth bit is taken out of memory and put on the data bus, the character counter is incremented by one. The reader controller continues to take data out of memory until a one is seen in the eighth bit of an 8-bit character, or the character counter overflows after counting 86 characters.

NOTE

If the Dual-Format Playback Control PC card (TI Part No. 969453* or 981319) is set for standard format [TERLINE– switch (S1-1) is open and the BINFMT– switch (S1-2) is closed, or R5 is installed between J5 and J6], the reader controller will continue to take data out of memory until a ONE is seen in the 8th bit, or the character counter overflows after counting 86 characters. If the terminal ON-LINE/OFF switch is in ON-LINE position and the Dual-Format Playback Control is set for binary format [TERLINE– switch (S1-1) is closed and the BINFMT– switch (S1-2) is open, or R5 is installed between J3 and J4], the reader controller will continue to take data out of memory until the character counter overflows after counting 86 characters.

Either condition signifies the end of a block, and the tape read controller must then put a new block of data into the memory for the reader controller to send to the serial data bus.

3-8.2.4 Block Backspace Controller. The block backspace controller, located on the Remote Cassette Control PC card, causes the tape to back up one block (see Figure 3-8.12). When a block reverse command is received by the block backspace controller, the tape transport moves the tape in reverse. The tape read circuit reads the tape, and the block backspace controller counts the number of data bits read in the reverse direction. When the backspace controller counts 16 data bits without a bit dropout (TR 5/4T signals a dropout), it assumes that it is in the middle of a block of data and starts to search for the next interrecord gap. When no data is detected for a period equal to 21/4T (T=156.25μsec), the controller assumes that it is in the interrecord gap and should stop the tape. However, the transport's minimum stop time is only 0.2 inches (1 inch = 132.415 tachs) of tape, while the maximum start time is 0.5 inches. Therefore, a delay timer is started when the gap is detected, delaying stopping the transport for approximately 64 tach pulses. These 64 tach pulses, plus the minimum stop distance of the transports, allows enough distance so that when the transport is started again to read the next block, it will be up to speed before it is out of the gap and into the data. The delay timer does not actually count tach pulses to get a 64 tach pulse delay, but instead counts the reference clock (TRFCLKB) used by the transport for the phase lock loop which controls motor speed. When the motor is running at full speed, the phase lock loop ensures that a tach pulse occurs at each reference clock (TRFCLKB) with long-term speed variation of no more than 1 percent. Since the motor is running at full speed during the block reverse, the proper condition exists such that 64 reference clocks (TRFCLKB) should approximately equal 64 tach pulses; therefore, the transport may be stopped after the timer has counted 64 reference clocks into the gap.

3-8.3 MOTION CONTROL. The Motion Control PC card controls rewind, load, and fast forward operations of both cassettes: generates write, forward, reverse, and fast commands: and controls the ready signals for the playback and record. Each of these functions is explained in the following paragraphs. A flow chart of the motion control function is shown in Figure 3-8.13.

3-8.3.1 Rewind: to rewind tape: (1) the cassette door must be closed, (2) the tape must not be on the left end, (3) the cassette tape must not be moving (either forward or reverse), and (4) the cassette transport must not be "BUSY" (reading or recording). When these three conditions are met and the REWIND switch is actuated, the rewind latch will be set (C1RWQ).

This generates reverse and fast commands for the transport until either the STOP switch is actuated (STPCA1), or the left end of the tape is reached (T1LEQ).

3-8.3.2 Load: To load tape: (1) the cassette door must be closed, (2) the write tab must be in place if the transport is in the RECORD mode, (3) the tape must not be at the right end or moving, and (4) the cassette must not be "busy". Then if the LOAD/FF (fast forward) switch is actuated while the tape is on the clear leader (BOE0CA1), the load flipflop is set (LOAD1Q). LOAD1Q generates the

* This PC card is obsolete.

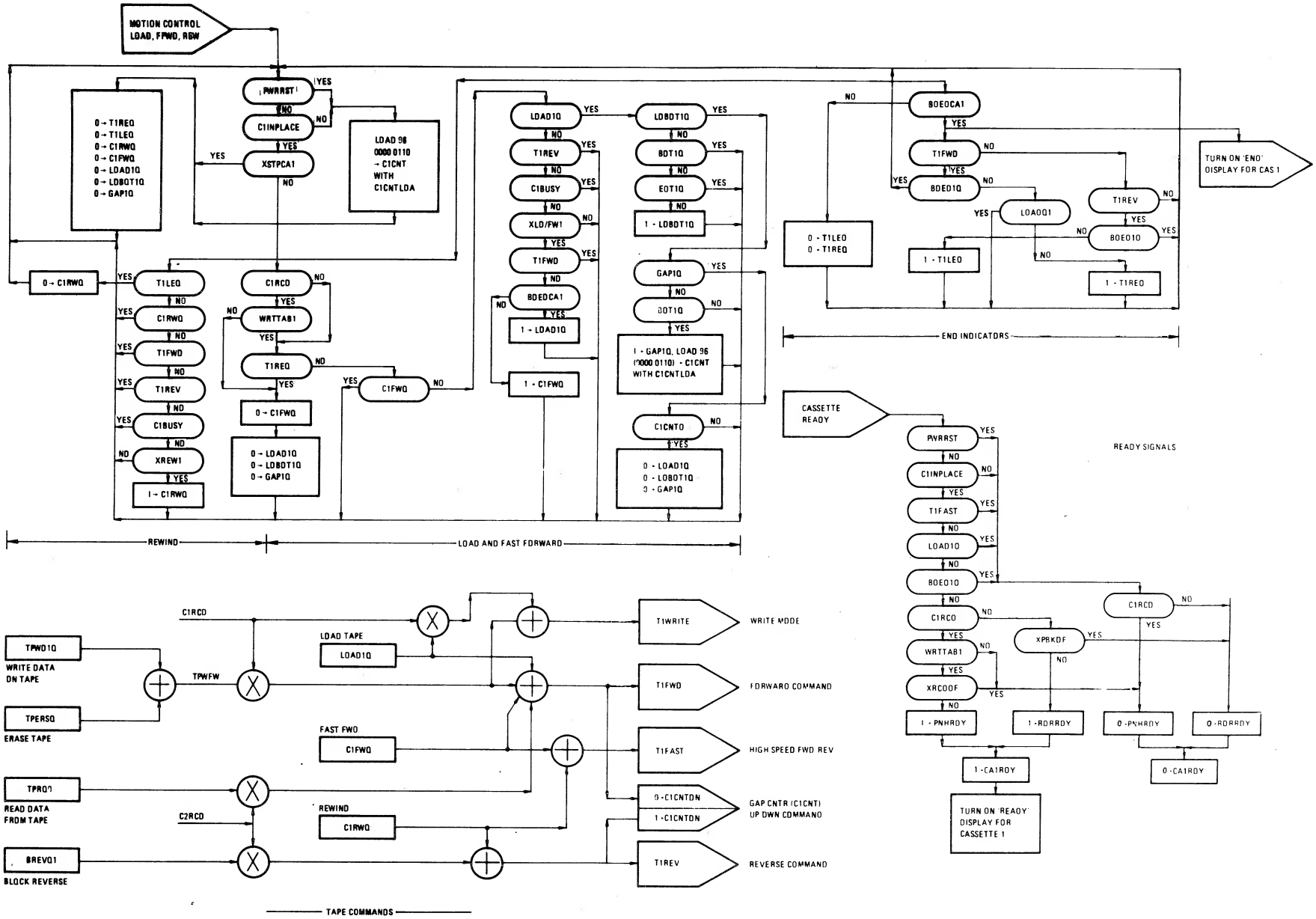

FIGURE 3-8.13. TAPE CASSETTE MOTION CONTROL FLOW DIAGRAM

tape-forward command for the transport, and if the transport is in the record mode, it generates the write command. When the tape reaches the end of clear leader, the BOT flipflop is set (LDB0T1Q). The load controller then waits for BOT to come up (BOT perforation in the tape). When BOT is sensed the gap flipflop is set (GAP1Q), and the gap counter is loaded. The GAP is then written, and the load, BOT and gap flipflops are reset.

3-8.3.3 Fast Forward: To perform fast forward operations the same initial conditions must be met as for load operations, except the tape cannot be on clear leader. When these conditions are met, the forward flipflop is set (C1FWQ). This generates the forward and fast commands for the transport until the right end (T1REQ) is reached or the STOP switch is activated (XSTPCA1).

3-8.3.4 Write. The write command (T1WRITE) is generated when the transport is in the record mode (C1RCD) and either the load (LOAD1Q), tape write (TPW01Q), or tape erase (TPERSQ) flipflops are set.

3-8.3.5 Forward: The forward command (T1FWD) is generated when the write command (T1WRITE) is generated, or fast forward flipflop is set (C1FWQ), or when the cassette is in playback mode and the read flipflop is set (TPRQ0).

3-8.3.6 Reverse: The reverse command (T1REV) is given when the rewind flipflop is set (C1RWQ) or when the cassette is in the playback mode and the block reverse flipflop is set (BREVQ1).

3-8.3.7 Fast: The fast command is generated when either the fast forward (C1FWQ) or rewind (C1RWQ) flipflops are set.

3-8.3.8 Ready: The ready signal is generated if the cassette

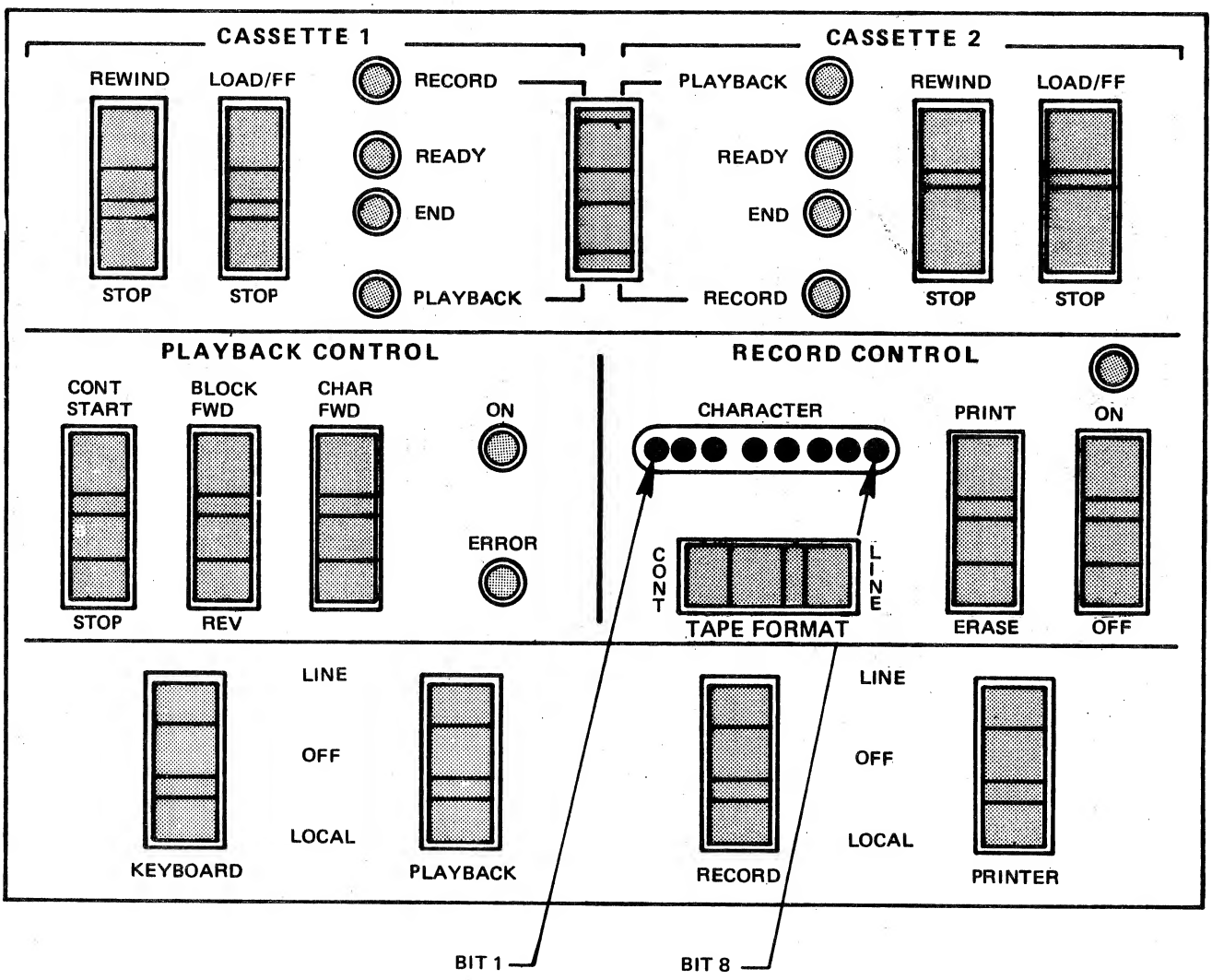

FIGURE 3-8.14. ASR CONTROL AND DISPLAY PANEL

is in place, is not performing fast or load operation, and is not on clear leader. If the above conditions are met and the cassette is in the record mode with a write tab, the READY lamp will illuminate and the recorder ready signal will be generated (PNHRDY) if the record control is not OFF. If the cassette is in the playback mode, the READY lamp will illuminate and the playback ready signal will be generated (RDRRDY) if the playback control is not OFF. If the RECORD or PLAYBACK switches are in the LINE position, the data terminal must also be on-line, or the ready signal will not be generated.

The left end flipflop is set (T1LEQ) when the tape is reversing and the end is sensed. The right end flipflop is set (T1REQ) when the tape is moving forward, not during a load, and the end is sensed.

3-8.4 DISPLAY FUNCTIONS. The Display PC card consists of the switches and indicators necessary to control the tape cassettes. The indicators are light-emitting diodes driven by open collector TTL gates. The momentary switches on this PC card have debounce circuits consisting of inverter latches. A status register included on this circuit sends information (RFEED, RERROR, BOEOCA1, BOEOCA2, KBDLOC, PRNLOC, PRNOFF) to terminal control in serial form, using status enable (STAENA) and eight clocks (SCLK). The upper display and control panel is shown in Figure 3-8.14.

3-8.5 CASSETTE TRANSPORT. All motion control, read/write, and status-sensing electronics are contained on a single PC card mounted on the rear of the transport (see schematic 960082*, 986357*, or 981337 in Appendix C). A block diagram of the read/write electronics is shown in Figure 3-8.15. Since the head has a single read/write gap, reading and writing cannot occur simultaneously. When writing occurs, the write data appears at the read data outputs.

3-8.5.1 Tape Write Circuit. Writing is inhibited when a write tab is not sensed by the write tab switch. When a write tab

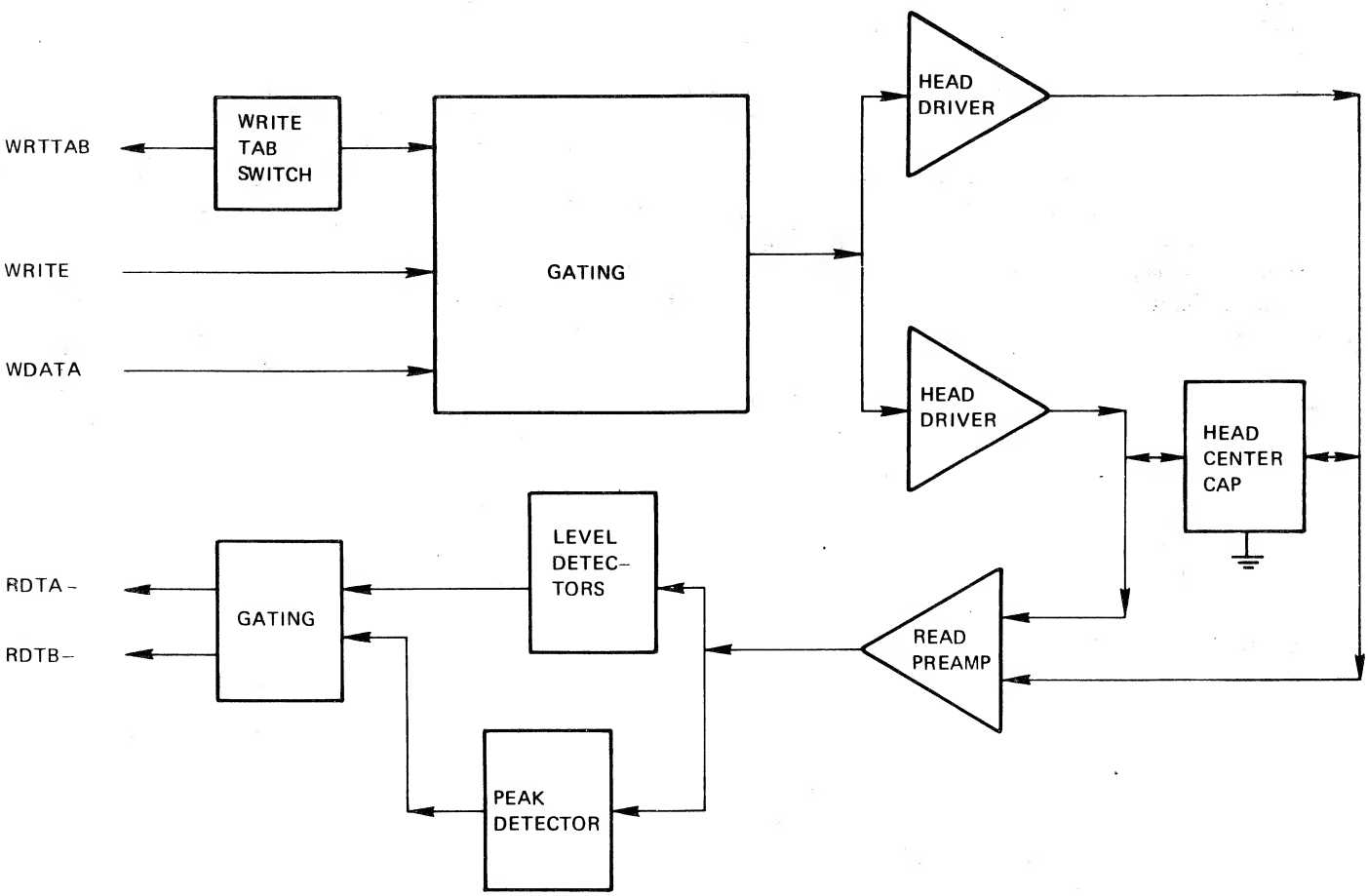

FIGURE 3-8.15. READ/WRITE ELECTRONICS BLOCK DIAGRAM

* This PC card is obsolete.

is present on the cassette and a write command is present on WRITE–, the digital data on WDATA is gated to the head drivers. Each head driver is a current source which forces sufficient current through half of the head coil to saturate the tape.

3-8.5.2 Tape Read Circuit. During a read cycle, the flux reversals on the tape moving past the head cause generation of a voltage across the head coil. This signal is amplified by the read preamp to a level sufficient for use by the peak and level detectors. The level detectors provide noise immunity by allowing only signal peaks above a certain level to reach the output pins. The peak detector detects the point where the head voltage changes direction, which is also the point where the flux of the tape changes direction, and an output data transition occurs. A data transition may occur on RDTA– or RTDB– depending on the direction of the flux change, but the information is contained in the transitions rather than the levels.

3-8.5.3 EOT and BOT Sensors. Optical sensors are used to sense the clear leader at each end of the tape as well as the EOT and BOT perforations in the tape. Light sources (small lamps located in the guide posts directly under the center of the tape guides) are sensed by photo-transistors mounted over holes in the center of the tape guides. The photo-transistor signals are buffered by operational amplifiers and converted to TTL-compatible levels at the card interface.

3-8.5.4 Switches. When actuated, three miniature sensor switches on the tape transport sense that the tape cassette is installed correctly, that the cassette door is closed, and that a write tab is on the cassette. Both the cassette-in-place and door switches must be actuated before the transport will move the tape.

3-8.5.5 Tachometer. The appropriate tachometer signal is available at the card interface for use in keeping up with record locations. The forward tachometer signal is enabled when a forward command (FWD–) is present, and the reverse tachometer signal is enabled when a reverse command (REV–) is present. One tachometer cycle occurs each time 0.0075 inch of tape passes a capstan.

3-8.5.6 Motion Control and Deck Status Electronics. A block diagram of the motion control and deck status electronics is shown in Figure 3-8.16. Tape moved fast in either the forward or reverse direction is controlled by the reel motors. The solenoids are disengaged so the tape does not touch the capstans or the pinch rollers. During read/write operations, the forward or reverse solenoid is engaged, forcing that pinch roller into contact with the tape and capstan. The capstan motor controls the tape motion in this case, while the reel motors supply only enough torque to keep the tape in tension. The circuits to move tape forward or reverse are identical except that the functions of the forward and reverse components are interchanged.

3-8.5.7 Capstan Control Circuit. The capstan motors are controlled by a phase-locked loop. When a forward command is applied to the transport, the forward solenoid is immediately energized. The forward reel motor torque is increased to provide takeup tension, the forward tachometer signal is gated into the loop, and a 10- to 25-millisecond delay is initiated to allow the pinch roller to engage the tape and capstan. At the end of this delay, the capstan motor driver and the integrator are enabled, completing the servo loop. The initial conditions imposed on the integrator result in an initial motor voltage of approximately 3 volts. As the speed of the tape and capstan motor increases, the frequency of the pulse train from the forward tachometer increases, and the error pulses out of the phase comparator become shorter. When the frequency of the tachometer pulses become higher than the reference frequency, the phase comparator puts out a different pulse train, and the motor voltage is decreased. The steady-state condition is reached when the motor is making small positive and negative excursions from nominal speed. Timing for a typical operation is diagrammed in Figure 3-8.17.

3-8.5.8 Reel Motor Control Circuit (TI Part No. 960331). The reel motors perform three distinct functions, requiring three different amounts of torque. During all operations one reel motor applies a low hold-back torque to the supply tape spool, and both reel motors apply this torque when the transport is idle. During read/write operations additional current is supplied to the reel motor, driving the takeup tape spool so that it applies additional takeup torque. During fast forward and rewind operations 12 volts are applied to the takeup reel motor, resulting in the high torque required to move the tape at an average 60 inches per second (ips). Timing for a typical fast sequence is diagrammed in Figure 3-8.18.

The TI Part No. 986353 transport reel motor control circuit is the same except that the holdback torque is reduced and the takeup torque is decreased during read/write operations.

3-9 OPTIONAL DEVICES.

Several optional functions are available for the 732/733 models as plug-in PC cards, including line interface drives, an answer-back memory, and an auto device controller. The theory of operation of this equipment is explained in this section.

3-9.1 LINE INTERFACE. The standard terminal interface meets requirements of EIA standard RS232C. The terminal

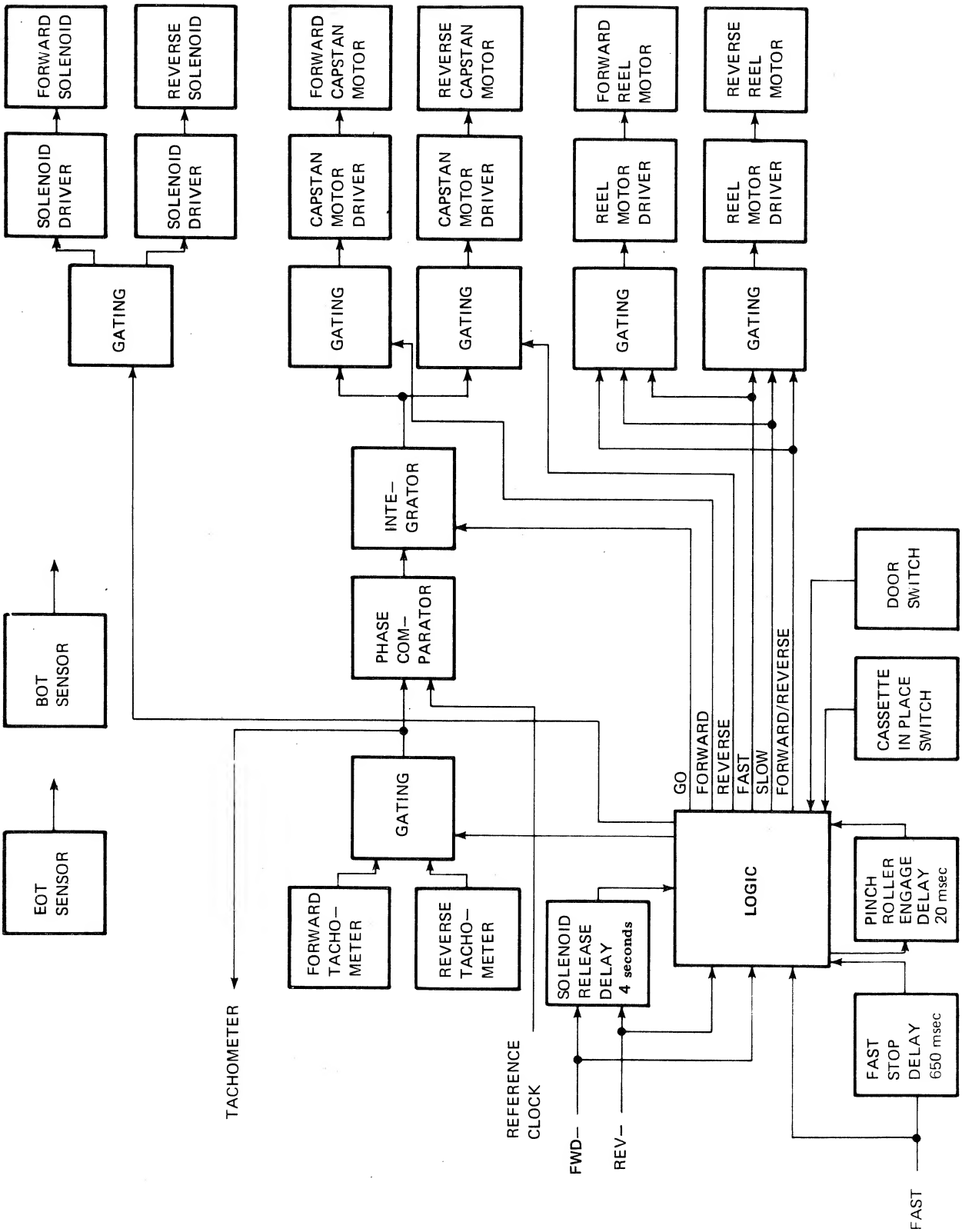

FIGURE 3-8.16. MOTION CONTROL AND DECK STATUS BLOCK DIAGRAM

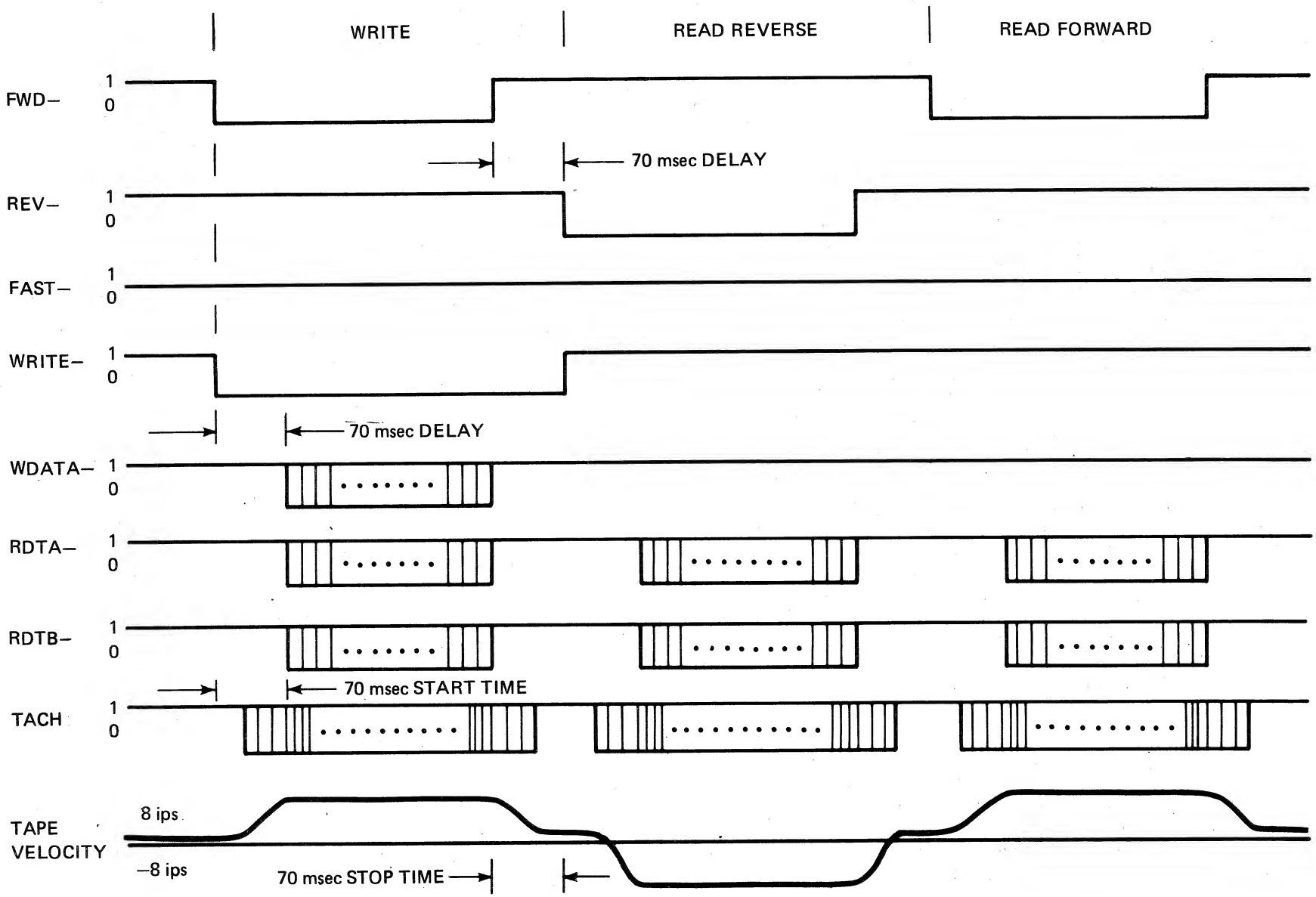

FIGURE 3-8.17. TIMING FOR A TYPICAL WRITE/READ–REVERSE–FORWARD SEQUENCE

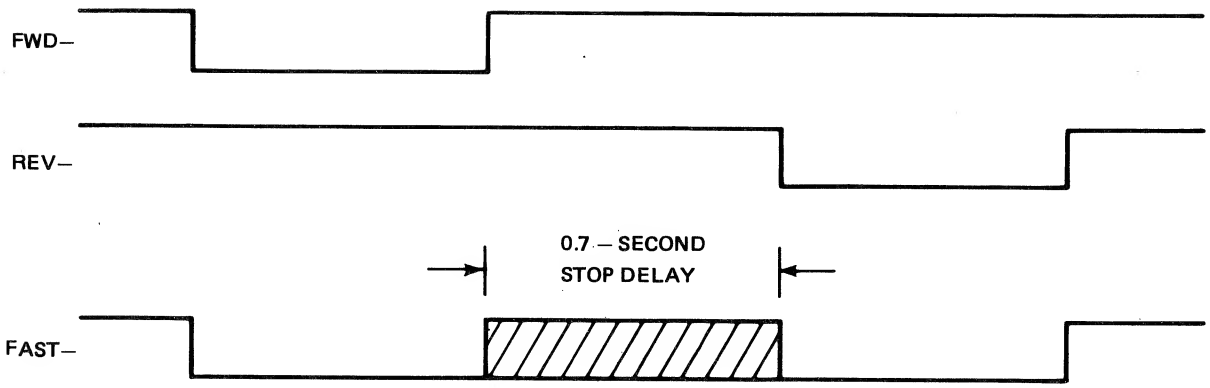

FIGURE 3-8.18. TIMING FOR A TYPICAL FAST-FORWARD/FAST-REVERSE SEQUENCE

can receive without error, signals with mark and space distortion of up to 45 percent. The minimum stop bit time for error free reception at any speed is 0.6 nominal bit time. Four optional line interfaces are available:

a. TTY current loop - neutral

b. TTY current loop - polar

c. Modem - originate mode

d. Modem - answer mode.

3-9.1.1 Teletype Current Loop – Neutral. The Teletype Current Loop PC card (card slot A8) is divided into two functional sections, receiver and transmitter, described below. A schematic (959192) of this PC card is contained in Appendix C.

a. Receiver: The teletype (TTY) neutral receiver consists of the necessary circuitry to sense current from an outside source and convert the current levels to appropriate TTL-logic levels. The voltage drop across the receiver inputs (TTYL1 and TTYL2) under working (current flow) conditions should be less than or equal to 5 volts. The MARK/SPACE nominal threshold decision current at 20mA operation (R34 deleted) should be 10mA (±26%) and at 60mA operation (R 34 installed), should be 30mA (±20%).

The receiver utilizes a differential transistor pair to sense the 10mA or 30mA current level. Upon sensing the decision level the transistor pair switches the current load from one to the other. When the second transistor of the pair starts sinking current through its collector, a voltage sufficient to switch on the optic coupler (Q17) is produced across R31. When the optic coupler transistor turns on, Q11 turns on and switches the appropriate TTL gates to give a TTL-logic level output (logic ONE) corresponding to a mark on the input receiver. Likewise, when the current is below the decision level on the receiver input line, the differential pair switches back to normal, the optic coupler turns off, and the logic level goes back to that (logic ZERO) for a spacing condition on the input receiver line (TTYL1

and TTYL2). Diode CR10 is provided to protect the receiver circuit from line transients.

b. Transmitter: The TTY neutral transmitter consists of the necessary circuitry to sense a TTL-logic level and then, as appropriate, open or close the circuit presented to the transmitter output lines (TTYL3 and TTYL4). When closing the circuit presented to the transmitter output lines (marking), the voltage drop across the lines should be less than 5 volts under nominal current conditions (20mA or 60mA). The circuit utilizes a diode bridge so that the output lines may be connected with either side positive. Under normal circuit conditions the input data (TTYDATOT) is a logic ONE. This input condition causes optical coupler transistors Q13 to be on and Q14 to be off. Since Q14 is off, the amplifier action of Q2, Q4, and Q3 provides sufficient drive to turn on output transistor Q5 which acts as a switch for closing (shorting) the equivalent sending contacts to the outside lines (TTYL3 and TTYL4). Even if power to the terminal is off, the equivalent contacts should remain closed (marking). This is accomplished by diode CR1 and resistors R6 and R7. These three components, using the power provided by the outside line, keep Q1 turned on. Since Q14 is still off when power to the terminal is off, the same conditions apply as when a logic ONE is present at the transmitter input, pin 30 (TTYDATOT), and Q5 remains on, producing a marking condition at the output lines (TTYL3 and TTYL4). To send a spacing condition Q5 must be turned off. This is accomplished by putting a logic ZERO at the transmitter input (pin 30). A logic ZERO input causes Q13 to turn off and Q14 to turn on. With A14 on, the current provided by Q1 is diverted around the amplifier transistors Q2, Q4, and Q3, and drive to Q5 is insufficient to turn it on. Since Q5 is off the equivalent sending contacts to the outside line (TTYL3 and TTYL4) are open, and a spacing condition exists. CR3 and CR4 are used to protect the transmitter circuit from line transients.

3-9.1.2 Teletype Current Loop – Polar. A schematic (959191) of the TTY polar current loop is contained in Appendix C.

a. Receiver: The TTY polar receiver consists of the necessary circuitry to sense the current from an outside source and convert the current levels to appropriate TTL-logic levels. The voltage drop across the receiver inputs (TTYL1 and TTYL2) under 20mA or 60mA operation should be less than or equal to 5 volts. The marking-spacing nominal threshold decision current is 0 (±5) mA.

The receiver circuit utilizes a diode CR10 for protection and an optical coupler to sense the current direction and convert it to TTL-logic levels. When positive current flows from TTYL1 to TTYL2, optical coupler transistor Q17 turns on. When Q17 is on, Q11 is on and a logic ONE is output from the receiver, pin 29 (TTYPATIN). If negative current flows from TTYL1 to TTYL2, optical coupler transistor Q17 turns off, turning off Q11, causing a logic ZERO at the receiver output, pin 29.

b. Transmitter: The TTY polar transmitter consists of the necessary circuitry to sense a TTL-logic level and then, as appropriate, open one set of equivalent contacts and close one set of equivalent contacts to the outside transmitter lines (TTYL3 and TTYL2 or TTYL4 and TTYL2). When closing the circuit presented to the transmitter output lines (marking), the voltage drop across the lines should not exceed 5 volts under nominal current conditions (20mA or 60mA). Operation consists of two identical circuits which complement each other so that equivalent contacts between transmitter output lines TTYL3 and TTYL2 and TTYL4 and TTYL2 are always in opposite states; i.e., when one set is open, the other set is closed and vice versa. Each transmitter output utilizes a diode bridge arrangement, so that polarity of outside sources is immaterial. When the input data (pin 30) is a logic ONE, optical coupler transistors Q13 and Q16 are on, and optical coupler transistors Q14 and Q15 are off. Since Q13 is on and Q14 is off, current supplied by Q1 is amplified by Q2, Q4, and Q3; therefore, sufficient drive is available to turn on Q5 and close the equivalent contacts between TTYL3 and TTYL2. Conversely, in the other driver circuit Q15 is off and Q16 is on; therefore, no current is supplied to transistor amplifier Q7, Q8, and Q9, keeping Q10 off and the equivalent contacts between TTYL4 and TTYL2 open. If power to the terminal is off, the same situation exists.

Since Q15 is still off, no current is supplied to the transistor amplifier Q7, Q8, and Q9; thus, Q10 is still off and the equivalent contact between TTYL4 and TTYL2 is still open. Conversely, due to diode CR1 and resistors R6 and R7, the outside power supplied by the line maintains Q1 on; and since Q14 is off, the transistor amplifier Q2, Q4, and Q3 apply sufficient drive to turn on Q5 and keep closed the equivalent contacts between TTYL3 and TTYL2. This maintains a "working" condition on the line, even when power to the terminal is off. When the input data to the transmitter (pin 30) changes to a logic ZERO, the optical coupler transistors change (Q14 and Q15 on; Q13 and Q16 off); the transistor amplifier for TTYL3 (Q2, Q4, Q3) turns off; the transistor amplifier for TTYL4 (Q7, Q8, Q9) turns on; and transistor outputs Q5 and Q10 switch the equivalent contacts to the outside line, putting TTYL3 to TTYL2 open and TTYL4 to TTYL2 closed. Diodes CR3, CR4, CR6, and CR7 are used to protect the transmitter circuits from line transients.

3-9.1.3 Teletype Current Loop – Computer. The Teletype Current Loop PC card (slot A8) is divided into two functional sections, receiver and transmitter. A schematic (966657) of this PC card is contained in Appendix C.

a. Receiver: The TTY computer receiver consists of the necessary circuitry to sense current from an outside source (typically a computer) and convert the current levels to appropriate TTL-logic levels. The voltage drop across the receiver input terminals (TTYL1 and TTYL2) under working (current flow) conditions should be 2.7 volts or less. The MARK/SPACE nominal threshold decision current for 13 mA operation should be 6.5 mA ±20 percent.

When current is flowing on the line, a voltage sufficient to switch on the optical coupler (Q17) is produced across R31. When the optical coupler transistor turns on, Q11 turns on and switches the appropriate TTL gates to produce a TTL-logic level output (logic ONE) corresponding to a MARK on the input receiver. Likewise, when the current is below the decision level, the optical coupler turns off and the logic level goes to that (logic ZERO) for a SPACE condition on the receiver line (TTL1 and TTL2). Diode CR10 is provided to protect the receiver circuit from line transients.

b. Transmitter: The TTY computer transmitter consists of the necessary circuitry to sense a TTL-logic level and then, as appropriate, open or close the circuit presented to the transmitter output lines (TTYL3 and TTYL4). When closing the circuit presented to the transmitter output lines (marking), the voltage drop across the lines should be less than 1.2 volts under nominal current conditions (13 mA).

Under normal circuit conditions the input data (TTYDATOT) is a logic ONE. This input condition causes optical coupler transistors Q13 to be on and Q14 to be off. With Q14 off, sufficient drive is provided by the current flow through Q13 to turn on Q4, which acts as a switch to close (short) the equivalent sending contacts to the outside lines (TTYL3 and TTYL4).

To send a spacing condition Q4 must be turned off. This is accomplished by putting a logic ZERO at the transmitter input (pin 30). A logic ZERO input causes Q13 to turn off and Q14 to turn on. With Q14 on, drive is insufficient to turn Q4 on. Since Q4 is off, the equivalent sending contacts to the outside line (TTYL3 and TTYL4) are open and a spacing condition exists.

3-9.1.4. TL Modem – Originate Mode. The TL Modem is an originate-mode PC card modem, designed to communicate with the comparable answer-mode (TH) modem. The transmitter section of the TL Modem converts a MARK level (EIADATOT low) from the serial transmitter into a MARK (1270 Hz) frequency on the transmission line and converts a SPACE level (EIADATOT high) into a SPACE (1070 Hz) frequency on the transmission line. The TL modem receiver section converts a received MARK (2225 Hz) frequency on the transmission line into a MARK level (EIADATIN low) for the serial receiver and converts a received SPACE (2025 Hz) frequency on the transmission line into a SPACE level (EIADATIN high) for the serial receiver. Modulation and demodulation processes may be carried out for data rates up to 300 baud. A block diagram of the TL modem is shown in Figure 3-9.1.

a. Reference Regulator Circuit: The reference regulator circuit provides high frequency filtering for the +12Vdc and -12Vdc terminal power supply bus connections to the TL Modem PC card. The circuit's other function is to develop stable, low impedance, reference voltage sources for the other circuits on the PC

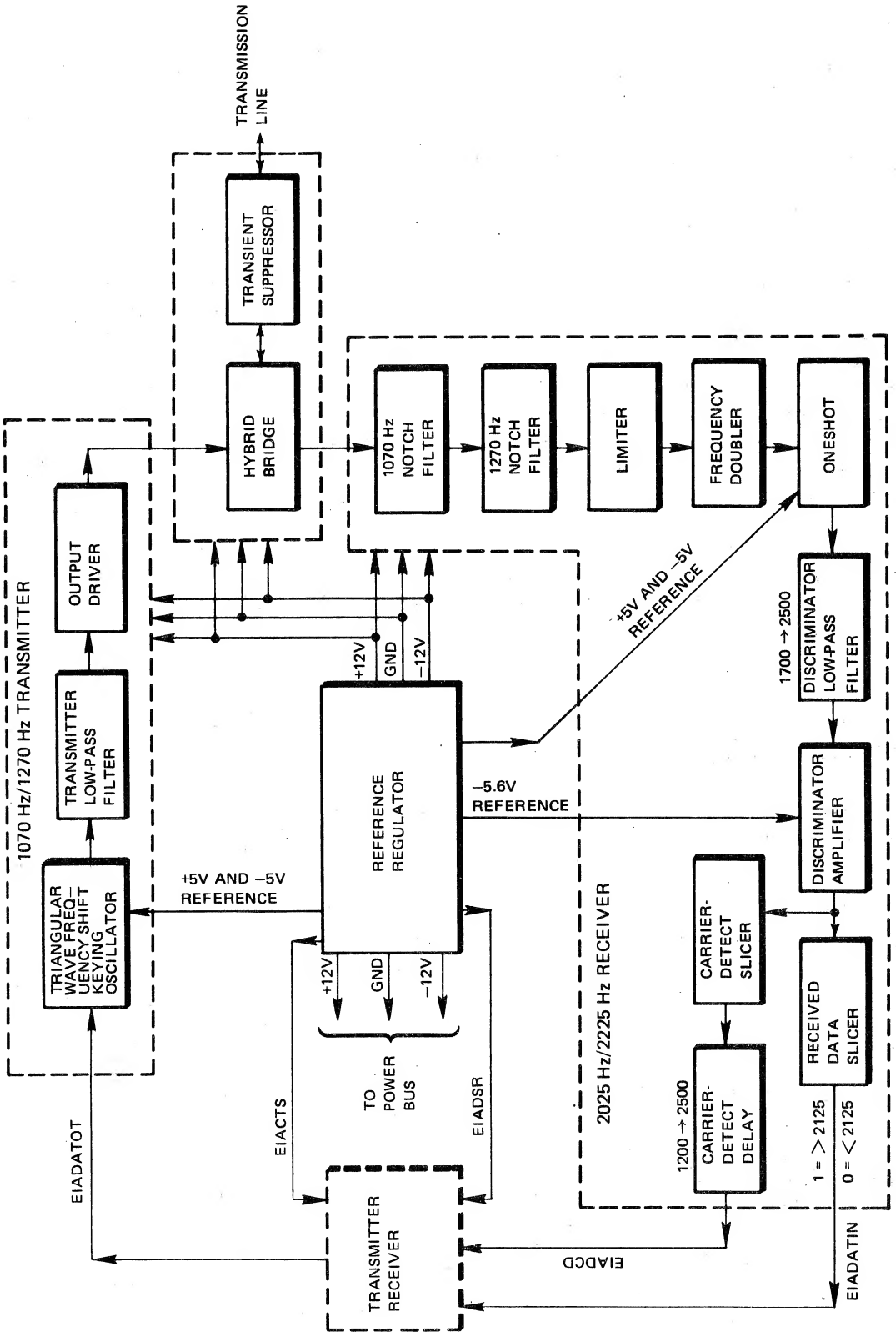

FIGURE 3-9.1. ORIGINATE-MODE (TL) MODEM FUNCTIONAL BLOCK DIAGRAM

card. The circuit includes two complementary emitter followers (Q6, Q7), whose output voltages track the voltage developed across the matched pair of zener diodes CR4/CR5. The anode of CR5 also provides -5.6 volts for use in the receiver discriminator amplifier circuit as a bias reference to track the +5V and -5V reference voltages. Data-set-ready and clear-to-send are held high through R38 and R29 whenever power is applied to the terminal.

b. Transmitter Triangular Wave Oscillator: The transmitter triangular wave oscillator is the source of 1070 Hz (SPACE) and 1270 Hz (MARK) transmitted frequencies. The oscillator frequency is controlled by the EIADATOT signal from the transmit/receive PC card. The output of AR1 is fed back to the noninverting input of AR1 through R3, and the output of AR1 is driven into positive or negative saturation. For purposes of explanation, assume that AR1 is initially driven into negative saturation. CR1 is back-biased and CR2 is forward-biased, clamping the voltage at the cathode of CR2 to -5.6 Vdc. The constant negative voltage at the input to the voltage divider network (consisting of R6 through R9) causes the output of the inverting integrator circuit (AR3, R10, C8) to ramp upward linearly with time. The rate at which the ramp rises is determined by the current flowing into the summing node (inverting input) of AR3. The output voltage of AR3 continues to rise to about +3.73 Vdc, at which time the voltage at the noninverting input of AR1 becomes slightly positive because of the R2/R3 voltage divider between the output of AR3 and the cathode of CR2. The positive voltage at the noninverting input of AR1 causes AR1 to go into positive saturation, back-biasing CR2 and forward-biasing CR1 to clamp the voltage at the anode of CR1 to +5.6 Vdc. The constant positive voltage at the input to the voltage divider (R6 through R9) causes the output of AR3 to ramp downward from +3.73 Vdc toward -3.73 Vdc. When the voltage at the output of AR3 reaches -3.73 Vdc, the noninverting input of AR1 is forced negative, and AR1 rapidly reverses states, going into negative saturation again. This action completes a single cycle of the oscillator.

In order to change the frequency of the oscillator waveform, the magnitude of the input current supplied to the integrator is changed by switching the shunt leg of the attenuator (R8, R9) to ground. When the EIADATOT line is high. Q4 is turned off, and Q5 is held pinched off by -12 Vdc through R31. This action opens the R8/R9 leg of the attenuator, allowing all the current available at the cathode of CR2 to flow to or from the integrator input summing junction (AR3-2). The maximum amount of the current, and hence the maximum slope of the integrator output ramp, is determined by adjusting R7. Since the higher the slope, the shorter the time per oscillator cycle, the higher transmitter (MARK) frequency (1270 Hz) is set by adjusting R7 with the EIADATOT line held high. The lower (SPACE) transmitter frequency (1070 Hz) is produced when Q5 is no longer pinched off by the action of Q4. Since the on-resistance of Q5 is only about 20 ohms, the shunt leg (R8, R9) of the attenuator is essentially switched into the circuit, reducing the current flowing through R10 to or from the integrator summing junction input (AR3-2). The magnitude of the current flowing in the shunt leg of the attenuator is adjusted by means of the pot R9 while the transmitted-data line is held low. It is important to note that the adjustments for MARK and SPACE frequencies are interactive, inasmuch as R7 controls the integrator input current whether the shunt leg of the attenuator is switched in or out of the circuit. Hence, the MARK frequency (1270 Hz) must be set by R7 before setting the SPACE frequency (1070 Hz) with R9.

c. Transmitter Low-Pass Filter: The triangular wave output from the transmitter oscillator circuit is altered to produce a low distortion sine wave at the oscillator fundamental frequency by attenuating all harmonics of the fundamental with the transmitter's low-pass filter (R11-R13, C9-C12, and AR4).

d. Transmitter Output Driver: The transmitter output driver circuit consists of variable attenuator R18 from the output of the transmitter low-pass, followed by noninverting voltage follower AR6. By adjusting the wiper position on R18, the output level transmitted

may be adjusted over the range from +5 dBm to less than -40 dBm.

e. Communication Line Transient Suppressor Circuit: The zener diodes CR7 and CR8 are 6.8-volt units rated at 5 watts. Their function is to limit the difference-mode signal amplitude at the primary (transmission line side) of transformer T1 to an absolute maximum of about 7.5 volts. Chokes L3 and L4, in conjunction with high voltage capacitors C18 and C19 and associated circuit resistances, form low-pass filter sections which limit the coupling of high frequency common mode signals (spikes, etc.) from the primary to the secondary of T1.

f. Hybrid Bridge Circuit: The hybrid bridge circuit performs three important functions. First, it provides the proper driving and terminating impedance to match the modem to the transmission line. Second, it provides isolation between the transmitter and receiver of the modem to prevent a strong transmitted signal from swamping out a small received signal. Third, the bridge components are chosen to limit the bandwidth of the modem receiver.

The bridge's operation is dependent on the balancing of the impedance in its two arms: R14/R39 and R17/R41/T1. For balancing considerations R15 may be neglected, since the very large input impedance of operational amplifier AR5 does not load it. Consider the case when the modem is transmitting into a 600-ohm transmission line termination on which no other signal is impressed. The resistors R14, R39, R17, and R41 are chosen so that the ratio of values of R14 to R39 equals the ratio of values of R17 to the series combination of R41, the line impedance (600 ohms, reflected through 1:1 transformer T1), and the equivalent winding resistance of T1. Since R39 provides negative feedback around AR5, the difference voltage between the inverting and noninverting inputs to AR5 is driven to zero. Since the difference voltage from AR5-2 to AR5-3 is zero, and the bridge resistances are proportional, the voltage across R14 equals the voltage across R17. This means that the voltage across R39 must equal the voltage from AR5-3 to ground; i.e., the output of the bridge (AR5-6) is identically zero. Therefore, the bridge provides 30 to 35 dB attenuation between the transmitter and receiver.

With the transmitter off AR6-6 will be at ground, and the input impedance to the modem appears as a series combination of R17, R41, and the resistance of the secondary winding of T1 (typically slightly over 600 ohms for the total). This combination is set to 600 ohms so as to match the transmission line impedance. The total input impedance is tapped by AR5-3 via R15 between R41 and R17; thus, about 5/6 of the input signal is present at the noninverting input to AR5. Since R14 is at signal ground with respect to receiving signals from the transmission line, the overall gain is approximately 2.0 from the communication line input to the output of AR5 (input to receiver).

The receiver input bandwidth is limited by the simple RC low-pass filter formed by R15 and C16. This filter has a cutoff (3 dB) frequency of about 4.4 kHz and a rolloff rate of -6 dB per octave.

g. 1070-Hz Notch Filter Circuit: AR7 and its associated twin-tee network provides a very narrow, band-elimination filter centered at the transmitter SPACE frequency of 1070 Hz. The function of the filter is to severely attenuate any 1070-Hz output signal from the transmitter which "leaks" through the hybrid bridge circuit to the receiver input.

h. 1270-Hz Notch Filter Circuit: AR8 and its attendant twin-tee network provide a very narrow, band-elimination filter centered at the transmitter MARK frequency of 1270 Hz. The function of the filter is to severely attenuate any 1270-Hz output signal from the transmitter which "leaks" through the hybrid bridge to the receiver input.

i. Limiter Circuit: The limiter circuit has two functions. The first function is to produce a square wave output which switches as closely as possible to the zero crossing in the input waveform. The output wave switches between +5.4 and +0.25 Vdc. The high output voltage is set by resistor divider R54/R61 to +12Vdc. The low output voltage is set by the saturation voltage of the output stage of AR9. The second

function of the limiter circuit is to determine the sensitivity of the receiver. The sensitivity of the limiter may be varied by feeding back a small portion of the output waveform to establish the threshold voltage through which the limiter input must pass in order to cause an output transition. The greater the amplitude of this positive feedback voltage, the larger the input signal must be to cause a transition at AR9-7.

C30, R51, R52, and C31 form a rudimentary bandpass filter with nominal (-3 dB) cutoff frequencies of 1040 Hz and 88.4 kHz. This filter further restricts the bandwidth to which the receiver is sensitive. Since C30 couples the limiter circuit to the preceding receiver stage, the input signal applied to the inverting input of the comparator (AR9-3) has no dc component. The band-limited input signal is therefore an ac signal twice the amplitude of the received signal on the transmission line, since the hybrid bridge provides a gain of two. The (positive) feedback signal supplied to the noninverting input AR9-2 must also be an ac signal with no dc component, but the voltage at AR9-7 never goes negative.

A pull-down network composed of R55 and R56 provide the driving potential to pull the feedback signal below ground. Pot R56 provides adjustment to compensate for variation in input offset voltage as well as tolerance variations in R54, R61, and +12 Vdc. Pot R53 provides an additional capability to compensate for input offset voltage in AR9. When a valid input signal is presented to the modem receiver after the carrier detect has been in the off (low) state, FET Q8 is held off and a ±2 mV signal is presented to the noninverting input of AR9 through the attenuator composed of R57 + R59 and R58. If, for example, the input voltage at AR9-3 is sufficiently negative to cause the output stage of AR9 to cut off, the voltage at AR9-7 rises to +5.4 Vdc, applying about +2 mVdc to AR9-2.

Before the output stage of AR9 can saturate again, the signal at AR9-3 must go higher than the +2 mVdc set at AR9-2. This means that the limiter cannot respond to modem input signals smaller than 1 mV peak (approximately -54 dBm) if Q8 is pinched off. If Q8 is turned on, the positive feedback voltage at AR9-2 is limited to ±0.6 mVdc swings, thus allowing the comparator to switch states for modem input signals of 0.3 mV peak (-64 dBm).

The two sensitivity settings of the limiter are controlled by the carrier detect slicer circuit. If no data has been received for some time, carrier detect is low, pinching Q8 off and setting the sensitivity to -54 dBm. When carrier detect is high, Q8 is turned on, increasing the sensitivity to -64 dBm. The higher sensitivity is provided to allow the accurate reproduction of input signal zero crossings by the limiter when the input level is low.

j. Frequency Doubler Circuit: The squarewave output from the limiter is applied to the frequency doubler where the wave train is differentiated and essentially full-wave-rectified to obtain a train of trigger pulses with a constant amplitude and a repetition rate of twice the incoming signal (and limiter output).

The output of the limiter circuit switches between approximately +0.25 Vdc and +5.4 Vdc; this waveform is applied to R62 and C32. When the limiter output switches to +5.4 Vdc, a short positive-sloped spike is coupled through C32 to the cathode of CR10 where it is blocked from passing to the base of Q10. The high-going limiter output also supplies base drive through R62 to the base of Q9, saturating Q9 and coupling a negative-sloped spike through C33 and CR9 to the base of Q10. When a low-going spike is applied to the base of Q10, it causes a high-going spike at the collector of Q10. Similarly, when the limiter output goes low, a negative-sloped spike is applied to the base of Q10 through C32 and CR10, causing a high-going spike at the collector of Q10. If the output of the limiter is a 50 percent duty-cycle waveform, the train of pulses at the frequency doubler output (Q10 collector) will have exactly twice the frequency of the frequency doubler output waveform. Q10 further acts as a buffer amplifier, providing a low output impedance source of trigger pulses to the oneshot while isolating the differentiating capacitors C32 and C33 from the positive feedback voltage around the amplifier AR10 in the oneshot.

k. Receiver Oneshot Circuit: The output pulses from the frequency doubler circuit trigger the oneshot to produce a rectangular pulse train. The change in average dc value of this

rectangular pulse train is directly proportional to the change in repetition rate of the trigger pulses and, hence, proportional also to the change in input signal frequency.

In its stable (inactive) state oneshot amplifier AR10-6 is in negative saturation, and the oneshot output (cathode of CR12) is clamped to -5.6 Vdc through CR12. The negative output voltage is fed back to the noninverting input of AR10 through the voltage divider comprised of R69 and R70, holding the noninverting input to -2.8 Vdc. The negative saturation voltage at AR10-6 is also applied to a voltage divider formed by R75 and R74, saturating the collector of Q11 at approximately 0 Vdc. This action holds the ungrounded side of the timing capacitor C34 (inverting input of AR10) very close to ground through R82. Since the noninverting input voltage (-5.4 Vdc) is less than the inverting input voltage (approximately 0 Vdc), the amplifier is latched in negative saturation, holding the oneshot output in its stable state.

When a high-going pulse is applied to the noninverting input of AR10 from the collector of Q10 (low impedance source), the noninverting input of AR10 is made more positive than the inverting input of AR10 (0 Vdc). This condition causes AR10 to switch from negative saturation to positive saturation, and the metastable (active) state of the oneshot is initiated. The oneshot output is bounded to +5.6 Vdc by the clamping action of CR11, and the output voltage is divided by R70 and R69 and applied to the noninverting input of AR10. The positive voltage at AR10-6 causes Q11 to cut off and C34 begins to charge from 0 Vdc toward +5.6 Vdc through the combination of R72, R73, and R76, with the setting of R76 establishing the rate of charge. Since the voltage at the inverting input of AR10 is initially less than the +2.8 Vdc at the noninverting input, the output of AR10 is latched in positive saturation. Finally, when C34 has charged up higher than +2.8 Vdc, the voltage at the inverting input of AR10 exceeds the voltage at the noninverting input of AR10, and the output of AR10 switches to negative saturation. This causes Q11 to saturate, quickly discharging C34 through R71, and the oneshot resumes its stable state.

The adjustment range of R76 allows the oneshot (metastable) period to be set for a (positive) duty cycle of 25 percent when the trigger pulse frequency equals 4250 pulses per second. This frequency is produced when an input signal of 2125 Hz is applied successively to the modem receiver limiter and frequency doubler stages.

l. Receiver Discriminator Low-Pass Filter Circuit: The rectangular output waveform from the oneshot circuit is fed into the discriminator low-pass filter circuit. Since the cutoff frequency of this filter (150 Hz) is so much lower than the repetition frequency of the oneshot output pulses, the filter acts essentially as an analog integrator. The filter output, then, is a dc voltage equal to the average value of the oneshot pulse train voltage. A change in input frequency thus causes a proportional change in the filter output voltage.

m. Discrimination Amplifier Circuit: The discriminator amplifier modifies (biases and amplifies) the output signal from the discriminator low-pass filter to make it easier to compare in the received-data slicer and the carrier-detect slicer circuits.

The nominal swing in the discriminator low-pass filter output, which corresponds to a SPACE-frequency-to-MARK-frequency transition at the receiver input, is from -2.93 Vdc to -2.67 Vdc. It is convenient to translate this voltage swing upward so that the decision as to whether the output voltage of the discriminator filter is high or low (corresponding to MARK or SPACE received frequencies, respectively) may be made about ground potential. Such a translation is provided by the discriminator amplifier. When the receiver input frequency is 2125 Hz, the oneshot pulse width is adjusted so that the discriminator amplifier output voltage is zero.

In addition to providing convenient positive translation of the discriminator output voltage, the discriminator amplifier also applies a gain of nearly +25 to the output swing of the discriminator low-pass filter. This additional gain allows the output of the amplifier to swing from -3.25 Vdc for a SPACE (2025 Hz) input

to +3.25 Vdc for a MARK (2225 Hz) input with 0 Vdc corresponding to the mid-band frequency of 2125 Hz.

n. Received-Data Slicer Circuit: The received-data slicer circuit monitors the output voltage of the discriminator amplifier, providing a MARK level to the XMT/RCV logic for any input signal whose frequency is 2125 Hz or higher. It produces a SPACE level to the XMT/RCV logic for any input signal whose frequency is less than 2125 Hz.

When the discriminator amplifier output voltage (AR15-6) is higher than 0 Vdc (corresponding to a MARK input frequency), the inverting input voltage to comparator AR16 is made more positive than noninverting input voltage which is fixed at ground potential. This causes the output of AR16 to saturate, pulling the EIADATIN line to -12 volts through R101. When the discriminator amplifier output voltage is less than 0 Vdc (corresponding to a SPACE input frequency condition), the inverting input voltage to AR16 is made more negative than the noninverting input voltage (0 Vdc). This causes the output stage of AR16 to saturate positive, causing the EIADATIN line to reach +12 volts through R101.

The positive feedback around AR16, provided through R93, decreases the change of comparator output parasitic oscillations as the noninverting input slews through the region near 0 Vdc. It also provides a margin of immunity (approximately 2 mV) to small ripples present at the discriminator amplifier output.

The presence of R91 and C43 provides some additional filtering of the discriminator amplifier output to attenuate any high frequency transients present.

o. Carrier Detect Slicer Circuit: The carrier-detect slicer circuit monitors the output voltage of the discriminator amplifier, providing an in-band signal to the carrier-detect delay circuit for any input signal whose frequency lies between 1950 Hz and 2300 Hz. It produces an out-of-band signal to the carrier-detect delay circuit for any input signal frequency below 1950 Hz or above 2300 Hz.

The biasing of the matched pair of zener diodes CR14/CR15 from the +12 Vdc and -12 Vdc supply buses through R88 and R90 establishes the voltage drops across the zeners at very nearly 5 Vdc. Thus, as the output voltage of AR15-6 is applied to the cathode of CR15 (anode of CR14), the voltage at the cathode of CR14 is set 5 volts above the discriminator amplifier output voltage. Similarly, the voltage at the anode of CR15 is set 5 volts below the discriminator amplifier output voltage.

So long as the voltage at AR15-6 lies in the range -5.6 Vdc to +5.6 Vdc, both diodes CR13 and CR18 remain back-biased and the small positive voltage set by the divider R89/R95 holds AR13 in positive saturation (since with CR13 and CR18 back-biased, AR13-3 is slightly positive and R94 is grounded through R94).

If the voltage at AR15-6 rises about +5.6 Vdc, CR13 remains back-biased but CR18 is forward-biased, increasing the voltage at AR13-2 above that at AR13-3. This condition causes AR13-6 to switch to its negative saturation voltage, indicating carrier-out-of-band.

If the voltage at AR15-6 falls below -5.6 Vdc, CR18 remains back-biased but CR13 is forward-biased, reducing the voltage at AR13-3 below that at AR13-2. This condition causes AR13-6 to switch to its negative saturation voltage, indicating carrier-out-of-band.

p. Carrier Detect Delay Circuit: The carrier-detect delay circuit provides an in-band (EIADCD high) level to the transmit/receive logic in accord with the in-band signal from the carrier-detect slicer circuit. The rising transition in the carrier-detect signal to the transmit/receive logic is delayed until a nominal 150 msec after the carrier-detect slicer in-band indication is given. The carrier-detect delay circuit also provides an out-of-band (EIADCD low) level to the transmit/receive logic, corresponding to the out-of-band signal from the carrier-detect slicer circuit. The falling transition in the EIADCD signal is delayed until a nominal 100 msec after the carrier-detect slicer out-of-band indication is given.

When the carrier detect slicer output (AR13-6) is positively saturated, the base-emitter junction of Q12 is forward-biased, and its collector saturates at about +0.5 Vdc. In this state CR16 is back-biased approximately 11 volts with +0.5 Vdc at its anode. This small positive voltage allows the N-channel FET Q8 to turn on, causing the limiter sensitivity to increase. The forward-biased base-emitter diode drop from Q12 appears across C44 and as a reverse bias across CR17. The base-emitter drop also holds AR14-3 at +0.6 Vdc, causing the output stage of AR14 to saturate positive and hold the carrier detect line (EIADCD) to +12 volts.

If a loss of in-band carrier causes the voltage at AR13-6 to switch to negative saturation, Q12 is immediately turned off and CR16 is forward-biased through R96 to clamp the gate of Q8 to approximately -11 Vdc. These conditions quickly pinch off Q8, switching the limiter sensitivity to its lower level. The carrier-detect "dropout" delay cycle begins as Q12 is cut off and the voltage between R97 and C44 slowly decreases from +0.6 volts as C44 is discharged toward the saturation voltage of AR13 through R97. The output stage of AR14 remains cut off and carrier detect remains at +12 volts until the voltage between R99 and C44 goes slightly negative, approximately 50 msec after AR13 goes into negative saturation. When the voltage at AR14-2 goes negative, the output stage of AR14 is saturated and the carrier-detect line is switched to -12 volts.

After the carrier-detect line has been low for some time, the voltage between C44 and R99 is clamped to -2 volts by the forward-biased multipellet diode CR17 (CR17 serves to limit the differential voltage between AR14-2 and AR14-3, while establishing a 2-volt reference across C44). If the output of the carrier-detect slicer (AR13-6) switches from negative to positive saturation, indicating the presence of in-band data on the transmission line, C44 begins to charge from -2 volts toward the positive saturation output voltage of AR13 through R97. When the voltage between R99 and C44 goes slightly positive (150 msec after switching of AR13), the output stage of AR14 is cut off and the carrier-detect line is pulled up to +12 volts. C44 continues to charge up to +0.6 volts, at which time Q12 is saturated and the clamping action of the forward base-emitter diode halts the charging process. As Q12 saturates it quickly pulls the gate voltage at Q8 from approximately -11 to +0.5 volts, turning Q12 on and increasing the sensitivity of the receiver limiter.

3-9.1.5 Modem-Answer Mode (TH). The TH Modem is an answer-mode PC card modem, designed to communicate with the comparable originate-mode TL Modem. The transmitter section of the TH Modem converts a MARK level (EIADATOT low) from the serial transmitter into a MARK (2225 Hz) frequency on the transmission line and converts a SPACE level (EIADATOT high) into a SPACE (2025 Hz) frequency on the transmission line. The TH Modem receiver section converts a received MARK (1270 Hz) frequency on the transmission line into a MARK level (EIADATIN low) for the serial receiver and converts a received SPACE (1070 Hz) frequency on the transmission line into a SPACE level (EIADATIN high) for the serial receiver. Modulation and demodulation may be carried out for data rates up to 300 baud. A block diagram of the TH Modem is shown in Figure 3-9.2.

a. Reference Regulator Circuit: The reference regulator circuit provides high frequency filtering for the +12 Vdc and -12 Vdc terminal power supply bus connections to the TH Modem PC card. The circuit's other function is to develop stable, low impedance, reference voltage sources for the other circuits on the PC card. The circuit includes two complementary emitter followers (Q6, Q7) whose output voltages track the voltage developed across the matched pair of zener diodes CR4/CR5. The anode of CR5 also provides -5.6 volts for use in the receiver discriminator amplifier circuit as a bias reference to track the +5V and -5V reference voltages.

   Data-set-ready and clear-to-send are held high through R38 and R29 whenever power is applied to the terminal.

b. Transmitter triangular Wave Oscillator: The transmitter triangular wave oscillator is the source of 1070 Hz (SPACE) and 1270 Hz (MARK) transmitted frequencies. The oscillator frequency is controlled by the EIADATOT signal from the transmit/receive. The output of

AR1 is fed back to the noninverting input of AR1 through R3, and the output of AR1 is driven into positive or negative saturation. For purposes of explanation, assume that AR1 is initially driven into negative saturation. CR1 is back-biased and CR2 is forward-biased, clamping the voltage at the cathode of CR2 to -5.6 Vdc. The constant negative voltage at the input to the voltage divider network (consisting of R6 through R9) causes the output of the inverting integrator circuit (AR3, R10, C8) to ramp upward linearly with time. The rate at which the ramp rises is determined by the current flowing into the summing node (inverting input) of AR3. The output voltage of AR3 continues to rise to about +3.73 Vdc, at which time the voltage at the noninverting input of AR1 becomes slightly positive because of the R2/R3 voltage divider between the output of AR3 and the cathode of CR2. The positive voltage at the noninverting input of AR1 causes AR1 to go into positive saturation, back-biasing CR2 and forward-biasing CR1 to clamp the voltage at the anode of CR1 to +5.6 Vdc. The constant positive voltage at the input to the voltage divider (R6 through R9) causes the output of AR3 to ramp downward from +3.73 Vdc toward -3.73 Vdc. When the voltage at the output of AR3 reaches -3.73 Vdc, the noninverting input of AR1 is forced negative, and AR1 rapidly reverses states, going into negative saturation again. This action completes a single cycle of the oscillator.

In order to change the frequency of the oscillator waveform, the magnitude of the input current supplied to the integrator is changed by switching the shunt leg of the attenuator (R8, R9) to ground. When the EIADATOT line is high, Q4 is turned off, and Q5 is held pinched off by -12 Vdc through R31. This action opens the R8/R9 leg of the attenuator, allowing all the current available at the cathode of CR2 to flow to or from the integrator input summing junction (AR3-2). The maximum amount of the current, and hence the maximum slope of the integrator output ramp, is determined by adjusting R7. Since the higher the slope, the shorter the time per oscillator cycle, the higher transmitter (MARK) frequency (2225 Hz) is set by adjusting R7 with the EIADATOT line held high. The lower (SPACE) transmitter frequency

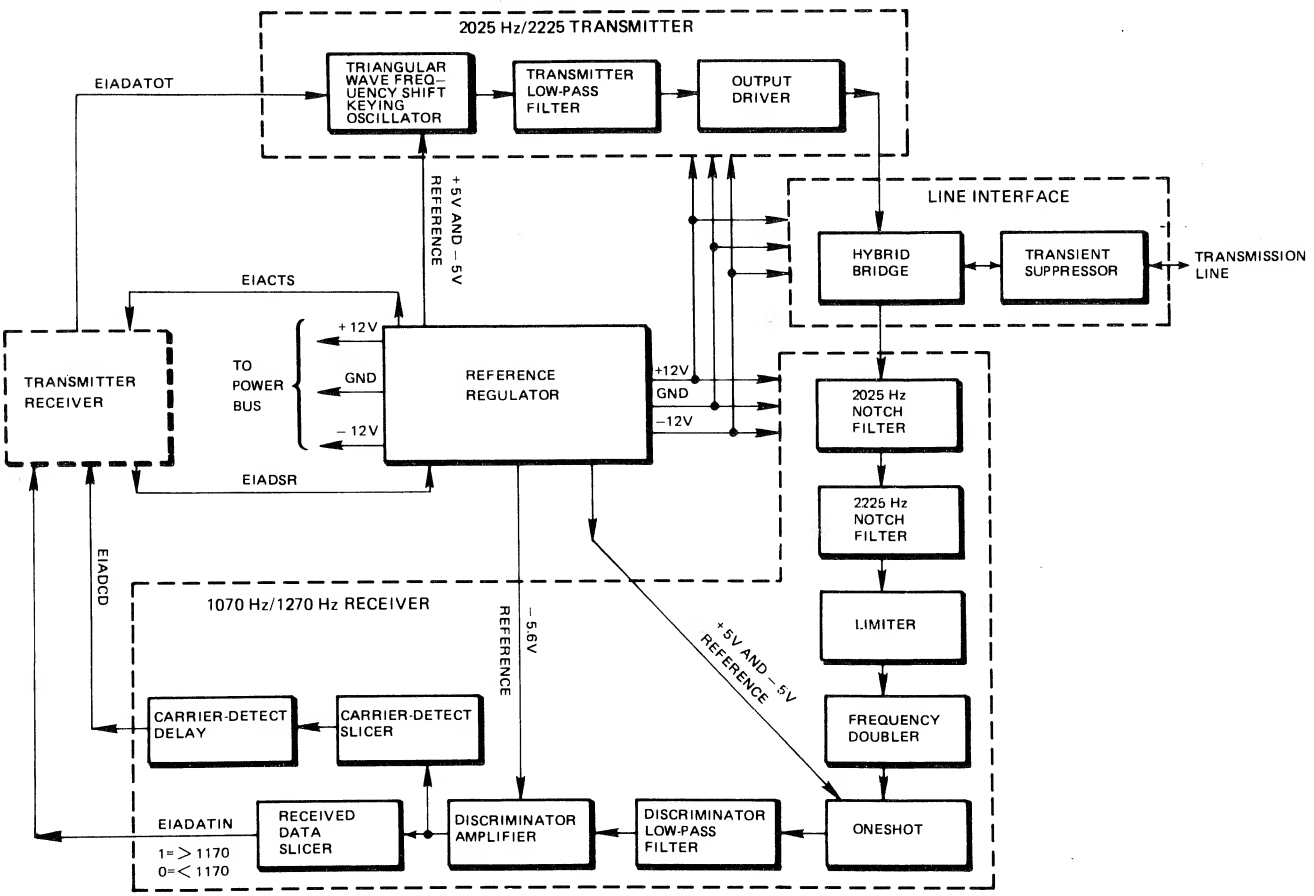

FIGURE 3-9.2. ANSWER MODE (TH) MODEM FUNCTIONAL BLOCK DIAGRAM

(2025 Hz) is produced when Q5 is no longer pinched off by the action of Q4. Since the on resistance of Q5 is only about 20 ohms, the shunt leg (R8, R9) of the attenuator is essentially switched into the circuit, reducing the current flowing through R10 to or from the integrator summing junction input (AR3-2). The magnitude of the current flowing in the shunt leg of the attenuator is adjusted by means of the pot R9 while the transmitted-data line is held low. It is important to note that the adjustments for MARK and SPACE frequencies are interactive. inasmuch as R7 controls the integrator input current whether the shunt leg of the attenuator is switched in or out of the circuit. Hence the MARK frequency (2225 Hz) must be set by R7 before setting the SPACE frequency (2025 Hz) with R9.

c. Transmitter Low-Pass Filter: The triangle wave output from the transmitter oscillator circuit may be altered to produce a low distortion sine wave at the oscillator fundamental frequency by attenuating all harmonics of the fundamental with the XMITTER low-pass filter (R11-R13, C9-C12, and AR4).

d. Transmitter Output Driver: The transmitter output driver circuit consists of variable attenuator R18 from the output of the transmitter low-pass, followed by noninverting voltage follower AR6. By adjusting the wiper position on R18, the output level transmitted may be adjusted over the range from +5 dBm to less than -40 dBm.

e. Communication Line Transient Suppressor Circuit: The zener diodes CR7 and CR8 are 6.8-volt units rated at 5 watts. Their function is to limit the difference-mode signal amplitude at the primary (transmission line side) of transformer T1 to an absolute maximum of about 7.5 volts. Chokes L3 and L4, in conjunction with high voltage capacitors C18 and C19 and associated circuit resistances, form low-pass filter sections which limit the coupling of high frequency common mode signals (spikes, etc.) from the primary to the secondary of T1.

f. Hybrid Bridge Circuit: The hybrid bridge circuit performs three important functions. First, it provides the proper driving and terminating impedance to match the modem to the transmission line. Second, it provides isolation between the transmitter and receiver of the modem to prevent a strong transmitted signal from swamping a small received signal. Third, the bridge components are chosen to limit the bandwidth of the modem receiver.

The bridge's operation is dependent on the balancing of the impedance in its two arms: R14/R39 and R17/R41/T1. For balancing considerations R15 may be neglected, since the very large input impedance of operational amplifier AR5 does not load it. Consider the case when the modem is transmitting into a 600-ohm transmission line termination on which no other signal is impressed. The resistors R14, R39, R17, and R41 are chosen so that the ratio of values of R14 to R39 equals the ratio of values of R17 to the series combination of R41, the line impedance (600 ohms, reflected through 1:1 transformer T1), and the equivalent winding resistance of T1. Since R39 provides negative feedback around AR5, the difference voltage between the inverting and noninverting inputs to AR5 is driven to zero. Since the difference voltage from AR5-2 to AR5-3 is zero, and the bridge resistances are proportional, the voltage across R14 equals the voltage across R17. This means that the voltage across R39 must equal the voltage from AR5-3 to ground; i.e., the output of the bridge (AR5-6) is identically zero. Therefore, the bridge provides 30 to 35 dB attenuation between the transmitter and receiver.

With the transmitter off AR6-6 will be at ground, and the input impedance to the modem appears as the series combination of R17, R41, and the resistance of the secondary winding of T1 (typically slightly over 600 ohms for the total). This combination is set to 600 ohms so as to match the transmission line impedance. The total input impedance is tapped by AR5-3 via R15 between R41 and R17; thus, about 5/6 of the input signal is present at the noninverting input to AR5. Since R14 is at signal ground with respect to receiving signals from the transmission line. The overall gain is approximately 2.0 from the communication line input to the output of AR5 (input to receiver).

The receiver input bandwidth is limited by the simple RC low-pass filter formed by R15 and C16. This filter has a cutoff (3 dB) frequency of about 2.473 kHz and a rolloff rate of -6 dB per octave.

g. 2025 Hz Notch Filter Circuit: AR7 and its associated twin-tee network provide a very narrow band-elimination filter centered at the transmitter SPACE frequency of 2025 Hz. The function of the filter is to severely attenuate any 2025 Hz output signal from the transmitter which "leaks" through the hybrid bridge circuit to the receiver input.

h. 2225 Hz Notch Filter Circuit: AR8 and its attendant twin-tee network provide a very narrow band-elimination filter centered at the transmitter MARK frequency of 2225 Hz. The function of the filter is to severely attenuate any 2225-Hz output signal from the transmitter which "leaks" through the hybrid bridge to the receiver input.

i. Limiter Circuit: The limiter circuit has two functions. The first function is to produce a square wave output which switches as closely as possible to the zero crossings in the input waveform. The output wave switches between +5.4 and +0.25 Vdc. The high output voltage is set by the resistor divider R54/R61 to +12Vdc. The low output voltage is set by the saturation voltage of the output stage of AR9.

The second function of the limiter circuit is to determine the sensitivity of the receiver. The sensitivity of the limiter may be varied by feeding back a small portion of the output waveform to establish the threshold voltage through which the limiter input must pass in order to cause an output transition. The greater the amplitude of this positive feedback voltage, the larger the input signal must be to cause a transition at AR9-7.

C30, R51, and C31 form a rudimentary bandpass filter with nominal (-3 dB) cutoff frequencies of 570 Hz and 88.4 kHz. This filter further restricts the bandwidth to which the receiver is sensitive. Since C30 couples the limiter circuit to the preceding receiver stage, the input signal applied to the inverting input of the comparator (AR9-3) has no dc component. The band-limited input signal is therefore an ac signal twice the amplitude of the received signal on the transmission line since the hybrid bridge provides a gain of two. The (positive) feedback signal supplied to the noninverting input AR9-2 must also be an ac signal with no dc component, but the voltage at AR9-7 never goes negative.

A pull-down network composed of R55 and R56 provide the driving potential to pull the feedback signal below ground. Pot R56 provides adjustment to compensate for variation in input offset voltage as well as tolerance variations in R54, R61, and +12 Vdc. Pot R53 provides an additional capability to compensate for input offset voltage in AR9. When a valid input signal is presented to the modem receiver after the carrier detect has been in the off (low) state, FET Q8 is held off and a ±2 mV signal is presented to the noninverting input of AR9 through the attenuator composed of R57 + R59 and R58. If, for example, the input voltage at AR9-3 is sufficiently negative to cause the output stage of AR9 to cut off, the voltage at AR9-7 rises to +5.4 Vdc, applying about +2 mVdc to AR9-2.

Before the output stage of AR9 can saturate again, the signal at AR9-3 must go higher than the +2 mVdc set at AR9-2. This means that the limiter cannot respond to modem input signals smaller than 1 mV peak (approximately -54 dBm) if Q8 is pinched off. If Q8 is turned on, the positive feedback voltage at AR9-2 is limited to ±0.6 mVdc swings, thus allowing the comparator to switch states for modem input signals of 0.3 mV peak (-64 dBm).

The two sensitivity settings of the limiter are controlled by the carrier detect slicer circuit. If no data has been received for some time, carrier detect is low, pinching Q8 off and setting the sensitivity to -54 dBm. When carrier detect is high, Q8 is turned on, increasing the sensitivity to -64 dBm. The higher sensitivity is provided to allow the accurate reproduction of input signal zero crossings by the limiter when the input level is low.

j. Frequency Doubler Circuit: The squarewave output from the limiter is applied to the

frequency doubler where the wave train is differentiated and essentially full-wave rectified to obtain a train of trigger pulses with a constant amplitude and a repetition rate of twice the incoming signal (and limiter output).

The output of the limiter circuit switches between approximately +0.25 Vdc and +5.4 Vdc; this waveform is applied to R62 and C32. When the limiter output switches to +5.4 Vdc, a short positive-sloped spike is coupled through C32 to the cathode of GR10 where it is blocked from passing to the base of Q10. The high-going limiter output also supplies base drive through R62 to the base of Q9, saturating Q9 and coupling a negative-sloped spike through C33 and CR9 to the base of Q10. When a low-going spike is applied to the base of Q10, it causes a high-going spike at the collector of Q10. Similarly, when the limiter output goes low, a negative-sloped spike is applied to the base of Q10 through C32 and CR10, causing a high-going spike produced at the collector of Q10. If the output of the limiter is a 50 percent duty cycle waveform, the train of pulses at the frequency doubler output (Q10 collector) will have exactly twice the frequency of the frequency doubler output waveform. Q10 further acts as a buffer amplifier, providing a low output impedance source of trigger pulses to the oneshot while isolating the differentiating capacitors C32 and C33 from the positive feedback voltage around the amplifier AR10 in the oneshot.

k. Receiver Oneshot Circuit: The output pulses from the frequency doubler circuit trigger the oneshot to produce a rectangular pulse train. The change in average dc value of this rectangular pulse train is directly proportional to the change in repetition rate of the trigger pulses and, hence, proportional also to the change in input signal frequency.

In its stable (inactive) state, oneshot amplifier AR10-6 is in negative saturation, and the oneshot output (cathode of CR12) is clamped to -5.6 Vdc through CR12. The negative output voltage is fed back to the noninverting input of AR10 through the voltage divider comprised of R69 and R70, holding the noninverting input to -2.8 Vdc. The negative saturation voltage at AR10-6 is also applied to a voltage divider formed by R75 and R74, saturating the collector of Q11 at approximately 0 Vdc. This action holds the ungrounded side of the timing capacitor C34 (inverting input of AR10) very close to ground through R82. Since the noninverting input voltage (-5.4 Vdc) is less than the inverting input voltage (approximately 0 Vdc), the amplifier is latched in negative saturation, holding the oneshot output in its stable state.

When a high-going pulse is applied to the noninverting input of AR10 from the collector of Q10 (low impedance source), the noninverting input of AR10 is made more positive than the inverting input of AR10 (0 Vdc). This condition causes AR10 to switch from negative saturation to positive saturation, and the metastable (active) state of the oneshot is initiated. The oneshot output is bounded to +5.6 Vdc by the clamping action of CR11, and the output voltage is divided by R70 and R69 and applied to the noninverting input of AR10. The positive voltage at AR10-6 causes Q11 to cut off and C34 begins to charge from 0 Vdc toward +5.6 Vdc through the combination of R72, R73, and R76, with the setting of R76 establishing the rate of charge. Since the voltage at the inverting input of AR10 is initially less than the †3.8 Vdc at the noninverting input, the output of Ar10 is latched in positive saturation. Finally, when C34 has charged up higher than +2.8 Vdc, the voltage at the inverting input of AR10 exceeds the voltage at the noninverting input of AR10, and the output of AR10 switches to negative saturation. This causes Q11 to saturate, quickly discharging C34 through R71, and the one-shot resumes its stable state.

The adjustment range of R76 allows the oneshot (metastable) period to be set for a (positive) duty cycle of 25 percent when the trigger pulse frequency equals 2340 pulses per second. This frequency is produced when an input signal of 1170 Hz is applied successively to the modem receiver limiter and frequency doubler stages.

l. Receiver Discriminator Low-Pass Filter Circuit: The rectangular output waveform from the

oneshot circuit is fed into the discriminator low-pass filter circuit. Since the cutoff frequency of this filter (150 Hz) is so much lower than the repetition frequency of the oneshot output pulses, the filter acts essentially as an analog integrator. The filter output, then, is a dc voltage equal to the average value of the oneshot pulse train voltage. A change in input frequency thus causes a proportional change in the filter output voltage.

m. Discriminator Amplifier Circuit: The discriminator amplifier modifies (biases and amplifies) the output signal from the discriminator low-pass filter to make it easier to compare in the received-data slicer and the carrier-detect slicer circuits.

The nominal swing in the discriminator low-pass filter output, which corresponds to a SPACE frequency-to-MARK frequency transition at the receiver input, is from -2.93 Vdc to -2.67 Vdc. It is convenient to translate this voltage swing upward so that the decision as to whether the output voltage of the discriminator filter is high or low (corresponding to MARK to SPACE received frequencies, respectively) may be made about ground potential. Such a translation is provided by the discriminator amplifier. When the receiver input frequency is 1170 Hz, the oneshot pulse width is adjusted so that the discriminator amplifier output voltage is zero.

In addition to providing the convenient positive translation of the discriminator output voltage, the discriminator amplifier also applies a gain of nearly +25 to the output swing of the discriminator low-pass filter. This additional gain allows the output of the amplifier to swing from -3.25Vdc for a SPACE (1070 Hz) input to +3.25 Vdc for a MARK (1270 Hz) input with 0 Vdc corresponding to the midband frequency of 1170 Hz.

n. Received Data Slicer Circuit: The received-data slicer circuit monitors the output voltage of the discriminator amplifier, providing a MARK level to the XMT/RCV logic for any input signal whose frequency is 1170 Hz or higher. It produces a SPACE level to the XMT/RCV logic for any input signal whose frequency is less than 1170 Hz.

When the discriminator amplifier output voltage (AR16-6) is higher than 0 Vdc (corresponding to a MARK input frequency) the inverting input voltage to comparator AR16 is made more positive than the noninverting input voltage, which is fixed at ground potential. This causes the output of AR16 to saturate, pulling the EIADATIN line to -12 volts through R101. When the discriminator amplifier output voltage is less than 0 Vdc (corresponding to a SPACE input frequency condition), the inverting input voltage to AR16 is made more negative than the noninverting input voltage (0 Vdc). This causes the output stage of AR16 to saturate positive, causing the EIADATIN line to reach +12 volts through R101.

The positive feedback around AR16, provided through R93, decreases the chance of comparator output parasitic oscillations as the noninverting input slews through the region near 0 Vdc. It also provides a margin of immunity (approximately 2 mV) to small ripples present at the discriminator amplifier output.

The presence of R91 and C43 provides some additional filtering of the discriminator amplifier output to attenuate any high frequency transients present.

o. Carrier Detect Slicer Circuit: The carrier-detect circuit monitors the output voltage of the discriminator amplifier, providing an in-band signal to the carrier-detect delay circuit for any input signal whose frequency lies between 994 Hz and 1339 Hz. It produces an out-of-band signal to the carrier-detect delay circuit for any input signal frequency below 994 Hz or above 1339 Hz.

The biasing of the matched pair of zener diodes, CR14/CR15, from the +12 Vdc and -12 Vdc supply buses through R88 and R90 establishes the voltage drops across the zeners at very nearly 5 Vdc. Thus, as the output voltage of AR15-6 is applied to the cathode of CR15 (anode of CR14), the voltage at the cathode of CR14 is set 5 volts above the discriminator amplifier output voltage. Similarly, the voltage at the anode of CR15 is set 5 volts below the discriminator amplifier output voltage.

So long as the voltage at AR15-6 lies in the range -5.6 Vdc to +5.6 Vdc, both diodes CR13 and CR18 remain back-biased and the small positive voltage set by the divider R89/R95 holds AR13 in positive saturation (since with CR13 and CR18 back-biased AR13-3 is slightly positive and R94 is grounded through R94).

If the voltage at AR15-6 rises about +5.6 Vdc, CR13 remains back-biased, but CR18 is forward-biased, increasing the voltage at AR13-2 above that at AR13-3. This condition causes AR13-6 to switch to its negative saturation voltage, indicating carrier-out-of-band.

If the voltage at AR15-6 falls below -5.6 Vdc, CR18 remains back-biased, but CR13 is forward-biased, reducing the voltage at AR13-3 below that at AR13-2. This condition causes AR13-6 to switch to its negative saturation voltage, indicating carrier-out-of-band.

p. Carrier Detect Delay Circuit: The carrier-detect circuit provides an in-band (EIADCD high) level to transmit/receive logic in accord with the in-band signal from the carrier-detect slicer circuit. The rising transition in the carrier-detect signal to the transmit/receive logic is delayed until a nominal 150 msec after the carrier-detect slicer in-band indication is given. The carrier-detect delay circuit also provides an out-of-band (EIADCD low) level to the transmit/receive logic, corresponding to the out-of-band signal from the carrier-detect slicer circuit. The falling transition in the (EIADCD) signal is delayed until a nominal 100 msec after the carrier-detect slicer out-of-band indication is given.

When the carrier detect slicer output (AR13-6) is positively saturated, the base-emitter junction of Q12 is forward-biased, and its collector saturates at about +0.5 Vdc. In this state CR16 is back-biased by approximately 11 volts with +0.5 Vdc at its anode. This small positive voltage allows the N-channel FET Q8 to turn on, causing the limiter sensitivity to increase. The forward-biased base-emitter diode drop from Q12 appears across C44 and as a reverse bias across CR17. The base-emitter drop also holds AR14-3 at +0.6 Vdc, causing the output stage of AR14 to saturate positive and hold the carrier detect line (EIADCD) to +12 volts.

If a loss of in-band carrier causes the voltage at AR13-6 to switch to negative saturation, Q12 is immediately turned off and CR16 is forward biased through R96 to clamp the gate of Q8 to approximately -11 Vdc. These conditions quickly pinch off Q8, switching the limiter sensitivity to its lower level. The carrier-detect "dropout" delay cycle begins as Q12 is cut off and the voltage between R97 and C44 slowly decreases from +0.6 Vdc as C44 is discharged toward the saturation voltage of AR13 through R97. The output stage of AR14 remains cut off and carrier detect remains at +12 Vdc until the voltage between R99 and C44 goes slightly negative, approximately 50 msec after AR13 goes into negative saturation. When the voltage at AR14-2 goes negative, the output stage of AR14 is saturated and the carrier detect line is switched to -12 volts.

After the carrier detect line has been low for some time, the voltage between C44 and R99 is clamped to -2 Vdc by the forward-biased multipellet diode CR17 (CR17 serves to limit the differential voltage between AR14-2 and AR14-3, while establishing a 2 volt reference across C44). If the output of the carrier detect slicer (AR13-6) switches from negative to positive saturation, indicating the presence of in-band data on the transmission line, C44 begins to charge from -2 Vdc toward the positive saturation output voltage of AR13 through R97. When the voltage between R99 and C44 goes slightly positive (150 msec after switching of AR13), the output stage of AR14 is cut off and the carrier detect line is pulled up to +12 volts. C44 continues to charge up to +0.6 Vdc, at which time Q12 is saturated and the clamping action of the forward base-emitter diode halts the charging process. As Q12 saturates, it quickly pulls the gate voltage at Q8 from approximately -11 Vdc to +0.5 Vdc, turning Q12 on and increasing the sensitivity of the receiver limiter.

3-9.2 ANSWER-BACK MEMORY. The Answer-Back Memory PC card is an optional accessory for the 733 ASR or KSR. This circuit automatically transmits any programmed sequence of up to twenty-one 7-bit characters

for station identification. The station identification message is stored in a diode matrix as a series of 7-bit ASCII-coded characters. The matrix, shown in Figure 3-9.3, is arranged to facilitate user programming. Each horizontal row in the matrix (starting with CR1) represents one 7-bit character. The first character is the top row, and bit-1 (LSB) is at the top right (CR1). Thus, character-1 is made up of diodes CR1 (bit-1), CR22, CR43, CR64, CR85, CR106, and CR127 (bit-7). The presence of a diode in any bit position indicates a logic ONE in that bit position. For example, if the first character to be programmed is an uppercase B(1000010), diodes CR1, CR43, CR64, CR85, and CR106 would be cut out, and diodes CR22 and CR127 would be left in.

For each character (greater than 3) needed for station identification, the corresponding diode in the first column (CR148 through CR165) must be removed. For example, if a 15-character message is desired, diodes CR148 through CR159 must be removed and CR160 must be left in the circuit.

The Answer-Back Memory (ABM) is triggered by the HERE IS key (terminal on-line and keyboard not OFF), or by receiving the ENQ code (card set for ASCII), or by receiving FIG and D consecutively (card set for Baudot code) from the serial receiver. When one of these signals is decoded, a flipflop is set (ENQRY or HEREISQ). If the terminal is in HALF DUPLEX, the printer (PRNROF–) and/or recorder (RECROF–) will be disabled while the ABM is transmitting if they are on-line, depending on switch S1-6 and S1-7, as shown in Table 3-9.1. This generates an ABM busy (STOQ–) which removes the clear from the character counter and starts the ABM sequence.

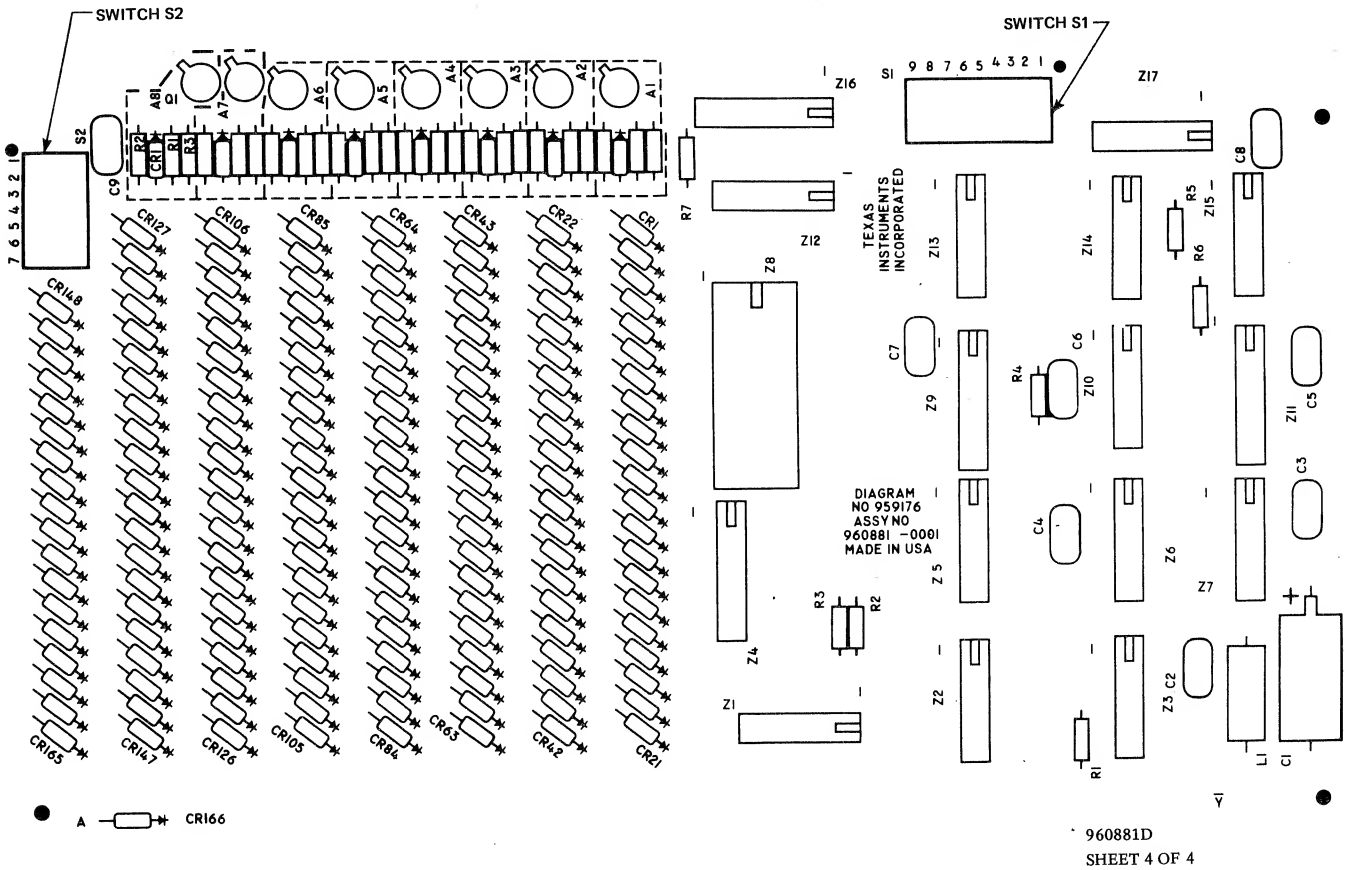

FIGURE 3-9.3. ANSWER-BACK MEMORY DIODE MATRIX

TABLE 3-9.1. ANSWER-BACK MEMORY PC CARD SWITCH OPTIONS

Switch S2	Function
1	Open to remove CR141 (bit 7 character 15) from matrix
2	Open to remove CR21 (bit 1 character 21) from matrix
3	Open to remove CR121 (bit 6 character 16) from matrix
4	Open to remove CR101 (bit 5 character 17) from matrix
5	Open to remove CR81 (bit 4 character 18) from matrix
6	Open to remove CR61 (bit 3 character 19) from matrix
7	Open to remove CR41 (bit 2 character 20) from matrix
Switch S1	**Function**
1	Close for ASCII card; open for Baudot card
2	Close for ASCII card; open for Baudot card
3	Close for ASCII card; open for Baudot card
4	Open for ASCII card; close for Baudot card
5	Open for ASCII card; close for Baudot card
6	Close to disable printing of ABM contents at all times; open to enable printing of ABM contents when online in half-duplex
7	Same as S1-6 except for recorder
8	Close to put an ABM ON indication on pin 9 (future option); open for NO indication (spare run on AUX1R0F)
9	Close to ignore stop bit (continuous memory cycling) open to stop ABM at stop bit programmed
1 and 4	Open both at same time to ignore triggering ABM from the line only

NOTES

1. Switch S2, all positions are normally closed; open only during unit test
2. Switch S1-9 is normally open; closed only during unit test
3. Switches are closed when the dot on the switch rocker arm is down

The ABM then generates and sends a request signal (AUX2REQ–) to terminal control and loads the first character stored in the diode matrix into a parallel-to-serial converter. The ABM then waits for an enable to send signal from terminal control (AUX2ENAS–). This signal and eight system clocks are used to clock the first character from the parallel-to-serial converter to the data bus. At the end of this enable, the character counter is clocked to character-2 and one clock time later another request is generated and the second character is loaded into the output register. This sequence continues until 21 characters are shifted out, or the character counter reaches a character in which one of the stop bit diodes (CR148 through CR165) have been left in. When one of these diodes is sensed, a stop signal is generated (ABMSTP) which prevents generation of another request. The ABM is now ready for another trigger signal.

A remote trigger signal is also available on pin 24 (FSTIME–) of the ABM card. A 5-μsec pulse on this pin will cause the ABM to trigger as if the HERE IS key had been depressed. This signal will trigger the ABM at all times, except when the terminal is not on line. Another signal on pin 19 (AUX2ROF–) is a remote clear for the ABM; bringing this line low will hold a clear on the ABM. Both these remote lines are used with other terminal options. The Answer-Back Memory timing diagram, flow chart, and state equations are shown in Figures 3-9.4 and 3-9.5, and Table 3-9.2, respectively.

ABM switch options are listed in Table 3-9.1.

3-9.3 AUTOMATIC DEVICE CONTROL PC CARD. The Automatic Device Control (schematic 971498) monitors the data bus at all times except when the ADC's master ON/OFF switch is OFF) and decodes control characters DC1, DC2, DC3, DC4, and EOT. The ADC can be programmed to respond to or ignore DC1, DC2, DC3, and DC4 characters coming from the serial receiver, transmitter, or local data bus.

The ADC may be programmed to respond to control characters DC1 through DC4 by opening or closing the appropriate switch sections on S2. Table 3-9.3 lists the decodes and appropriate switch section to select to enable or disable them. When the control characters have been decoded, they are loaded into a register and encoded into four control data bits CDBIT1 through CDBIT4. Approximately 20 μsec later control data strobe DCSTRB– is generated. It is a negative-going 4.9-μsec pulse. These four data bits and the strobe are then sent to the ASR remote cassette control where they are decoded and acted upon. The terminal is programmed to respond to the control character EOT by the installation of resistors R1, R2, and R3. R1, R2, and R3 are installed only if the Auto Answer PC card option is installed in the data terminal. Actuating control character EOT will cause the terminal to disconnect from the line only if the resistors are installed.

The ADC described above supersedes an earlier version of the ADC (Part No. 960891*).The earlier ADC functions the same as the latest model ADC described above, except that the enabling options are programmed with strappable resistors R1 through R12, and there are no provisions for decoding the control character EOT, nor for operation with the Automatic Search Control (ASC) option, and the earlier ADC has no master ON/OFF switch on the PC card. Table 3-9.4 lists the enabling options for the earlier ADC.

3-9.4 ASCII 1200-BAUD RECEIVER PC CARD. The 1200-baud Receiver PC card (schematic 973931 or 962303*) is

*This PC card is obsolete.

TABLE 3-9.2 ANSWER-BACK MEMORY STATE EQUATIONS

STOD	=	(ST1D- x ST2D-)
STID	=	(STDQ x HERISENQ) + (ST2Q x (ABMSTP- x AUX2ENASQ))
ST2D	=	ST1Q + (ST2Q x AUX2ENASQ-)
ABMCLR	=	PWRRST + AUX2ROF
HERISENQ	=	HERISQ + ENQRY
PRNROF	=	PRNLOC- x FULDPX- x STOQ-
AUXIROF	=	STOQ-
RECROF	=	RECLINE x FULDPX- x STOQ-
ABMTRIGRST	=	ABMCLR + TERLIN- + STOQ-
ABMTRIGRST	=	Stop ABM after transmission of memory is complete
ABMCER	=	Stop and reset ABM after the character now being transmitted

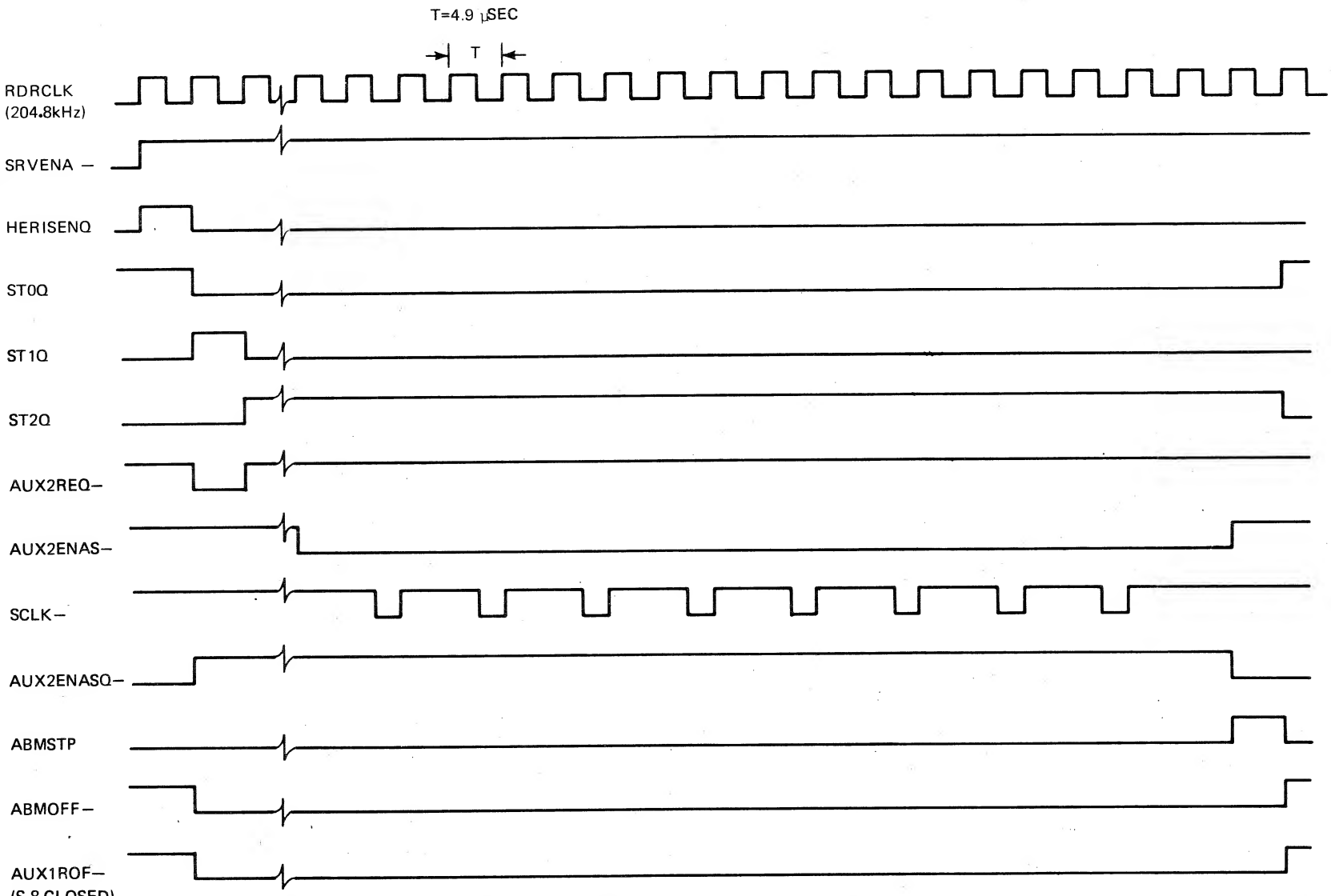

TIMING IS SHOWN TO SEND 1 CHARACTER AND STOP FOR UP TO 21 CHARACTERS;
THE SAME TIMING APPLIES, EXCEPT THAT AT THE END OF EACH AUX2ENAS–,
THE STATE COUNTER RETURNS TO STATE-ONE INSTEAD OF STATE-ZERO.

FIGURE 3-9.4. ANSWER–BACK MEMORY TIMING DIAGRAM

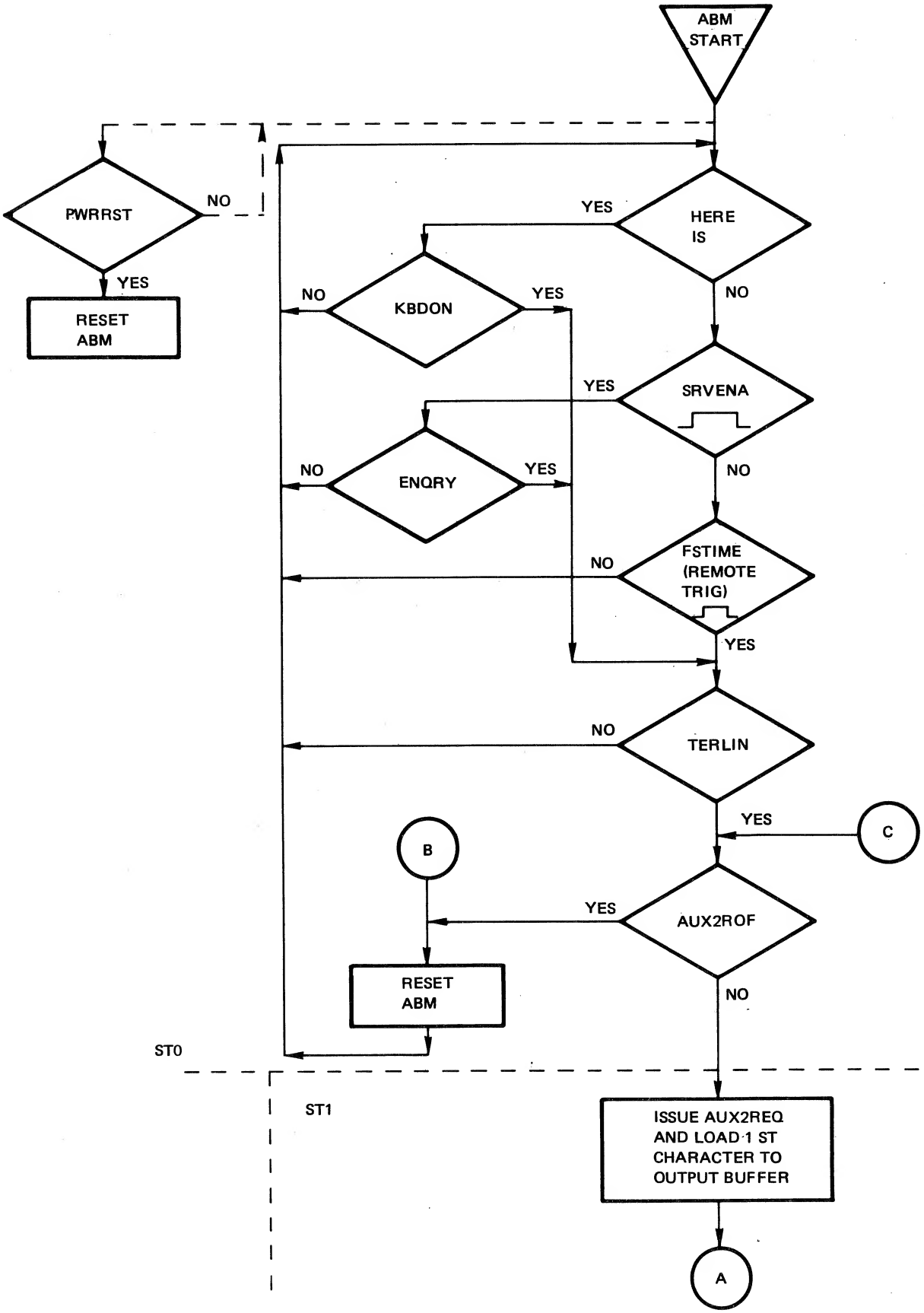

FIGURE 3-9.5. ANSWERBACK MEMORY FLOW CHART (SHEET 1 OF 2)

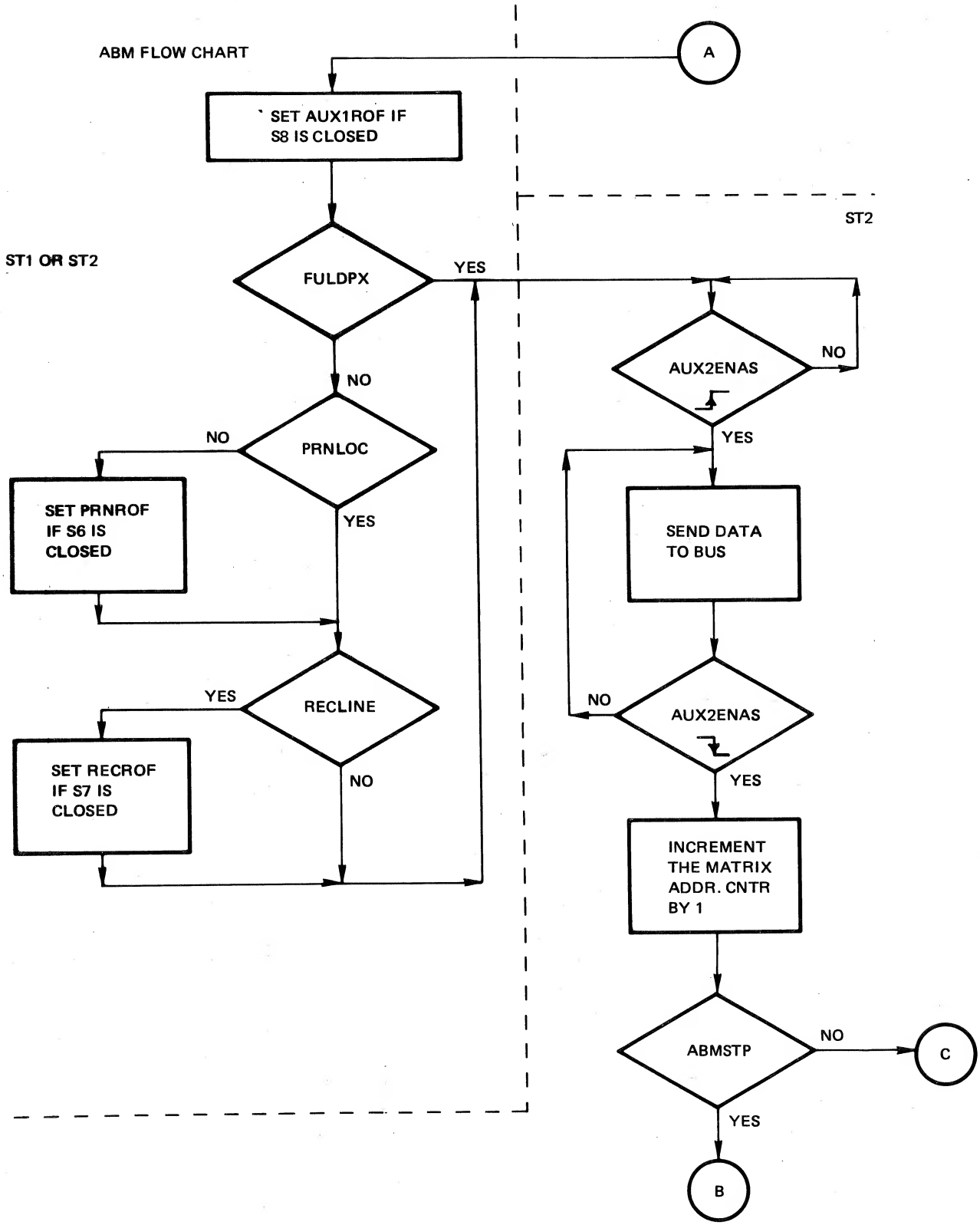

FIGURE 3-9.5. ANSWERBACK MEMORY FLOW CHART (CONTINUED) (SHEET 2 OF 2)

TABLE 3-9.3. AUTO DEVICE CONTROL ENABLING OPTIONS
(for Part No. 971481)

Control Function	Enabling Switch Section		
	To Enable When Transmitting	To Enable When Receiving	To Enable When in Local
DC1 and DC3 (Playback ON/OFF)	S2-1 ON (DC3 only)	S2-2 ON	S2-3 ON
DC2 and DC4 (Record ON/OFF)		S2-4 ON	S2-5 ON

NOTE

Control characters DC1 through DC4 function in the selected operating modes shown above. Close the appropriate switch section on S2 to enable the corresponding function. When the ADC ON/OFF switch is in the OFF position, all ADC functions are disabled except the automatic disconnect on receipt of the EOT character (if the Auto Answer Option is installed).

TABLE 3-9.4. AUTO DEVICE CONTROLLER (EARLIER MODEL) ENABLING OPTIONS
(Part No. 960891)

Control Function	To Enable When Transmitting	To Enable When Receiving	To Enable In Local
DC1 (Playback ON) Resistor Between	R1 J1-J2	R2 J3-J4	R3 J5-J6
DC2 (Record ON) Resistor Between	R7 J13-J14	R8 J15-J16	R9 J17-J18
DC3 (Playback OFF) Resistor Between	R4 J7-J8	R5 J9-J10	R6 J11-J12
DC4 (Record OFF) Resistor Between	R10 J19-J20	R11 J21-J22	R12 J23-J24

NOTE: All resistors are 10 ohm, 0.25 watt, 5 %.

composed of two major sections. The system clock section, which contains the master oscillator, generates the general timing signal used throughout the terminal. The serial receiver section accepts serial data at one of four speeds from an external data set and prepares the data for transmission to other parts of the terminal.

3-9.4.1 System Clocks. The system clock section of the 1200-baud receiver PC card is functionally identical to the clock section of the 300-baud Transmit/Receive PC card (described in Paragraph 3-6.1) with the following exceptions. An additional HIGH SPEED switch is located on the POWER switch panel adjacent to the keyboard to set the terminal to operate at 1200 baud. This switch is independent of the setting of the SPEED switch on the receiver PC card. A block diagram of the system clock structure is given in Figure 3-6.5. When the switch is in the 1200 baud position a SRVCLK of 76.8 kHz is generated.

3-9.4.2 Serial Receiver. Only three differences exist between the 1200-baud receiver section and the 300-baud receiver section (described in Paragraph 3-6.1). First, the 1200-baud receiver accepts TTL data; EIA-to-TTL conversion and enabling is done on the 1200-baud Transmitter PC card. Second, inhibiting of the transmitter while the receiver is receiving a character and the MODE switch is in the HALF DUPLEX position is done on the 1200-baud Transmitter PC card. Third, if the printer is on line and the speed switch is in the 1200 baud position, the printer may be held off (optional strap) with the printer remote off (PRNROF–) signal.

If the optionally strapped PRNROF– signal is not used and visible printing is desired at the 1200-baud speed, filler characters must be added as follows:

(1) Three deletes following each character

(2) Twenty-two deletes after each CARRIAGE return.

The deletes compensate for the 30-msec print cycle required by the printer plus the 190-msec carriage return time needed by the printer mechanism.

3-9.5 ASCII 1200-BAUD TRANSMITTER PC CARD. The 1200-baud Transmitter PC card (schematic 962304) is composed of three sections. The data set interface section generates and accepts the necessary signals to operate with a Bell System Model 202C, 202D, or equivalent Data Set. The input section accepts data from the data bus and loads a 64-character first-in-first-out (FIFO) buffer. The transmitter section accepts data from the output of the FIFO and converts it from parallel to serial for transmission to an external data set.

3-9.5.1 Input. Upon receipt of a transmit enable (XMTENA) and eight system clocks (SCLK) from terminal control, the input section stores the data from the serial data bus (DATA) in the input buffer register on the leading edge of the transmit enable, the line busy flipflop (QLINEBUSY) is set to inhibit terminal control from sending another character. On the trailing edge of XMTENA, the shift-in flipflop (QSIENA) is set. If the first-in-first-out (FIFO) buffer is ready to accept another character, input ready (INPUTRDY) will be high. On the next reader clock (RDRCLK), shift-in (SHIFTIN) is generated to load the character stored in the input buffer register into the FIFO. The eighth data bit loaded into the FIFO may be a MARK (logic ONE), odd or even parity (R6 installed), or the eighth data bit received from the data bus (R11 installed) as determined by the PARITY switch and the two optional resistors (R6 and R11), only one of which is installed at one time. The shift enable flipflop (QSIENA) is cleared as soon as SHIFTIN is generated. The QLINBUSY flipflop is cleared after approximately 800 μsec when in the high-speed mode or after a character is transmitted to the line in the low-speed mode. Holding the line busy for at least 800μsec assures that the recorder has sufficient time to record a character when the system is in HALF-DUPLEX before terminal control sends the next one.

Once a character is loaded into the FIFO, it is asynchronously propagated to the last empty output location. If more than 64 characters are entered before a character is taken from the output, input ready (IR) output from each of the FIFO's goes low, the 65th character cannot be loaded until a character is taken from the output; in addition LINEBUSY– is held low until the input ready to FIFO goes ready.

3-9.5.2 Data Set Interface. The data set interface generates and accepts the necessary signals for operation with an external data set. For 1200-baud operation a Bell 202C or 202D data set represents the external data set; at speeds of 300, 150, and 110 baud, a Bell 103A or equivalent represents the external data set. The 202C and 202D are both half-duplex data sets; hence the request-to-send signal (EIARTS) must be generated and the terminal must wait for the clear-to-send signal (EIACTS) before transmitting any data to the data set. Cable pin assignments for the 202C or D are listed in Table 3-9.5.

Signals generated by the data set interface and their functions are as follows:

a EIA Data Terminal Ready (EIADTR) – This signal is ON (>3.0 volts) as long as the terminal is on-line (TERLINE–, a logic ZERO). The ON condition permits the data set to be connected to the communication channel.

b. EIA Transmitted Data (EIADATOT) – Serial data to be transmitted by the data set; the MARK, or logic ONE voltage is less than - 3.0 volts and the SPACE voltage is greater than 3.0 volts.

c. EIA Request-to-Send (EIARTS) – This signal, when at the MARK level (>3.0 volts), indicates that the terminal wishes to transmit information over the EIADATOT line. As long as the terminal is in the full-duplex mode of operation (FULLDPX– a logic ZERO), EIARTS is held to the MARK condition. In the half-duplex mode (FULLDPX–, a logic ONE) EIARTS is held to the MARK condition as soon as the FIFO indicates it has a character to transmit by bringing output ready (OUTPUTRDY) high. After the last character is sent from the FIFO, OUTPUTRDY goes low. After a 20-msec delay, EIARTS will fall to a SPACE level (EIA low).

Signals accepted by the data set interface and their functions are as follows:

a. EIA data set ready (EIADSR) – When in the MARK condition (>3.0 volts) the signal indicates the external data set is ready to operate. This signal, in conjunction with EIA clear-to-send (EIACTS), enables the transmit section to send serial data to the external data set. In conjunction with EIA data carrier detection (EIADCD), this signal also enables sending the serial data from the data set (EIADATIN) to the 1200-baud Receiver PC card.

b. EIA data carrier detector (EIADCD) – When this signal is in the MARK condition (>3.0 volts), it indicates a valid carrier signal is being received by the external data set.

c. EIA received data (EIADATIN) – Serial data received from the external data set.

d. EIA Clear-to-Send (EIACTS) – When in the MARK condition (> 3.0 volts) this signal indicates the external data set is prepared to transmit data.

3-9.5.3 Transmitter Section. The transmit section (see Figure 3-9.6) accepts parallel data from the output buffer of the FIFO and converts it to serial data for transmission

TABLE 3-9.5. 1200-BAUD, EIA INTERFACE CABLE, PIN FUNCTIONS[4]
(CABLE, TI PART NO. 959372)

Connector Pin Numbers		Pin Function
Terminal	Data Set	
6	20	Data Terminal Ready[1]
7	7	Signal Ground
8	5	Clear to Send[2]
9	6	Data Set Ready[3]
10	3	Received Data
A	1	Protective Ground
C	4	Request to Send[6]
H	2	Transmitted Data
K	8	Data Carrier Detect[5]

NOTES:
[1] Held to an ON condition by the data terminal ON LINE switch.
[2] Turned ON in response to "request to send;" typical delay is approximately 220 msec.
[3] Held to an ON condition when data set is operative; required for terminal operation.
[4] All are used only with external modem.
[5] Held to an ON condition by modem when carrier is received; required by terminal for data reception.
[6] Turned ON when transmission begins; turned OFF 20 msec after transmission ends.

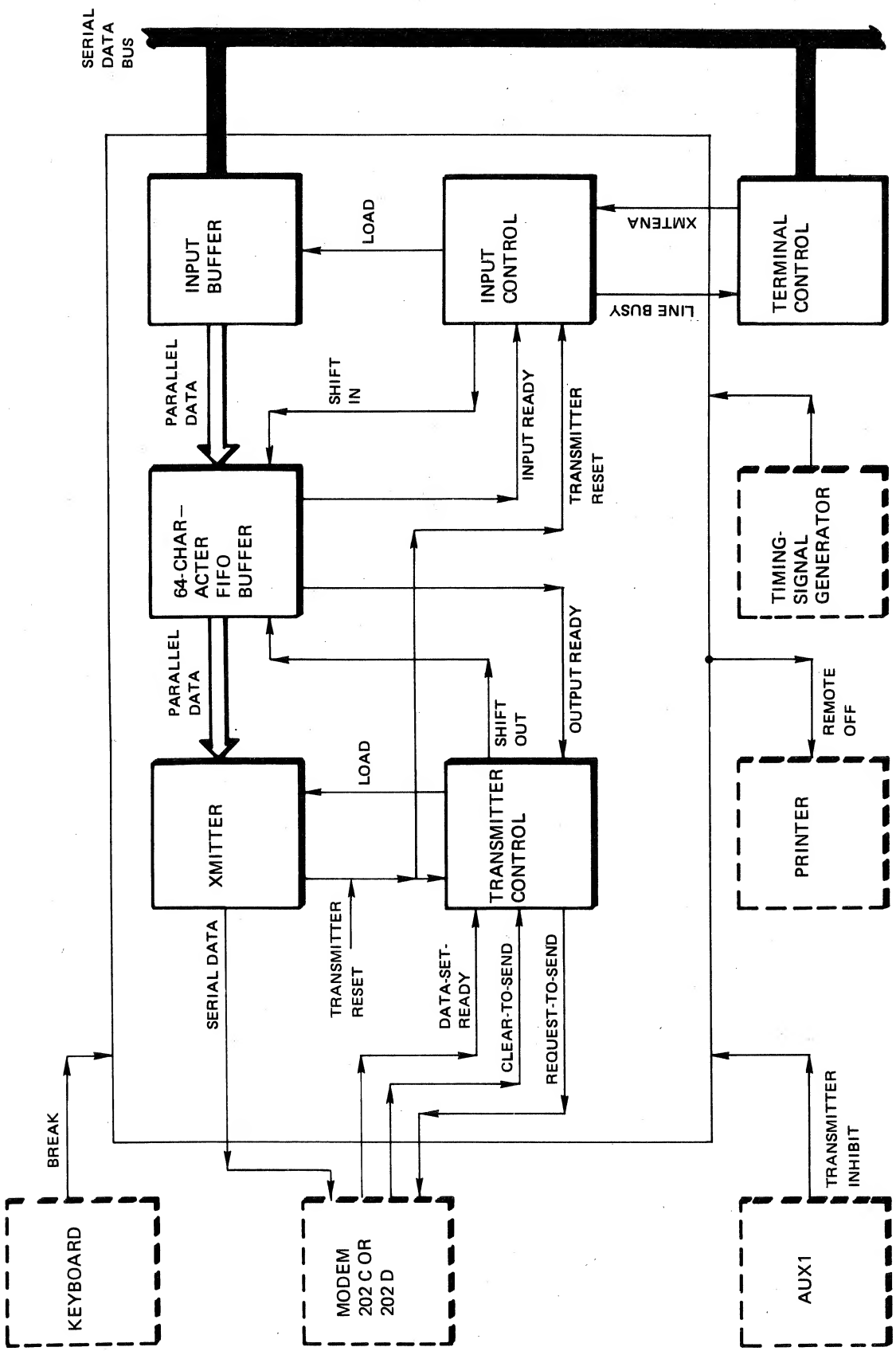

FIGURE 3-9.6. 1200-BAUD TRANSMITTER PC CARD BLOCK DIAGRAM

to an external data set. The transmit section is controlled by the transmit-busy flipflop (XMTBSY). If the FIFO's have data ready for transmission, each FIFO will have the output ready (OR) high; hence QOUTPUTRDY will be high. As soon as XMTENA goes high, the request-to-send flipflop (TTLRTS–) is set to signal the data set that the terminal has data to transmit.

The reader clock (RDRCLK), which occurs after OUTPUTRDY goes high, generates a shift-out pulse (SHIFTOUT) if the data set is prepared to transmit data (ETACTS high) and transmit inhibit (XMTIN4–, generated by the AUX1 device) is not low. The SHIFTOUT pulse sets the XMTBSY flipflop and loads the parallel data into the output buffer register when XMTBSY goes low; the pulse then shifts the next character into the output buffer of the FIFO's, and output ready on each FIFO again goes high. The serial receiver clock (SRVCLK) is divided by 64 to generate the transmit clock (XMTCLK) to shift the character out of the output buffer register to the data set. In addition to the eighth data bit, a start bit (logic ZERO) and stop bit (logic ONE) are added at the beginning and end of the character, respectively. For 10-CPS* operation 2 stop bits are added. The BIT COUNTER counts the number of bits transmitted and sets the transmit reset flipflop (QXMTRST) after the tenth bit has been transmitted (eleventh if the terminal is operating at 10 CPS; i.e., 10 CPS is a logic ONE). Once the transmit flipflop is cleared (XMTBSY logic ZERO), if QOUTPUTRDY goes high (indicating the FIFO's have another character to transmit), another transmit cycle is started. Also, if the terminal is on line (the ON-LINE switch is set) and the BREAK key is depressed, the output line is held to a continuous logic ZERO (SPACE) as long as the BREAK key remains depressed. A timing diagram is shown in Figure 3-9.7.

If the terminal is in the HALF-DUPLEX mode of operation (FULLDPX–, a logic ONE), each time the 1200-baud Receiver PC card receives a character, a reset (RESET) pulse is generated. The RESET pulse goes high after the receiver has received half the start bit and goes back low

*CPS = characters per second

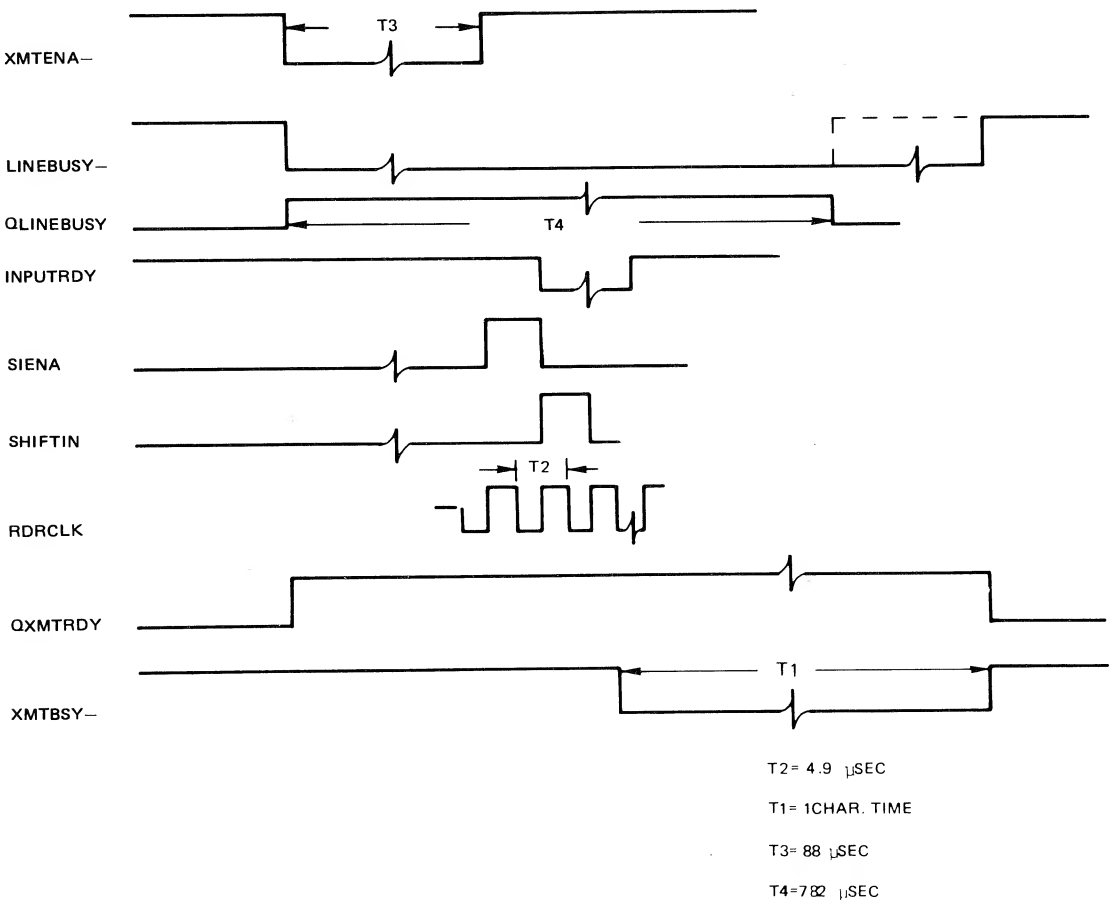

FIGURE 3-9.7. 1200–BAUD TRANSMITTER PC CARD INPUT SECTION TIMING DIAGRAM (FOR 1-CHARACTER INPUT)

after the parity bit is received. When RESET goes high the half-duplex flipflop (RCVHDPX) is set, causing the line to be busy so that no character may be sent to the transmitter. The line is held busy to the transmitter for one character time after the last character is received from the line. This process prevents the transmitter from attempting to transmit a character while the receiver is receiving a character in half-duplex. Conversely, while the transmitter is transmitting a character in half-duplex, the receiver is inhibited by TTLRTS from receiving a character.

3-9.6 AUTO ANSWER CONTROL. The optional Auto Answer Control basically consists of a PC card, a display panel and cabling, and a 6-foot (minimum) EIA or modem cable assembly in kit form. Two versions of the Auto Answer Control Kit are available: one for use with Bell System 103 Data Sets (TI Part No. 960984-0002) and one for use with the Bell System Type-CBS Data Access Arrangement (TI Part No. 960984-0001).

Table 3-9.7 lists interface resistor options for the two versions. Logic diagrams of the Auto Answer Control and its display PC card are shown in drawings 962307 and 962308 in Appendix C of this manual; assembly drawings are contained in Appendix B.

The Auto Answer Control cannot be used with the 733 Data Terminals equipped with the 1200-baud transmit/receive option. Furthermore, TI recommends using the Auto Answer Control in conjunction with the Answer-Back Memory plus the Remote Device Control option or with the Auto Device Controller option, although the Auto Answer will function without them.

The following power is required by either version:

+5 Vdc @ 380 mA (maximum)
+12 Vdc @ 10 mA (maximum)
-12 Vdc @ 8 mA (maximum)

3-9.6.1 Auto Answer Control with Bell 103A Data Set. This version of the Auto Answer Control (TI Part No. 960984-0002) provides the 733 the capability of automatically answering a call on a Bell System DDD network which has a Bell 103A Data Set with auto answer. This version of the Auto Answer Control plugs into PC card slot A8 in the 733 lower enclosure.

In addition to automatically answering a call, the Auto Answer Control includes the following features:

(1) Automatic triggering of the Answer-Back Memory (ABM) option (with ABM plus ADC options or RDC option also installed) when the call is answered. The ABM is triggered after an adjustable (with resistor jumpers) delay of 2 msec to 10.2 sec in nine steps from the carrier detect signal (see Table 3-9.6).

(2) Automatic disconnect from the line and blinding of the printing and record functions if any of the following conditions occur:

(a) A carrier from the originating station is not received within 10 seconds after a call is answered.

(b) The carrier from the originating station is lost for at least 50 msec during the progress of a call.

(c) A disconnect character (usually EOT) is received from the originating station (if a remote device control option is installed).

(d) A SPACE of at least 1.28 seconds without a mark is received from the originating station.

Table 3-9.8 lists resistor options necessary to implement either Auto Answer Control version.

a. Indicators

The following indicators (located on the 733 option panel) are provided with the Auto Answer Control:

RING INDICATOR – lamp blinks 2 seconds on and 4 seconds off with the ring indicator of the Bell System 103A. It illuminates steadily after the call is answered (i.e., the DTR line is turned on) until the carrier is received from the originating station.

TERMINAL READY – illuminates when the 733 ON-LINE switch is ON-LINE, indicating that the terminal will answer an incoming call.

LINE READY – illuminates when the terminal has answered the call, received the carrier from the originating station, and is ready to transmit or receive.

b. Typical Operations

Before leaving the data terminal unattended, the operator must switch the appropriate data

TABLE 3-9.6. ANSWER-BACK MEMORY TRIGGER-DELAY CHART, RESISTOR OPTIONS

Delay	Install 10Ω, 0.25 W Resistor[1]	Between
10.24 sec	R15	J10 and J16
5.12 sec	R16	J9 and J14
2.56 sec	R17	J8 and J1
1.28 sec	R18[2]	J7 and J15
640 msec	R19	J6 and J17
320 msec	R20	J5 and J15
160 msec	R21	J4 and J14
80 msec	R22	J3 and J1
0.6-1.9 msec	R23	J2 and J16

NOTES
1. Only one of R15 through R23 is used.
2. Resistor normally installed.

TABLE 3-9.7. AUTO ANSWER CONTROL INTERFACE SELECTION CHART, RESISTOR OPTIONS

Install 10Ω, 0.25W Resistor	Between	For Use With DAA	For Use With BELL 103
R1	J12 and J18	Open	10Ω
R2*	J13 and J11	10Ω	Open

*Resistor normally installed.

terminal function (RECORD, PLAYBACK and/or PRINTER) to the LINE mode, switch the data terminal to ON-LINE, and switch the Bell 103 Data Set to AUTO. A typical operating sequence (assuming that Answer-Back Memory and Remote Device Control options are installed) is shown in the following flow chart:

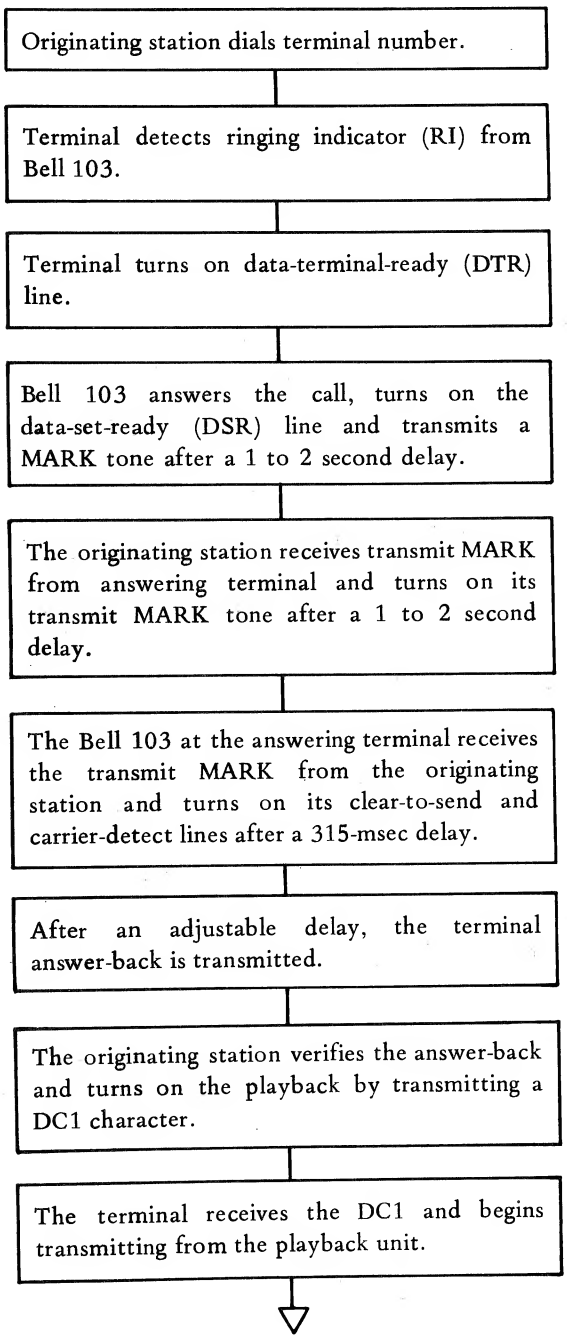

A flow diagram of the Auto Answer Control functions is shown in Figure 3-9.8, and state equations are listed in Table 3-9.9.

c. Interface Requirements

The Interface signals conform to EIA Standard RS232C. The interface connector is a 25-pin Cannon DB-25P (or equivalent) at the end of a 6 foot (minimum length) cable. Pin assignments and functions are shown in Table 3-9.10.

3-9.6.2 Auto Answer Control with Bell Type-CBS Data Access Arrangement. This version of the Auto Answer Control (TI Part No. 960984-0001), together with an "answer-mode" modem option, provides the capability of automatically answering a call on a Bell System DDD network which has a Bell type-CBS Data Access Arrangment. This version of the Auto Answer Kit plugs into PC card slot A7 in the 733 lower unit PC card rack.

All other general capabilities are the same as the Auto Answer Control version described in paragraph 3-9.6 above.

a. Indicators

The following indicators (located on the 733 option panel) are provided in the Auto Answer Control:

RING INDICATOR – lamp blinks 2 seconds on and 4 seconds off with the ring indicator of the Bell System DAA. It illuminates steadily after the call is answered [i.e., the off-hook (OH) line is turned on] until the carrier is received from the originating station.

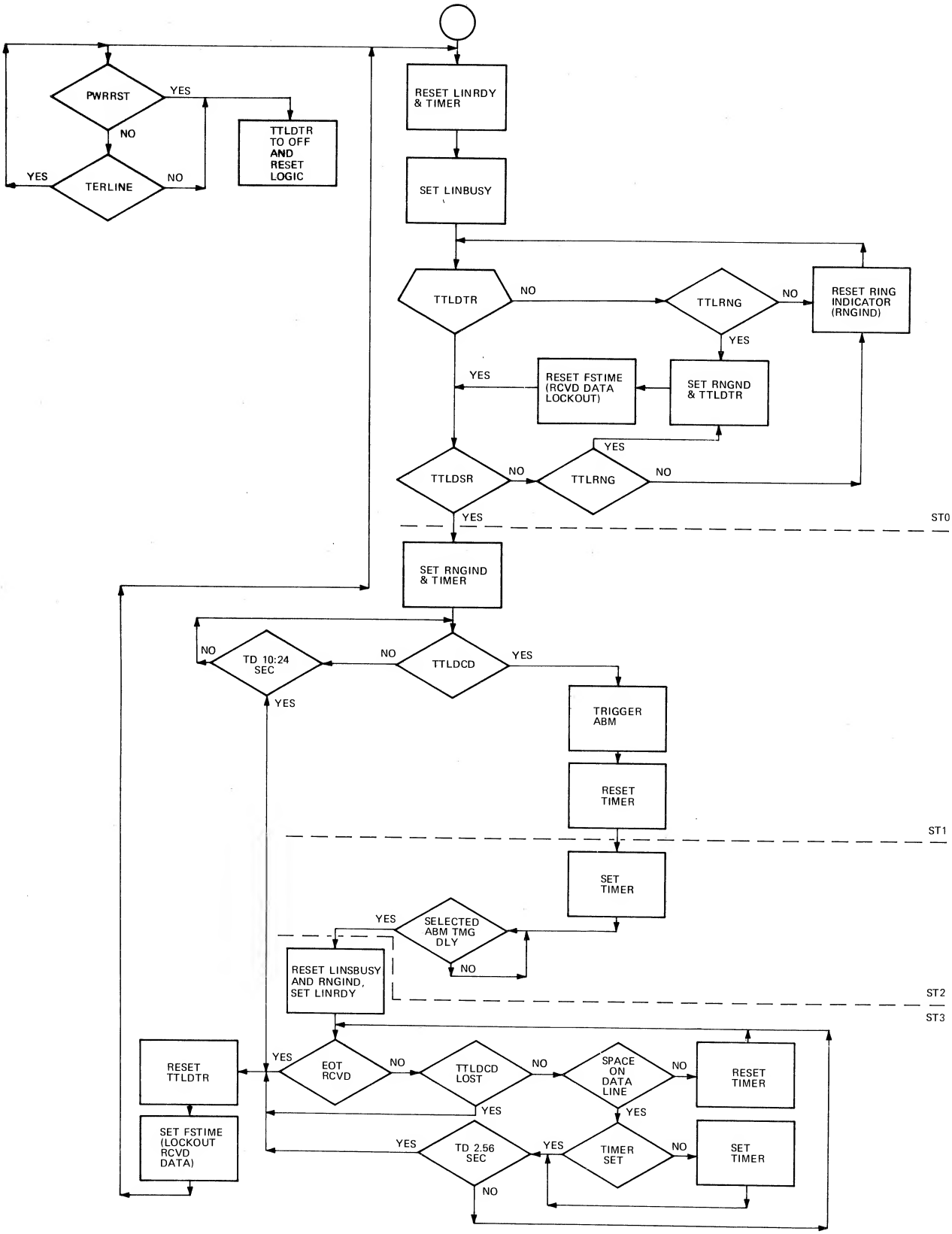

FIGURE 3-9.8. AUTO ANSWER CONTROL, FUNCTIONAL FLOW DIAGRAM

TABLE 3-9.8. AUTOMATIC DISCONNECT AND AUTOMATIC ANSWER-BACK MEMORY TRIGGERING, RESISTOR OPTIONS

To Disable	Delete 10Ω Resistor
Disconnect (hang-up) line upon receipt of EOT character	R5
Long-SPACE Disconnect	R3
Automatic Triggering of Answer-Back Memory	R12

TABLE 3-9.9. STATE EQUATIONS FOR AUTO ANSWER CONTROL

ST0D	=	ST1D– * ST2D– * ST3D–
ST1D	=	ST0Q * TTLDTR * TTLDSR + ST1Q * (TTLDCD– * TD10.24SEC–)
ST2D	=	ST1Q * TTLDCD + ST2Q * TD(xxx)msec–
ST3D	=	ST2Q * TD(xxx) MS + ST3Q * RCVEOT– * TTLDCD * TD1,28 Sec–
TIMERRST	=	ST0Q + ST1Q * TTLDCD + ST3 * LNDATAQ
TTLDTRD	=	TTLRNG + TTLDTR * ((ST1Q + ST3Q) * ST0D–)–
LINBUSY	=	ST3Q–
FSTIME	=	(ST1Q * TTLDCD) + TTLDTR–
AUX2ROF	=	TTLDTR–
TD1.28 SEC	=	ST3Q * LNDATAQ–* (1.28-sec delay time)
TD(xxx)MS	=	ST2Q * (SELECTED delay time)
TD10.24 SEC	=	ST1Q * TTLDCD– * (10.24 sec delay time)
T1MERRST	=	ST0Q + ST1Q * TTLDCD + ST3Q * LNDATAQ
STATE 0	=	Wait state, no call in progress
STATE 1	=	Received ring indication, answer call, and wait for carrier detect (trigger ABM when carrier detect is received)
STATE 2	=	Received carrier detect, wait for ABM delay
STATE 3	=	ABM delay over, send ABM and set line ready indicator

TABLE 3-9.10. AUTO ANSWER CONTROL PIN ASSIGNMENTS WITH BELL 103 DATA SET (CABLE, TI PART NO. 971555-0001)

Bell 103 Data Set Interface Conn Pin No.	Terminal Conn (J1) Pin No.	Signal Source	Signal Function
1	A	Common	AA – Protective Ground
2	H	Terminal	BA – Transmitted Data
3	10	Data Set	BB – Received Data
5	8	Data Set	CB – Clear-to-Send
6	9	Data Set	CC – Data-Set-Ready
7	7	Common	AB – Signal Ground
8	K	Data Set	CF – Carrier Detect
20	E	Terminal	CD – Data-Terminal-Ready
22	D	Data Set	CE – Ringing Indicator
(All other pins not used)			

TABLE 3-9.11. AUTO ANSWER CONTROL PIN ASSIGNMENTS WITH BELL TYPE-CBS DATA ACCESS ARRANGEMENT (CABLE, TI PART NO. 971557-0001)

Terminal Conn (J1) Pin No.	DAA Terminal Lugs	Wire Color	Bell Systems Description	Function
C	DT	Orange	Data Tip	Connection to phone line
3	DR	Yellow	Data Ring	Connection to phone line
6	DA	Brown	Data Transmission	Held ON by terminal to request data transmission
E	OH	Red	Off Hook	Held ON by terminal to answer and maintain a call
5	CCT	White	Coupler Cut Through	Held ON by DAA when data path has been established
4	SH	Blue	Switch Hook	Not used by terminal
	SH1		Switch Hook Return	Not used by terminal
7	SG	Black	Signal Ground	Return path for control signals
D	RI	Green	Ring Indicator	Ringing signal present

TERMINAL READY – illuminates when the 733 ON LINE switch is ON-LINE, indicating that the terminal will answer an incoming call.

LINE READY – illuminates when the terminal has answered the call, received the carrier from the originating station and is ready to transmit or receive.

b. Typical Operations

Before leaving the terminal unattended, the operator must switch the appropriate data terminal function (RECORD, PLAYBACK and/or PRINTER) to the LINE mode and the data terminal to ON-LINE. A typical operating sequence (with Answer-Back Memory and Remote Device Control options installed) is shown in the following flow chart.

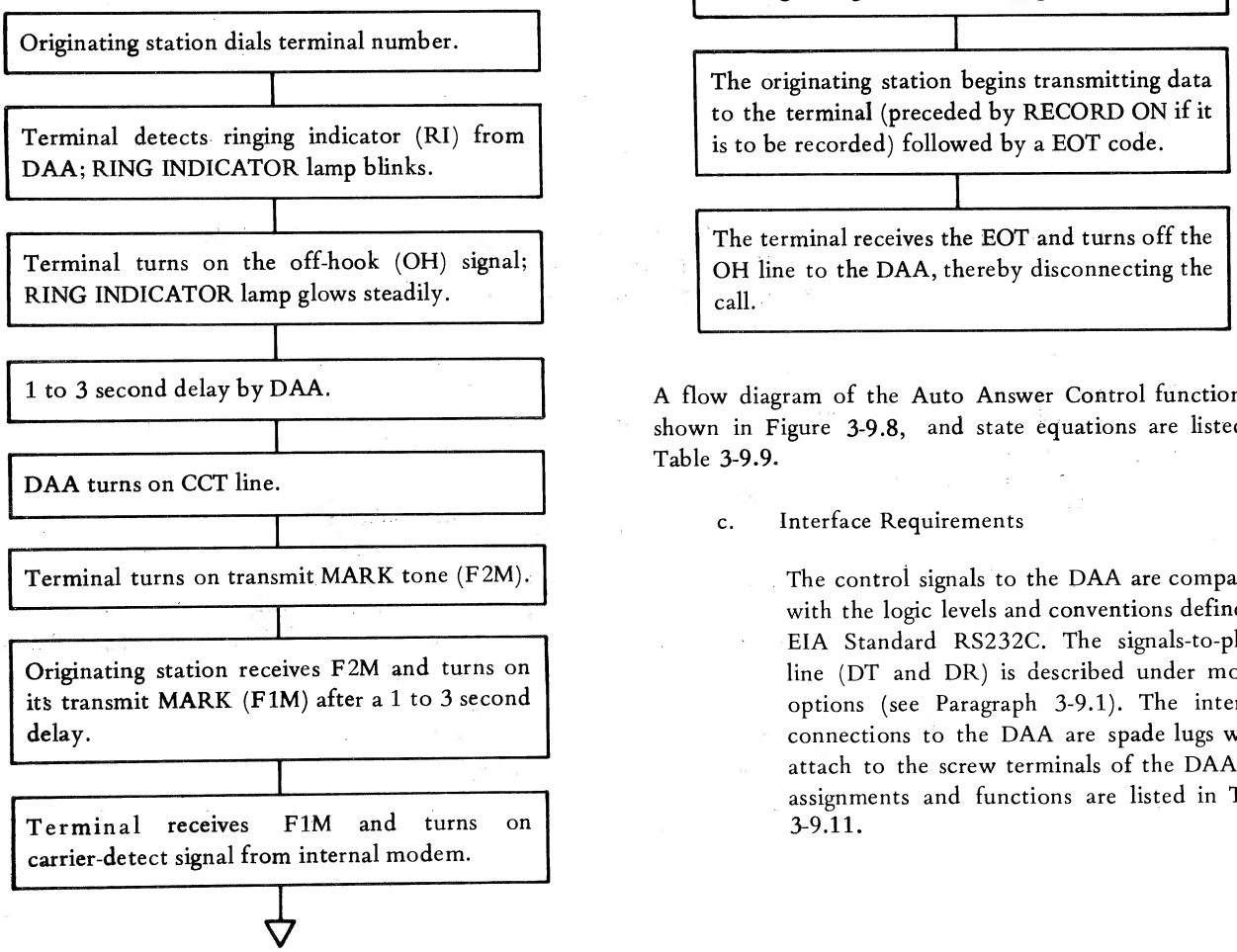

A flow diagram of the Auto Answer Control functions is shown in Figure 3-9.8, and state equations are listed in Table 3-9.9.

c. Interface Requirements

The control signals to the DAA are compatible with the logic levels and conventions defined in EIA Standard RS232C. The signals-to-phone line (DT and DR) is described under modem options (see Paragraph 3-9.1). The interface connections to the DAA are spade lugs which attach to the screw terminals of the DAA. Pin assignments and functions are listed in Table 3-9.11.

3-9.7 AUTOMATIC SEARCH CONTROL. The Automatic Search Control (ASC) option provides the capability to automatically search at high speed for a desired record contained within a tape cassette. Schematics [971500(M/L) or 971503(M/W)] of the ASC are contained in Appendix C. Signatures are listed in Appendix A.

As shown in Figure 3-9.9, the operator (or remote device if used in conjunction with the Remote Device Control option) enters an activate code on the ASR data bus through the keyboard (or over the remote line). The ASC recognizes the code and if in local mode responds locally by causing a paper advance (KBPA) signal. The printer performs a line feed and a carriage return. The operator (or remote device) can then enter from one to 16 printable USASCII characters into the search field memory of the Automatic Search Control. After the 16th character is entered into memory, the printer is switched off via PRNROFF.

The ASC waits for the cassette to be activated and then writes N-1 characters (one less than entered by keyboard or line) into its cassette data memory. When the cassette data memory is loaded, a character-by-character comparison begins. The ASC then compares up to N-1 characters at which time the ASC waits for one more character from the tape to complete the sequence. If the N-1 field comparison is positive (N-1 matches) and the last character [(N-1)+1] is a match, the ASC stops the cassette and issues a paper advance signal if the data terminal is in local mode. If the fields do not compare, the ASC will shift the cassette data memory data by one character and begin an N-1 compare again.

The read-only memory (ROM) controller is the heart of the Automatic Search Control. The ROM has three basic functions: data path control, data timing and decoding, and logic control.

3-9.7.1 Data Path. The data path begins at the ASR data bus. The ASC converts the serial data to parallel which is applied to the input of the decoders and to the 8-bit parallel buffer register. The output of the buffer register is applied to both the search field memory and the cassette data memory where, at the appropriate time, a write pulse is applied to one of the two memories (16 x 8 bit) to load that character.

The outputs of the memories are continuously fed to two 8-bit magnitude comparators which determine equality. During the character-by-character tape search, the two comparators signify a match.

3-9.7.2 Data Timing and Decoding. Data timing (see Figure 3-9.10) is accomplished by synching the ASC to Terminal Control through two signals: device-enable and terminal control state-ONE. The device-enable determines when a data transfer will take place. The enables are

KBDENA – keyboard data
RDRENA – cassette data playback
RMTENA – line data, generated by the RDC.

Terminal control state-ONE (TCST1) indicates when the data transfer is complete. The data is actually transferred by the serial clock (SCLK). The flipflop CHRDY sets when the correct enable is up, the eight serial clocks have passed, and the falling edge of TCST1 occurs. At this point in the data path, the data is stable, so the outputs of the decoders are inspected for

Printable characters
Activate code (ESC and $).

If the character is printable, a signal (CHROK) is sent to logic control to signify that the character is ready and printable.

3-9.7.3 Logic Control. The logic control performs two primary functions: state control and function control.

a. State Control – State Control is implemented in three basic steps: (1) defining the step-by-step sequence in which the controller operates; (2) storing the steps into a permanent read-only memory (ROM) to be recalled later in a predetermined sequence; and (3) implementing the ROM control to assign each step or memory cell to a specific forcing function.

   The flow chart (Figure 3-9.11) and block diagram (Figure 3-9.12) illustrate the concept. The diamonds on the flow chart represent forcing functions; the rectangles are control functions; and the connecting lines are jump paths. For example, note that state 11 (state numbers are written in each block) has three jump paths (J0, J1, J2) and two forcing functions (STOP BIT and MATCH). The dominant forcing function is STOP BIT which determines the primary decision regardless of MATCH. If STOP BIT is true, the memory output forces the state counter to address 10; if it is false, MATCH determines whether address OF or OE is forced.

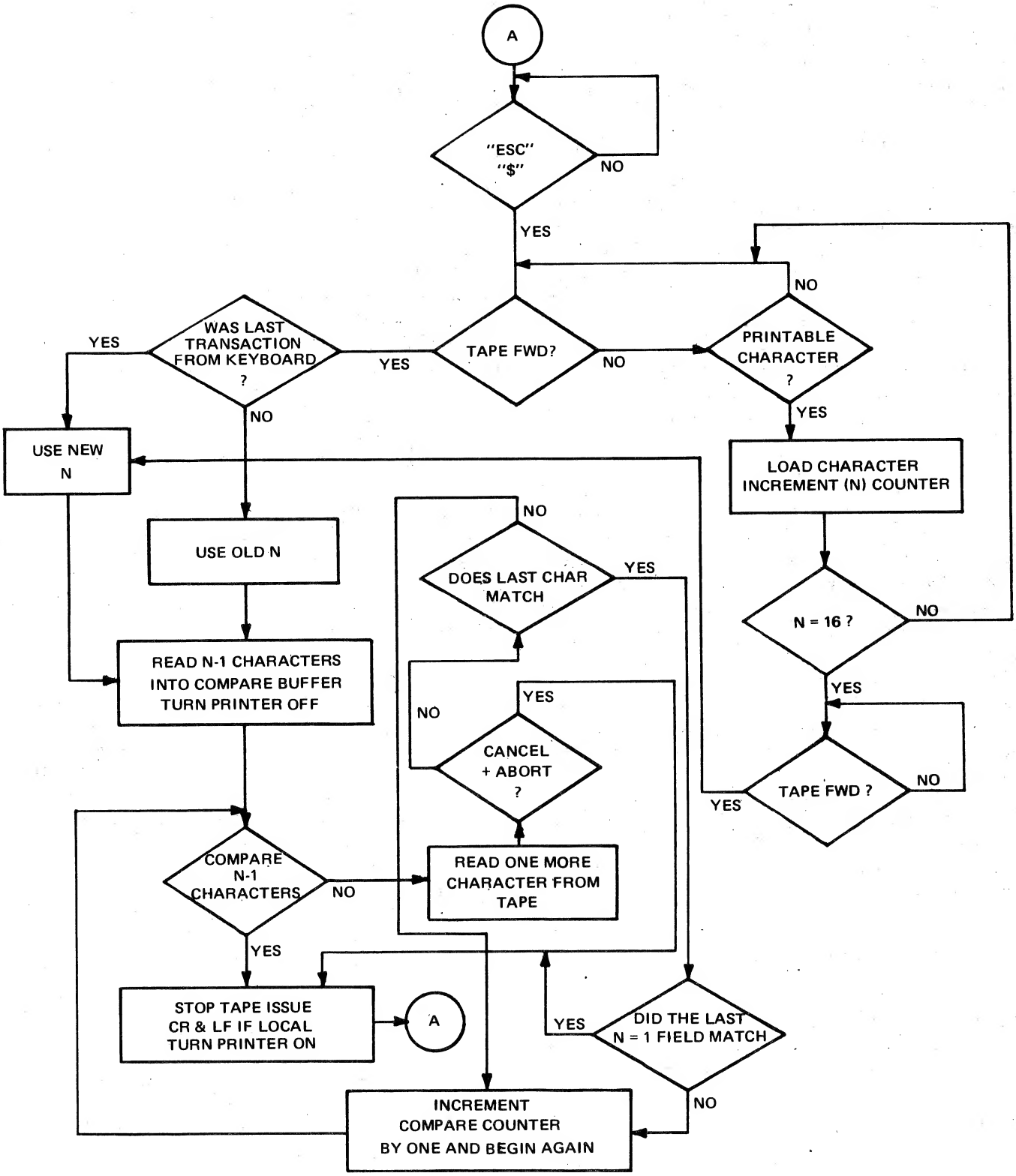

FIGURE 3-9.9. AUTOMATIC SEARCH CONTROL SIMPLIFIED FLOW CHART

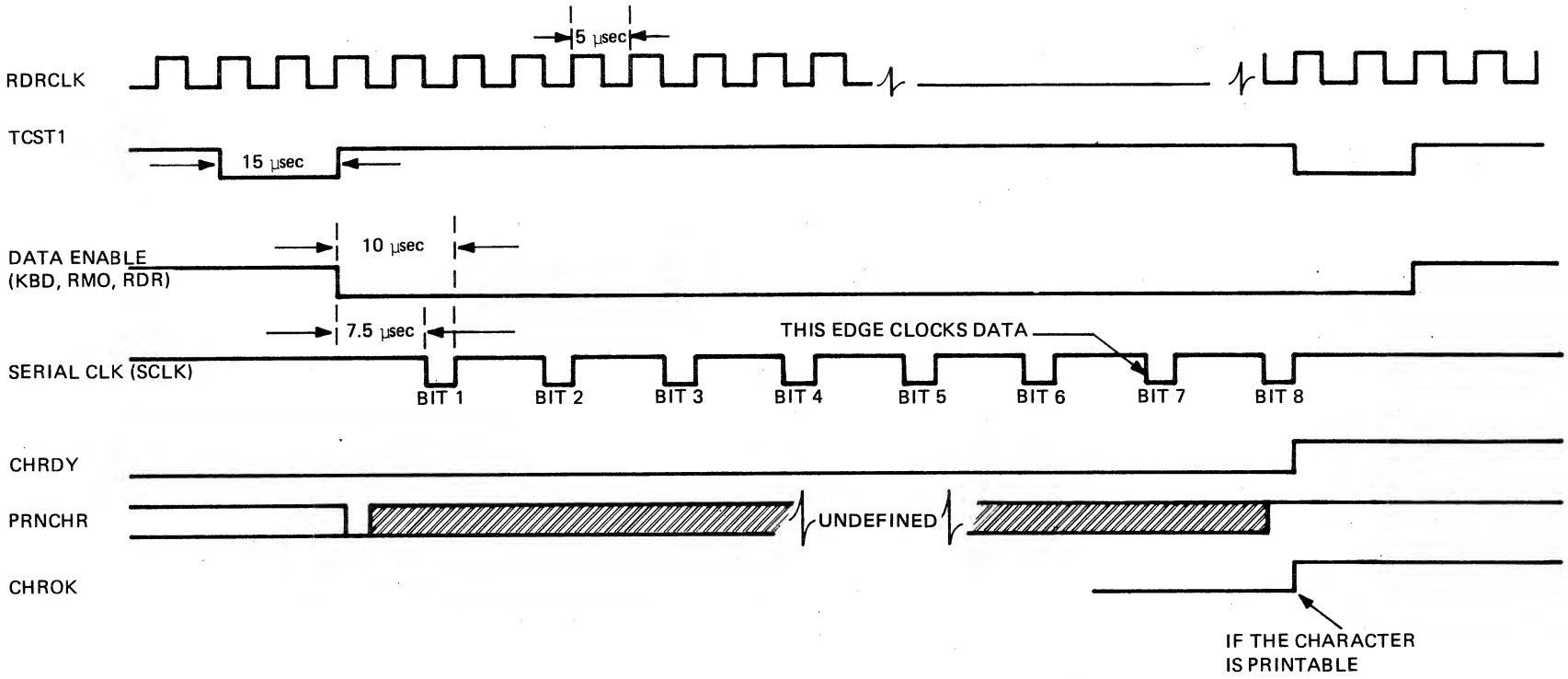

FIGURE 3-9.10. AUTOMATIC SEARCH CONTROL DATA TIMING

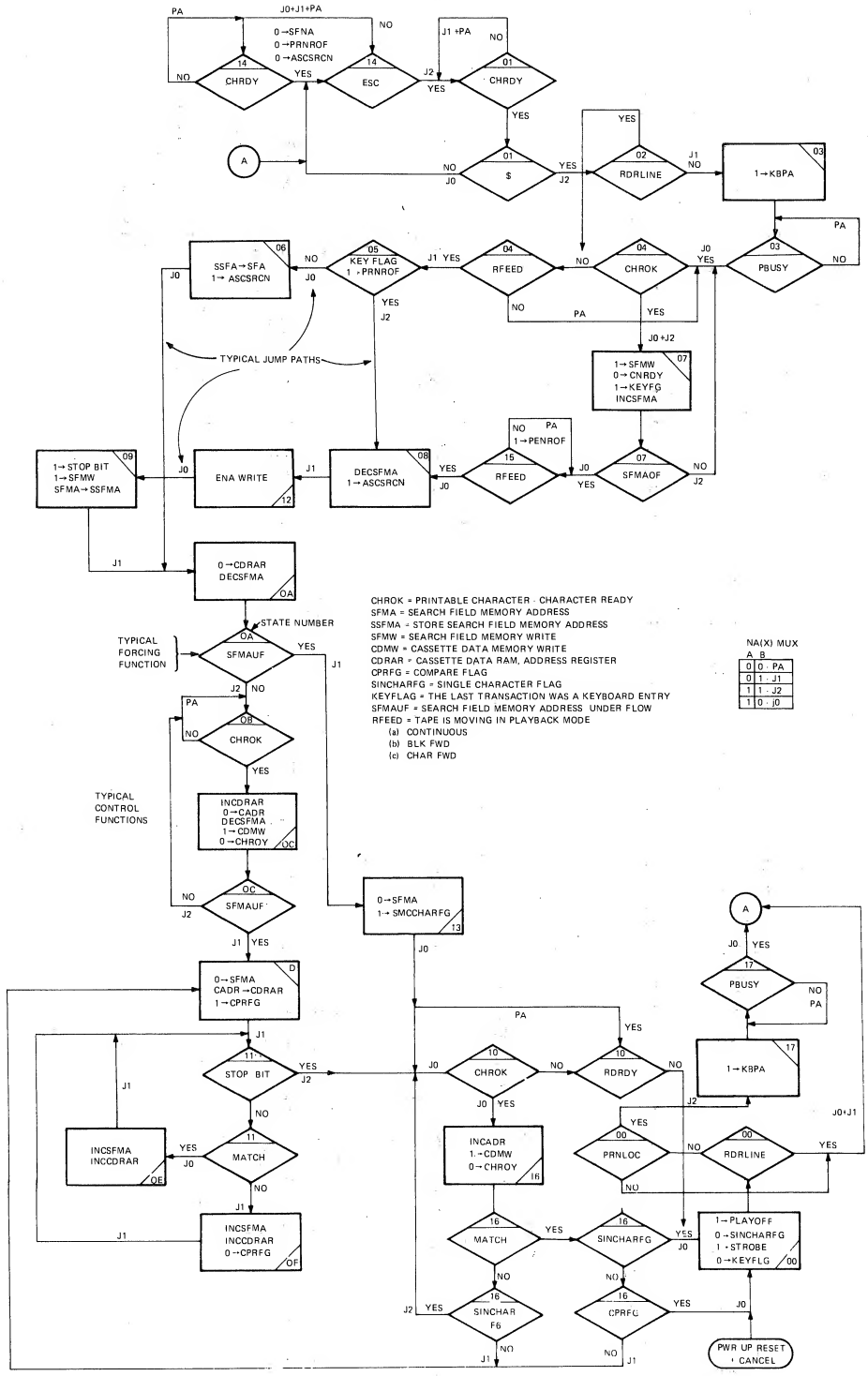

FIGURE 3-9.11. AUTOMATIC SEARCH CONTROL FUNCTIONAL FLOW DIAGRAM

Thus, address 11 has three possible next address jump paths: J0 = OE, J1 = OF, and J2 = 10. The method by which they are chosen is determined by the conditions of the forcing functions STOP BIT and MATCH when the clock switches.

The forcing functions are selected by a 2-bit wide, 24-position multiplexer. The multiplexer consists of three sections of two (8 → 1) multiplexers, which are separated into two control bits: A and B. When, for example, address ZERO is applied to the multiplexer, AAM slot-zero is switched to a three-input OR gate (SELA); and BAM multiplexer slot ZERO is switched to a three-input OR gate (SELB).

SELA and SELB are coded into a 2-bit field to select the jump paths. Actually, there are four jump paths: J0, J1, J2, and PA (present address). However, PA is not stored in memory since it is available at the output of the memory address register. A truth table for these four jump paths is shown below.

Bit A	Bit B	PATH
0	0	PA
0	1	J1
1	1	J2
1	0	J0

The A/B bits are applied to the next address (NAM-NEM) selectors which are 4 → 1 multiplexers. The outputs of these selectors are applied to the inputs of the memory address register (NAA-NAE) the output of which is fed to the five ROM's.

b. Function Control. The function controls operate much the same way as the state control. The control lines needed to make things happen (clock counters, operators, reset flipflops and control data path) are well defined in Figure 3-9.11. The control line functions are stored in the control ROM to be used where appropriate. Each control line is a discrete line from a ROM to the particular device to be clocked or gated, and each line is preprogrammed to switch HIGH or LOW in those states shown in Figure 3-9.11.

The flow chart in Figure 3-9.11 shows that state 11 can step to any of three states: 10 via path J2, OF via J1, and OE via J0. As the controller steps through one of these states, it must perform its assigned task. The following control functions occur each time the controller passes through the noted states.

State	Transfer Function (Control Function)
OE	Increment SF memory address (INCSFMA)
	Increment Cassette Data RAM address register (INCDRAR)
OF	INCSFMA
	INCDRAR
	Clear the compare flag (0 → CPRFG)
10	Wait for diamond decisions

3-9.8 REMOTE DEVICE CONTROL. The optional Remote Device Control (RDC) consists of a single printed-circuit card which plugs into KSR card slot A6. A manual ON/OFF switch for the RDC is located atop the PC card, accessible by lifting the terminal cover. Schematics of the RDC [971499(M/L) and 971504(M/W)] are contained in Appendix C.

The RDC permits remote control of most 733 ASR operations via data received over the communication line. The RDC decodes and acts upon on-line data in the form of ASCII character and control codes.

3-9.8.1 Function Codes. All functions are performed by the RDC upon receipt of specific ASCII characters which are established by a programmable read-only memory (PROM) and an option resistor on the RDC PC card. Five functions are performed with single characters from the USASCII control character subset. All other functions are performed using a sequence of two USASCII characters: the first character is derived from the control character subset; the second character is derived from either the control character subset or the third and fourth columns of the USASCII code (see Table 3-4.2), as selected by the option resistor.

NOTE

Once a function is selected in one of the two subsets, all other functions are contained in the same subset.

The standard function code selections are listed below.

a. Single-Character Functions

Playback ON	DC1
Playback OFF	DC3
Record ON	DC2
Record OFF	DC4

Autodisconnect (when used) with Auto Answer Control option – EOT

First character of double-character sequence – (normally DLE)

b. Two-Character Functions – These functions are performed using the USASCII control character DLE plus the following character

Rewind cassette-1	1
Rewind cassette-2	2
Load cassette-1	3
Load cassette-2	4
Cassette-1 in RECORD mode	5
Cassette-2 in RECORD mode	6
Block forward	7
Block reverse	8
Printer ON	9
Printer OFF	0
Auto Device Control ON	:
Auto Device Control OFF	;
Request status	<
1200-baud print local	>
ASC remote cancel	?

NOTE

The printer is automatically disabled from printing the first character following receipt of the DLE character.

c. Function Description

Playback On – enables the tape playback function

Playback Off – disables the tape playback function

Record On – enables the tape recording function.

Record Off – disables the tape recording function.

Auto Disconnect (EOT) – disconnects the printing and recording functions from on-line (if used in conjunction with Auto Answer Control option).

Rewind Cassette 1 – causes the tape in cassette-1 to slew at high speed toward the beginning of tape until clear leader is sensed.

Rewind Cassette 2 – causes the tape in cassette-2 to slew at high speed toward the beginning of tape until clear leader is sensed.

Load Cassette 1* – causes the tape in cassette-1 to wind forward from clear leader to the beginning of tape.

Load Cassette 2* – causes the tape in cassette-2 to wind forward from clear leader to the beginning of tape.

Cassette-1 in Record Mode – places cassette-1 in RECORD mode; cassette-2 will be in PLAYBACK mode (dual-cassette models).

*If the tape cassette is not on clear leader (i.e., it is on tape), a fast forward will initiate. A fast forward cannot be stopped by a remote command.

Cassette-2 in Record Mode – places cassette-2 in RECORD mode (dual-cassette models); cassette-1 will be in PLAYBACK mode (all models).

Block Forward – causes the next block on tape to be read and played back (or the remainder of a block if playback stopped in the middle of a block).

Block Reverse – causes the tape to reverse one block and stop.

Printer On – enables the printer to receive data from the communications line (if the PRINTER switch is set to LINE) after having been disabled.

Printer Off – disables the printer from receiving line data. If this code sequence is received when the printer is in either the LINE or LOCAL mode, the printer is disabled while in the LINE mode. This function is reset and reverts to the Printer-ON condition when the terminal is switched OFF-LINE or when power is switched OFF and ON.

Auto Device Control ON – enables the functions playback ON/OFF (DC1, DC3) and record ON/OFF (DC2, DC4) after having been disabled by the Auto Device control OFF function.

Auto Device Control OFF – disables the functions playback ON/OFF (DC1, DC3) and record ON/OFF (DC2, DC4), which is particularly useful when recording data from the line containing the playback ON/OFF or record ON/OFF characters (e.g., format tapes). ADC OFF is reset and reverts back to the ON condition when the terminal is switched OFF LINE, or power is switched OFF and ON.

Request Status – enables the terminal to send the status character (see below). It is particularly useful in determining when a rewind, load, or other function has been completed.

3-9.8.2 Status Character. The status character is a USASCII character transmitted by the data terminal when the "request-status" code is received from the line. The specific status and bit locations are

Bit 1 (least significant bit) indicates the playback function is ready when bit 1 is a logic ONE. If bit 1 is a logic ZERO, playback is NOT ready for one of the following reasons:

(1) Cassette door open or cassette not in place

(2) Cassette on clear leader

(3) Playback not in LINE mode

(4) Other operations being performed; e.g., rewind.

Bit 2 – indicates a playback error has been made if bit 2 is a logic ONE. A logic ZERO indicates a playback error has not been made. If the playback is strapped so as not to stop on an error (see paragraph 2-6.2), bit 2 will indicate a ONE only while a block with an error is being (or waiting to be) transmitted.

NOTE

A playback error may be cleared using the remote control functions PLAYBACK ON, BLOCK REV, or BLOCK FWD.

Bit 3 – indicates cassette 1 is on clear leader at either end of tape if Bit 3 is a logic ONE. A logic ZERO indicates the cassette is not on clear leader.

Bit 4 – same function as bit 3 for cassette 2.

Bit 5 – indicates that the record function is ready to be enabled with the record ON signal when bit 5 is a logic ONE. If bit 5 is a logic ZERO, record is not ready for one of the following reasons:

(1) Cassette-door-open or cassette-not-in-place

(2) Cassette on clear leader

(3) Record not in LINE mode

(4) Other operation being performed; i.e., rewind or load

(5) Tape cassette write tab removed.

Bit 6 – indicates that the printer is ready when bit 6 is a logic ONE. If bit 6 is a logic ZERO, the printer is not ready for one of the following reasons:

(1) Printer not in LINE mode

(2) Printer is off as a result of "printer off" command, or the Automatic Search Control (ASC) is searching.

Bit 7 – always a logic ONE to force the status character out of the control character subset. This bit may be optionally switched on the PC card to indicate PLAYBACK-ON status (see Table 3-9.12). In this case a logic ZERO indicates playback is on (i.e., playback either reading tape or transmitting data) and a logic ONE indicates playback is not on. Bit 7 is particularly helpful in determining when the ASC is searching tape and when the search is completed. If bit 7 is used, the status character is not excluded from the control character subset.

EXAMPLE

If playback is ready, a playback error has not been made, cassette-1 is not on clear leader, cassette-2 is on clear leader, record is not ready, and printer is ready, the status character would be

b_1 – ONE
b_2 – ZERO
b_3 – ZERO
b_4 – ONE
b_5 – ZERO
b_6 – ONE
} = USASCII character "i"
b_7 – ONE (strapped to logic ONE)

3-9.8.3 Function Operating Modes. The remote control functions are performed when the appropriate codes are contained in the transmitted, received, and/or local data as described in the following paragraphs.

a. Playback On/Off – The playback-OFF function is performed on transmitted, received, or local data. It may be disabled in any one or all modes using pencil switch S-2 on the RDC PC card as shown in Table 3-9.12. The playback ON function is performed on only received or local data; it too may be disabled using the pencil switch.

b. Record On/Off – The record ON/OFF function is performed only on received or local data. It may be disabled on received and/or local data via the pencil switch as shown in Table 3-9.12.

c. Manual Function Disable Control – A switch located atop the RDC PC card permits switching off all functions except the auto-disconnect function EOT character when used with the Auto Answer Control option.

d. Other Functions – All other functions are enabled only on received data.

3-9.8.4 Additional RDC Card Options.

a. Remote Search (with ASC Option) – The RDC permits remote initiation of the optional Automatic Search Control (ASC) from the communication line. The initiation sequence to the ASC is enabled if PLAYBACK is set to LINE, the cassette is ready and the RDC is ON. Once search is started, the same conditions are also required for the ASC remote cancel code to be acted on. If these conditions are met and the double-character ASC remote cancel code is received from the line, the RDC will send a search cancel signal to the ASC. Status may be requested from the controlling device any time during the search. The on-line search speed is always 320 characters per second. No on-line tape duplication during search is possible.

During an on-line search, the DC3 (PLAYBACK OFF) control character will be ignored if encountered. No data is transmitted during an on-line search except status (if requested) or the CAN character if a playback error occurs, and the CAN character is enabled.

b. Automatic ASCII "CAN" character on Playback Error – If this switch-selectable option is set on the RDC, the ASCII CAN character will be automatically transmitted to the line whenever a read error is detected during playback. The conditions required for sending an automatic indication of an error are

(1) Playback must be on-line and ready.

(2) The RDC PC card must be ON.

(3) A playback error must be detected by the playback controller.

This switch-selectable option (S-2, position 7) is normally open, which disables automatic transmission of the CAN character on a playback error.

TABLE 3-9.12. RDC PC CARD SWITCH S2 OPTIONS

Switch S2 Position	Function	Data Source	Normal Switch State
1	Record ON/OFF	Local data	
2	Record ON/OFF	Received data	
3	Playback ON/OFF	Local data	ON
4	Playback ON/OFF	Received data	
5	Playback OFF	Transmitted data	
6	Playback-ON Status	N/A	OFF
7	CANcel character on read error	N/A	

TABLE 3-9.13. REMOTE DEVICE CONTROL CODE BITS FOR ASR (UPPER UNIT) FUNCTIONS

Code Bits					Decoded Signal	Function
1	2	3	4	Strobe		
1	1	1	1	1	RDRON	Playback On (DC1)
0	1	1	1	1	RDROF	Playback Off (DC3)
1	0	1	1	1	RCDON	Record On (DC2)
0	0	1	1	1	RCDOF	Record Off (DC4)
1	1	0	1	1	XREW1	Rewind Cassette-1
0	1	0	1	1	XREW2	Rewind Cassette-2
1	0	0	1	1	XLD/FW1	Load or F/FWD Cassette-1
0	0	0	1	1	XLD/FW2	Load or F/FWD Cassette-2
1	1	1	0	1	XBSPFW	Block Forward
0	1	1	0	1	XBSPRV	Block Reverse
1	0	1	0	1	XC1RCD	Cassette-1 Record
0	0	1	0	1	XC2RCD	Cassette-2 Record
1	1	0	0	1	XRCHFW	Send One Character
0	1	0	0	1	XCA1STP	Cassette-1 Stop
1	0	0	0	1	XCA2STP	Cassette-2 Stop
0	0	0	0	1	Unused	

c. Footswitch for Local Playback-ON – This feature on the RDC permits use of a footswitch which closes a contact to ground to initiate the playback-ON function. Conditions required for enabling the footswitch are

(1) Playback must be local.

(2) The RDC card must be ON.

d. Rewind from the Right End – This feature on the RDC permits rewinding a tape cassette which is on clear leader at the right end of the tape; i.e., the takeup reel is full and the END lamp is illuminated. The only conditions required for this action are

(1) The cassette to be rewound is on clear leader.

(2) A rewind command for that cassette is issued.

NOTE

When a rewind from clear leader command is issued, no other RDC card functions can be used for 1.2 seconds.

e. 1200 Baud Print LOCAL – Not normally installed, this option provides a decoded output for use by the 1200-baud Transmit/Receive PC card with Auto Answer Control to perform the 1200-baud print-local function. The 1200-baud print local command is a standard two-character decode, activated when the command is received from the communication line.

f. Printer On/Off Command with DC2 and DC4 – The standard printer-ON/OFF commands are normally two-character codes. If the RDC incorporates this single-character option, the printer-OFF command may be initiated by the single ASCII DC2 (record-ON) character rather than the double-character sequence of DLE and 0 (zero). Similiarly, the printer-ON command may be initiated by the single ASCII DC4 (record-OFF) character rather than the double-character sequence of DLE and 9. With this option the standard double-character printer ON/OFF commands are ignored by the RDC. This option is normally not installed on the RDC. If used, the rewind from-right-end feature described in paragraph d. above is not possible.

3-9.8.5 Theory of Operation. The optional Remote Device Control (RDC) has two main functions:

(1) Decoding characters from the serial data bus and causing initiation of the appropriate action for that code or code sequence

(2) Performing certain additional on-line or local functions, including the footswitch pedal option, automatic sending of the ASCII CAN character upon detecting a playback error, 1200-baud print-local option remote search option (with the Automatic Search Control), and rewind the tape cassette from the right-end option.

a. Character decoding from the serial data bus – The RDC monitors the serial data bus at all times and decodes those characters selected to perform certain functions. Data from the serial bus is clocked into an input register on each set of eight system clocks (SCLK-). The last 2 bits of the ASCII character (bit 6 and bit 7) are then decoded to indicate that the character is either in columns 1 and 2 (control characters) of the ASCII code table (see Table 3-4.2) or in columns 3 and 4 (printable characters) of the ASCII code table. Bits 1 through 5 are then decoded by a read-only memory to indicate the character within the two columns selected.

The PROM is programmed to encode the input character (5 bits) into two sets of output lines. One set of three output lines indicates up to seven single-level decodes, and one set of five output lines indicates up to 16 double-level decodes. The output lines are then decoded by a three-line to eight-line single-character decoder and a four-line to 16-line double-character decoder into discrete lines which represent each function performed by the RDC.

If the first character of a double-character sequence (normally DLE) has not been received, only the single-character decoder will be enabled. When the double-character initiator is received from the line with a serial receiver enable (SRVENA-), a flipflop is set (ESCQ)

which enables the double-character decoder for received line data (i.e., that data on the bus during SRVENA-). It will stay enabled until the next character is received from the line. During this period the single-level decoder will still be enabled on transmitted data (during XMTENA-) and during local data transfer (on LOCDAT-). Once the second character of the double-character code is received from the line, the ESCQ flipflop is reset, the double-character decoder is disabled, and the single-character decoder is then re-enabled to line data (on SRVENA-). The ESCQ flipflop (when enabled) also disables the printer when it is on-line via the printer-remote-off (PRNROF-) line, so that the second character of the double-character sequence will not be printed.

All functions decoded which affect the ASR upper unit (record, playback, cassette motion control, or mode select) must be sent to the upper unit via a 4-bit code and a strobe pulse. When any line from either the single- or double-character decoder is low at time Q0 (TIMEQ0), the indication is clocked into a holding register until the next TIMEQO (88 μsec) at which time the present indication (REWIND CASSETTE-1, LOAD CASSETTE-2, etc.) is removed and the next indication, if any is clocked into the holding register (RDC timing is shown in Figure 3-9.12).

While the indication is in the holding register, the code bit encoder is putting the proper code bits (CDBIT1- through CDBIT4-) on the code bit lines going to the ASR upper unit. As shown in Table 3-9.13 the code bits are on the lines, a 5-μsec strobe (CDSTRB-) is issued at TIMEQ4, and the appropriate action is taken in the ASR upper unit. The strobe is a free-running clock from the timing generator on the PC card. The strobe bits are always issued for a function for 88 μsec starting from TIMEQ0 at the end of the enable on which the function was decoded until the next TIMEQ0.

The strobe is always issued at TIMEQ4 during each 88 μsec period of the timer generator (between TIMEQ0 times). The timer generator times are synchronized to terminal control via the terminal control state-ONE (TCST1) signal as shown in Figure 3-9.13. Therefore, all the times (TIMEQ0, TIMEQ6, etc.) always have the same relationship to the enables issued by terminal control.

The double-character functions can be decoded only from received data (SRVENA-), but the playback ON/OFF and record ON/OFF functions (PC1 through PC4) are optionally selectable using switches (S2) on the RDC PC card. This is done by enabling the single-character decoder output lines for these four functions into the holding register only if the appropriate switch is closed. For example, if the switch for enabling DC1 and DC3 is closed, both these inputs to the holding register are enabled for all local data on the bus. Local data is signified by the local data (DATLOC-) signal from terminal control.

Similarly, transmitted data is signified by the transmit enable (XMTENA-) signal and received data by the serial receiver enable (SRVENA-) signals from terminal control.

b. Additional RDC card line and local functions – The RDC performs several double-character or single-character decodes which do not affect the ASR upper unit and several optional functions. As a reference to all resistor and pencil switch options, see the RDC schematic (971504 or 971499) in Appendix C.

(1) Printer ON/OFF. When the printer-OFF code is received from the line, a latch (PRNOFQ) is set at TIMEQ0 which keeps the printer OFF via the PRNROF- line as long as the terminal is on-line. The latch is reset upon receiving the printer-ON code from the line or if the terminal is taken off-line or the RDC PC card is switched OFF. When the RDC card is off via the toggle switch on the PC card, all RDC functions are inhibited except decoding of the ASCII EOT character (used by Auto Answer Control to disconnect a call). The printer-OFF latch may be optionally resistor-strapped to be set/reset upon receiving from the line (SRVENA-) the single-level decoder DC2 and DC4 output lines, respectively. If this option is selected, the double-character decoder lines are not used. See the RDC

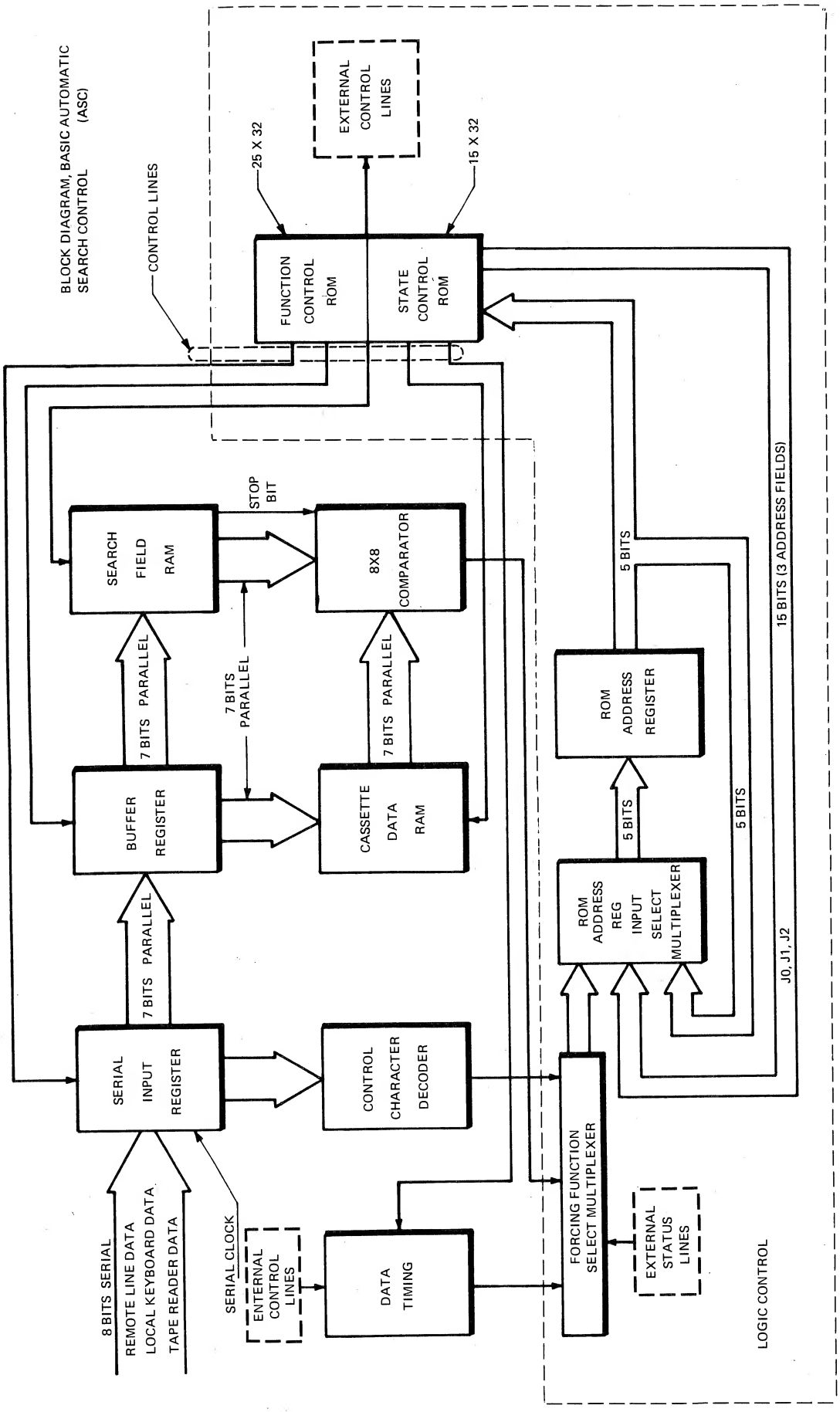

FIGURE 3-9.12. AUTOMATIC SEARCH CONTROL BLOCK DIAGRAM

schematic (971499) for a list of RDC card options and appropriate resistor straps.

(2) 1200-baud print LOCAL. A double-character decoder output line is provided for the 1200-baud print local option to use. This line is true only between the falling edge of the eighth system clock (SCLK-) for each SRVENA- and the rising edge of the TIMEQ0 signal (see the RDC timing diagram, Figure 3-9.13). The 1200-baud print-local option is described in paragraph 3-9.8.4.e.

(3) DC1-4 ON/OFF. Upon receipt of the double-character decoder DC1-to-4 OFF code, a latch is set at TIMEQ0 which inhibits the DC1 through DC4 codes from being acted upon when received from the line. This is done by gating out the SRVENA- signal going to the DC1-to-DC4 enabling option logic and switches, so that these functions cannot be strobed into the holding registers on a SRVENA- signal at timeQ0. The latch (DC1-4 OFFQ) is reset upon receipt of the DC1-4 ON code from the line or by switching the terminal off-line or by switching off the RDC OFF toggle switch.

(4) Status Request. Upon receipt of the status request code from the line, a status flipflop (STATUSQ) clocks in the state of the status (STAT-) output line from the double-character decoder at TIMEQ0. At TIMEQ5 an auxiliary-1 request (AUX1REQ-) is sent to terminal control, and at TIMEQ6 the status flipflop is cleared. When terminal control sends back an auxiliary-1-enable-to-send (AUX1ENAS-), the status is clocked from the status register on the RDC card to the transmitter and sent to the line as a 7-bit ASCII character. All bits of the status character are obtained from information on the KSR motherboard except the printer-off (PRNOFF-) indication which comes from the serial data bus during the status enable (STATUSENA-) time from terminal control.

The PRNOFF- bit is the eighth bit of the terminal status word and is clocked into a flipflop on the RDC PC card for use with the printer-local (PRNLOC-) and printer remote-off (PRNROF-) signals to provide the printer-ready bit of the status character sent to the line.

The seventh bit of the status character sent to the line is switch-selectable to be always a ONE (forces status character not to be a control character) or to indicate the playback-not-on (PBKON-) status. Examples of possible status indications which could be sent by the RDC on request, and the ASCII characters that the status would represent, are shown in Table 3-9.14.

(5) ASCII CAN character on playback error. The playback error status bit (RERROR) is monitored from an available KSR motherboard signal. When a playback error occurs, the RERROR indication is clocked into a register on the RDC PC card at TIMEQ0 (see RDC timing, Figure 3-9.13) and becomes RERRORQ. The RERRORQ signal going HIGH clocks a cancel/status flipflop (if the playback is on-line and ready and the OPTION switch is closed) which selects which data will be sent to the serial data bus on the next auxiliary-1-enable-to-send (AUX1ENAS-) signal from terminal control.

The data which goes to the data bus on the AUX1ENAS- signal comes from either the status register or the cancel-character register as selected by the flipflop. The playback error will be detected in a status-enable time period, and on the next TIMEQ5 time a request (AUX1REQ-) will be sent to terminal control to transmit the CAN character.

The cancel/status flipflop is reset during the CANRSTENA period at TIMEQO as shown in Figure3-9.13,and data sent after that will come from the status register until another playback error is detected. The CAN character option is inhibited by either opening the pencil switch (S2-7)

TABLE 3-9.14. REMOTE DEVICE CONTROL STATUS CODES AND CHARACTERS

Status Character	Status Code							
	Parity	High (ONE) or Playback OFF	Printer Ready (ONE)	Recorder Ready (ONE)	Clear Leader Cassette-2	Clear Leader Cassette-1	Playback Error (ONE)	Playback Ready (ONE)
	b 8	b 7	b 6	b 5	b 4	b 3	b 2	b 1
@	P	1	0	0	0	0	0	0
A	P	1	0	0	0	0	0	1
C	P	1	0	0	0	0	1	1
D	P	1	0	0	0	1	0	0
E	P	1	0	0	0	1	0	1
G	P	1	0	0	0	1	1	1
H	P	1	0	0	1	0	0	0
I	P	1	0	0	1	0	0	1
K	P	1	0	0	1	0	1	1
L	P	1	0	0	1	1	0	0
P	P	1	0	1	0	0	0	0
Q	P	1	0	1	0	0	0	1
S	P	1	0	1	0	0	1	1
T	P	1	0	1	0	1	0	0
X	P	1	0	1	1	0	0	0
SOH	P	0	0	0	0	0	0	1
ETX	P	0	0	0	0	0	1	1
ENQ	P	0	0	0	0	1	0	1
BEL	P	0	0	0	0	1	1	1
HT	P	0	0	0	1	0	0	1
VT	P	0	0	0	1	0	1	1
DC1	P	0	0	1	0	0	0	1
DC3	P	0	0	1	0	0	1	1

Status Character	Status Code							
	Parity	High (ONE) or Playback OFF	Printer Ready (ONE)	Recorder Ready (ONE)	Clear Leader Cassette-2	Clear Leader Cassette-1	Playback Error (ONE)	Playback Ready (ONE)
	b 8	b 7	b 6	b 5	b 4	b 3	b 2	b 1
\	P	1	1	0	0	0	0	0
a	P	1	1	0	0	0	0	1
c	P	1	1	0	0	0	1	1
d	P	1	1	0	0	1	0	0
e	P	1	1	0	0	1	0	1
g	P	1	1	0	0	1	1	1
h	P	1	1	0	1	0	0	0
i	P	1	1	0	1	0	0	1
k	P	1	1	0	1	0	1	1
l	P	1	1	0	1	1	0	0
p	P	1	1	1	0	0	0	0
q	P	1	1	1	0	0	0	1
s	P	1	1	1	0	0	1	1
t	P	1	1	1	0	1	0	0
x	P	1	1	1	1	0	0	0
!	P	0	1	0	0	0	0	1
=	P	0	1	0	0	0	1	1
%	P	0	1	0	0	1	0	1
/	P	0	1	0	0	1	1	1
)	P	0	1	0	1	0	0	1
+	P	0	1	0	1	0	1	1
1	P	0	1	1	0	0	0	1
3	P	0	1	1	0	0	1	1

@ P 0 1 0 0 0 0 0 0

*Bit 7 is normally held in the logic ONE state. If the playback-OFF indication option is used (S2-6 in ON position), a logic ONE indicates the playback function is OFF and a logic ZERO indicates the playback function is ON. When the playback-OFF option is used, some status characters may be control characters as indicated by the shaded characters in the table.

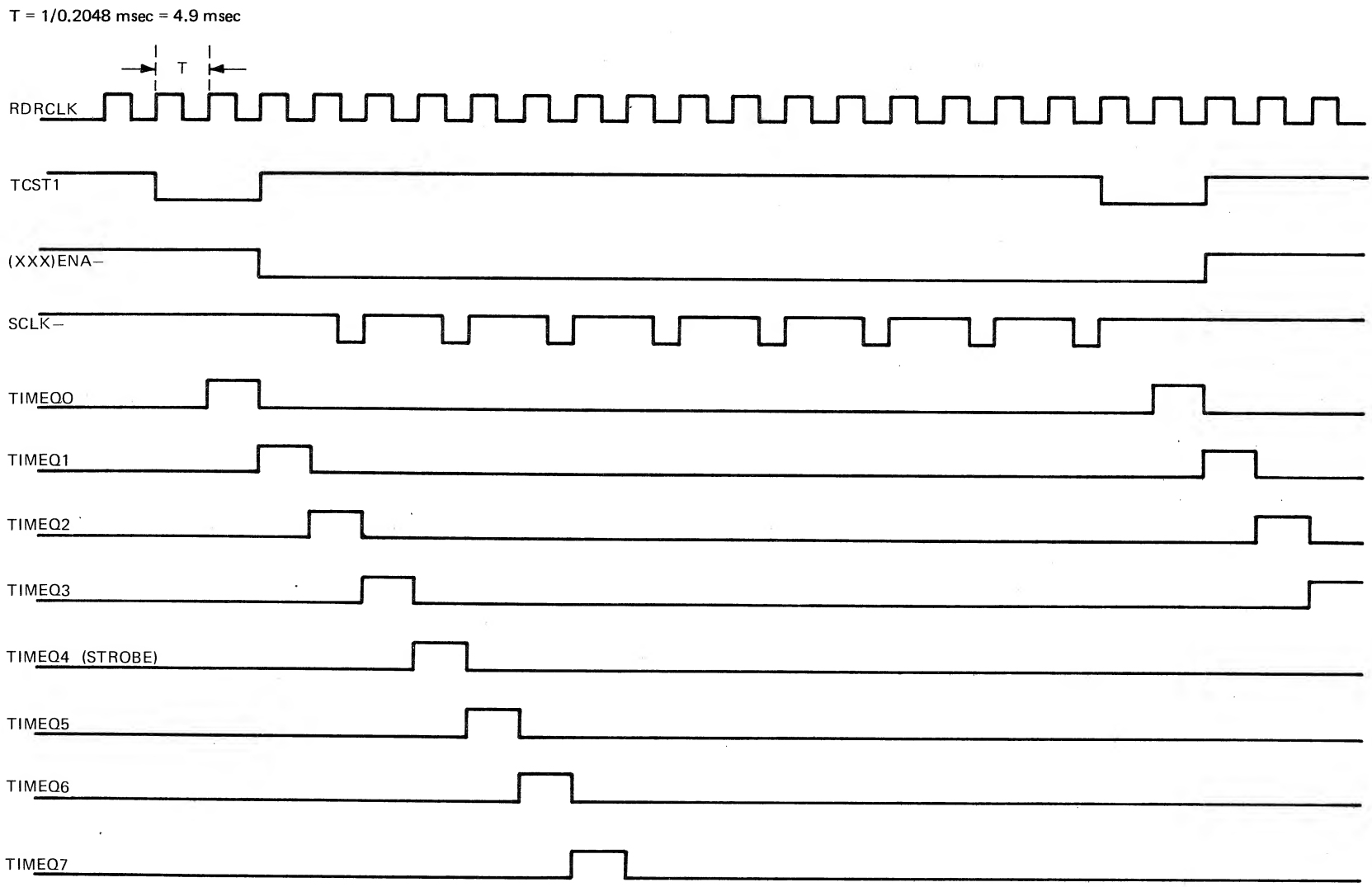

FIGURE 3-9.13. REMOTE DEVICE CONTROL TIMING DIAGRAM

for that option or by switching off the RDC PC card toggle switch.

(6) Footswitch option. A footswitch contact closure to ground is provided as an input to the RDC. The playback-ON (DC1) function can be initiated by footswitch if the PLAYBACK switch is set to LOCAL, and the cassette is loaded and ready. The footswitch provides a contact closure to ground with a switch bounce of 1 msec or less. (The TTL signal input is a low-going pulse, the width of which exceeds 1.25 msec).

The footswitch input is debounced by the C800 clock (1.25 msec period). When the footswitch is depressed, the debounce flipflop clocks the footswitch flipflop if the PLAYBACK is not set to LINE and the RDC card is ON. On the next status enable period at TIMEQ0, the playback-ON (DC1) function is clocked into the holding register and encoded to the 4 cassette data bits. When the DC1 function is issued (DC1Q), the footswitch flipflop is cleared until the next footswitch actuation. The footswitch input (FOOTSWITCH-) to the RDC is resistor-strappable to pin 28 (J2,L), or it may be hard-wire-strapped to any other RDC PC card output pin.

(7) Local/Remote Search Option (with optional Automatic Search Control). When the optional Automatic Search Control (ASC) is searching tape, the ASCSRCH- line is low. If the PLAYBACK switch is set to LOCAL, the SRCHLOC signal locks out the local data enable (DATLOC-) so that the RDC does not detect the DC1 through DC4 functions while the search is in progress. If the PLAYBACK switch is set to LINE, the SRCHLN signal locks out the transmit enable (XMTENA-) to the RDC so that it will not act on the DC3 function. As long as there is no auxiliary-1 enable to send (AUX1ENS-), such as a status request or CAN character transmission, the transmit inhibit line [XMTINH, Pin 31 (300 baud), Pin 33 (1200 baud)] is kept low so that the transmitter does not detect the transmit enables. Since no transmit enable is detected by the transmitter, it does not hold the line busy (LINBUSY-); therefore, the playback can send data at maximum search speed (320 characters per second). When the PLAYBACK is set to LINE and is ready and the RDC card is ON, the remote enable (RMTENA-) line to the ASC PC card is active. If the ASC initiate code is received from the line via a SRVENA- signal, the code is passed on to the ASC PC card through the RMTENA- line. Also, if PLAYBACK is set to LINE and is ready and the RDC PC card is ON, the double-character ASC cancel code, when received from the line, will cause an 88-μsec (TIMEQ0 to TIMEQ0) cancel signal to be sent to the ASC PC card via the remote cancel line (RMTCAN-) between the cards.

(8) Rewind From the Right End Option. The logic in the ASR upper unit tape motion controller is designed so that rewinding a tape from clear leader requires depressing and holding the REWIND switch for that cassette until the tape winds past clear leader and onto magnetic tape. The RDC PC card must simulate holding the REWIND switch depressed by holding the strobe line (CDSTRB-) low and keeping the rewind code on the cassette data lines until the tape has passed clear leader.

When the RDC logic senses that either cassette is on clear leader and a rewind command for that cassette is issued from the line, a oneshot timer is fired which holds the strobe low and disables the timing generator (TIMEQ0 generator) for 1 $\pm$0.2 seconds. By disabling the timing generator the rewind code just issued will remain in the holding register until the timing generator can again send a TIMEQ0 clock to remove it. The 1 second during which the strobe is held low is sufficient to ensure that the tape has passed clear leader on the right end.

If the tape is already rewound to clear leader on the left end, another rewind

command will have no effect on the tape but will still cause the 1-second disable oneshot to fire. Whenever the oneshot fires, the timing generator is disabled for 1 ±0.2 seconds. Since no timing is being generated, this action will cause the RDC to be disabled for that period of time; therefore, it cannot be used for any other function. Rewinding a tape which is not on clear leader does not cause the oneshot timer disable to fire; thus the RDC card is not disabled.

3-9.9 ACOUSTIC COUPLER. The Model 733 ASR, KSR, or RO Electronic Data Terminal may be equipped with an optional Acoustic Coupler which is compatible with a Bell 103A data set or equivalent. The coupler operates asynchronously up to a maximum speed of 303 baud in the full or half-duplex mode using standard dial telephone facilities. The Acoustic Coupler option is an originate-mode unit using transmit frequencies of 1270 Hz for MARK and 1070 Hz for SPACE and receive frequencies of 2225 Hz for MARK and 2025 Hz for SPACE.

The interface to the Acoustic Coupler is completed using a standard telephone handset. After the receive carrier frequency is present at the receiver for 3.6 to 6.5 seconds, the Model 733 Data Terminal is enabled to receive data, and the transmit carrier frequency is enabled.

The Acoustic Coupler contains all circuitry needed to convert logic signals from the terminal to audio signals for transmission over telephone lines. These circuits also convert audio signals to logic signals for transmission to terminal control circuits in the terminal. In addition, the Acoustic Coupler circuits supply carrier detect signals to the terminal control circuits to signify when the received data carrier has been received. The coupler provides the timing required for communication with two data sets at the other end of the line. The Acoustic Coupler is designed to provide reliable operation over the full range of received signals, even under high noise and low signal level conditions. Operation equals or exceeds the performance of the 103-type data sets in half duplex (110 baud) mode.

All circuitry is located on a single PC card which is easily removed for repair or replacement. Adjustment is not required, and all critical factory adjustments are sealed to prevent maladjustment.

SECTION IV

BASIC EQUIPMENT PC CARDS AND FUNCTIONS

4-1 GENERAL.

The following standard-equipment PC cards are installed in the ASR and KSR models as shown in Figures 4-1 and 4-2. Schematics for the PC cards are contained in Appendix C.

4-2 KSR (KEYBOARD) UNIT.

4-2.1 POWER MODULE MOTHERBOARD. The KSR motherboard provides interconnections between all other PC cards in the KSR section. Mounted on the motherboard are the power supply filter capacitors, the 5-volt crowbar SCR, and bleeder resistors for the filter capacitors. The keyboard, printer drive assembly, bell, power module, cassette system and output connectors plug into the power module motherboard.

4-2.2 REGULATOR/AMPLIFIER PC CARD. This PC card contains the motor drivers for the head-stepping and paper advance motors and the head-lift solenoid driver. This PC card also contains the 5-volt switching regulator.

4-2.3 CONTROL REGULATOR PC CARD. This PC card contains the power-on reset circuit and the positive 12-volt and negative 12-volt regulators. It also contains the auxiliary/reference 5-volt supply, the 5-volt regulator oscillator, the 5-volt regulator driver, and the 5-volt crowbar.

4-2.4 PRINTER CODE PC CARD (ASCII AND BAUDOT). This PC card contains the keyboard interface which converts parallel data from the keyboard to serial data for the data bus. It also contains the character generator which converts 8-bit data from the data bus to 35 bits for the printhead. The Printer Code PC card also decodes printer control characters. The printhead compensation and driver circuits are on this PC card along with the contrast adjustment and overvoltage protection for the printhead. The driver circuit for the bell is also on this PC card.

4-2.5 PRINTER CONTROL. The Printer Control PC card has the circuitry to step and damp the head, backspace the head, and lift the head. It includes a column counter and decoders to decode column 80, column 72 (end-of-line bell), and column 12 (carriage return brake). This PC card also contains the carriage return and carriage return brake circuits. Signals for line feed and paper advance are generated on this board. A switch is provided to change from single-line feed to double-line feed. The timing for the print pulse and the printer-busy signal is also generated on this PC card.

4-2.6 TERMINAL CONTROL. The Terminal Control PC card checks the status of all devices (line/local/off), accepts requests, and sets priorities. It uses the status and priorities to determine which devices receive enable signals. Terminal control generates these enables plus the eight clocks used to clock data to and from the data bus. Terminal control also generates the local-busy signal.

4-2.7 TRANSMIT/RECEIVE (ASCII OR BAUDOT CODE). The Transmitter/Receiver PC card contains the EIA interface circuits and the line receiver and transmitter. The ASCII receiver circuits receive data from the line at 10, 15, and 30 characters per second (CPS) or 50, 75, and 100 Baud for Baudot receivers, and clocks this data to the data bus with an enable and eight clocks from terminal control. The transmitter circuits on this PC card accept data from the data bus using an enable and eight clocks, add parity and START and STOP bits, and then clock this data to the line interface at the appropriate line speed. The SPEED switch (LO, MED, HIGH) is located on this card along with the FULL/HALF DUPLEX switch and the break circuit. The line-busy signal is generated on this card. This PC card also contains the crystal oscillator and countdown circuits which generate all master clocks used in the data terminal in addition to the receiver/transmitter clocks.

4-2.8 PRINTHEAD INTERFACE. The Printhead Interface PC card plugs into the Printer Code PC card and the printhead plugs into this card. It consists of a 35-bit serial-to-parallel converter and 35 buffers. The card accepts serial data from the character generator and converts it to parallel data and buffers for the printhead.

4-3 ASR MODULE (UPPER UNIT).

4-3.1 ASR MODULE MOTHERBOARD. The ASR motherboard connects all PC cards in the ASR unit with each other and with the tape transports. The motherboard is connected to the KSR motherboard through a 36-conductor cable.

4-3.2 DISPLAY PC CARD. The Display PC card contains the switches and indicators to operate the ASR. There are

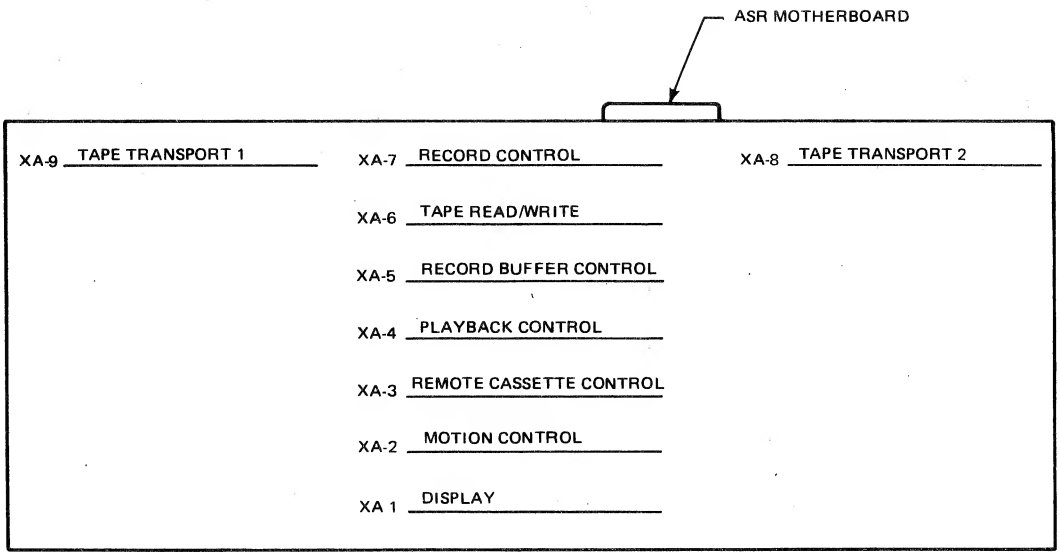

ASK MODULE ASSEMBLY (UPPER) PC CARD LOCATIONS

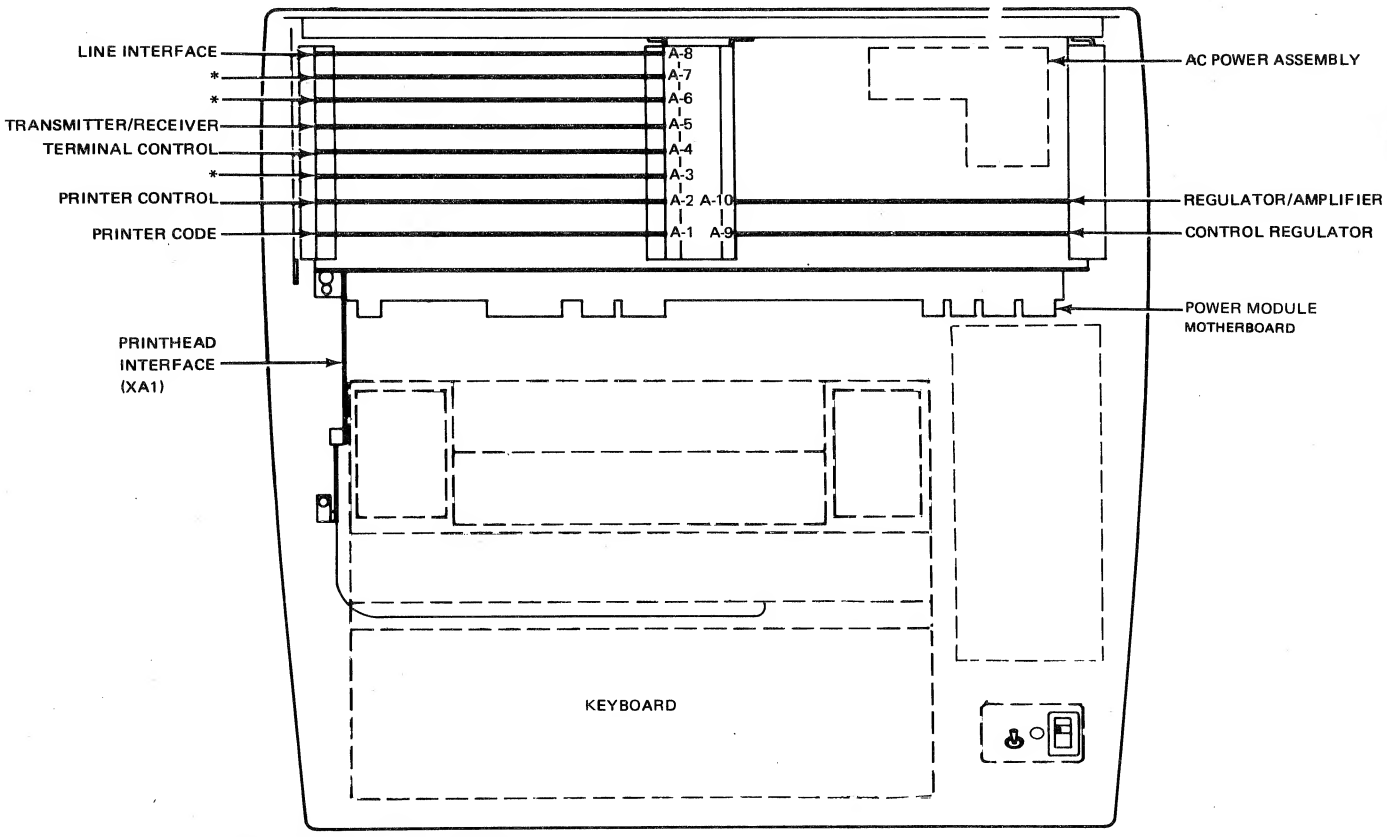

*RESERVED FOR OPTIONAL DEVICES

KSR PC CARD LOCATIONS

FIGURE 4-1. PC CARD LOCATIONS

four 3-position switches to place the keyboard, printer, playback, and recorder on LINE, OFF, or LOCAL. Each transport has two switches: one for REWIND and one for LOAD and FF (fast forward). There is also a mode selection switch to place the transports in RECORD or PLAYBACK. The Playback Control has three momentary switches with debounce circuits for continuous START/STOP, BLOCK FORWARD/REVERSE, and CHARACTER FORWARD. The Record Control has one momentary switch for ON/OFF, one momentary switch with debounce circuits for PRINT buffer/ERASE and one two-position switch for CONT/LINE format. The display card also has LED'S and drivers to indicate the following conditions for each cassette: indicators for mode (PLAYBACK/RECORD), READY, and END of tape. The Playback control has indicators for playback ON and playback ERROR. The Record Control has an 8-bit character display and a record-ON indicator.

4-3.3 MOTION CONTROL. The Motion Control PC card accepts inputs from the switches on the Display PC card and from the transport sensors (EOT, BOT, cassette in place, door closed, write tab, etc.) and generates signals to indicate record READY, Playback READY, recorder on-LINE, and playback on-LINE. This card also generates forward, reverse, and fast signals for the transports and the load signal for the gap counter. Circuits which identify and remember which end of the tape is which are also on this PC card.

4-3.4 REMOTE CASSETTE CONTROL. This PC card has the gap counters and mode control for both cassettes. The block reverse function of playback control is located on this PC card. The playback timers (TR3/4T, TR5/4T, and TR21/4T) are located on this PC card along with the tape-erase circuits. This card also contains the decoding for remote control of the cassettes. Four code bits and a strobe are decoded into the following 15 different functions:

1. Playback on
2. Playback off
3. Record on
4. Record off
5. Rewind cassette-1
6. Rewind cassette-2
7. Load/fast forward cassette-1
8. Load/fast forward cassette-2
9. Block forward
10. Block reverse
11. Character forward
12. Cassette-1 record
13. Cassette-2 record
14. Cassette-1 stop
15. Cassette-2 stop

4-3.5 PLAYBACK CONTROL. The Playback Control PC card contains the playback control (continuous, block forward, and character forward) and tape read controller circuits. The playback buffers with their address counters are also on this board in addition to the character counter which is used for playback control and the tape read control and stop-on-read-error circuits.

4-3.6 RECORD BUFFER CONTROL. This PC card contains the 1024-bit record buffer with the punch address counter, tape write address counter, and the address select gates. The punch address register, which is used in the edit function, is on this PC card along with the memory timing circuits and the reference clocks (TRFCLKA and TRFCLKB) for the transports. Also on this card are the serial-to-parallel-to-serial registers which accept data from the line, decode and add the carriage return and end-of-block bit, and convert back to serial for the memory. The character display register also is located on this PC card.

4-3.7 TAPE READ/WRITE. The Tape Read/Write PC card contains the tape read circuit which converts phase-encoded (PE) data from the transport into binary data and the tape write circuit which converts binary data from the write data register into PE data to go to the transport. It also contains the tape write controller which formats the data as follows: preamble, 86 data characters or nulls, two block check characters (nulls), and a postamble. The block character counter and the block counter are also located on this card.

4-3.8 RECORD CONTROL. The Record Control PC card contains the flipflops to synchronize the signals from the record switches (PRINT, ERASE, record ON, and manual STOP) and the state counters for the recorder. The punch character counter and character backspace counter with decoding for count = 0 and count = 86 are included on this card along with the punch counter buffer register.

SECTION V

MAINTENANCE

5-1 PREVENTIVE MAINTENANCE.

Model 732/733 ASR/KSR data terminals are designed and built to provide long term trouble-free operation under rigorous operating conditions. To ensure that the highest performance levels are maintained, the following preventive maintenance procedures should be performed at regular intervals. These consist primarily of keeping the thermal printer mechanism and cassette transports clean and free of foreign objects.

5-1.1 PRINTHEAD CLEANING. To ensure that the thermal printer continues to provide acceptable print quality, the printhead periodically should be cleaned as follows:

a. Lift the terminal cover and raise the window.

b. Remove the thermal paper from the platen.

c. On a sheet of good quality bond paper, wet a 2-inch wide strip with denatured alcohol (available from Texas Instruments in pint containers as Part No. 230007).

d. Quickly insert the bond paper into the terminal in the same manner as thermal paper.

e. Type five lines on the alcohol-wetted strip of the bond paper. Use the REPEAT key to accelerate the process.

f. Advance the bond paper to a dry area and type two more lines.

NOTE

The printer will not print a visible image on the bond paper.

g. Remove the bond paper and reload the thermal paper.

The printhead should be cleaned each time a new roll of paper is loaded into the printer or more often if the printed images start to fade as a result of residue buildup on the printhead.

5-1.2 PAPER DRIVE ROLLER CLEANING. To maintain uniform line spacing the paper drive roller must be kept clean. Use the following procedure.

a. Switch off power to the data terminal.

b. Remove paper from around the drive roller. Leave the window up.

c. Move the printhead to the far right side of the mechanism.

d. Wipe the left half of the paper drive roller with a soft rag or paper towel moistened with denatured alcohol. Rotate the drive roller manually to ensure that the entire roller is cleaned.

e. Slide the printhead to the far left and clean the right half of the drive roller.

f. Load the paper roll back around the drive roller, lower the window, and switch on power.

This procedure should be repeated every 3 months or whenever line spacing becomes uneven or too close.

5-1.3 PRINTHEAD DRIVE MECHANISM CLEANING. To ensure continued smooth, quiet operation of the printer mechanism, the printhead carriage rod and head lift bar must be kept clean. A dirty carriage can cause increased audible noise and can reduce the lifetime of the printer mechanism. Clean the carriage rod and head lift bar as follows.

a. Switch off power to the terminal and remove the roll of paper.

b. Clean the printhead carriage rod and head lift bar with a soft rag to remove paper residue (see Figure 5-1.1).

c. Carefully apply light grade machine oil (10W) on the carriage rod and light grade multipurpose grease (Shell Darina) on the top

and bottom edges of the head lift bar.

d. Manually run the carriage back and forth several times.

e. Reload the paper and switch on power.

This cleaning procedure should be performed every 3 months or whenever the carriage rod and head lift bar appear dirty.

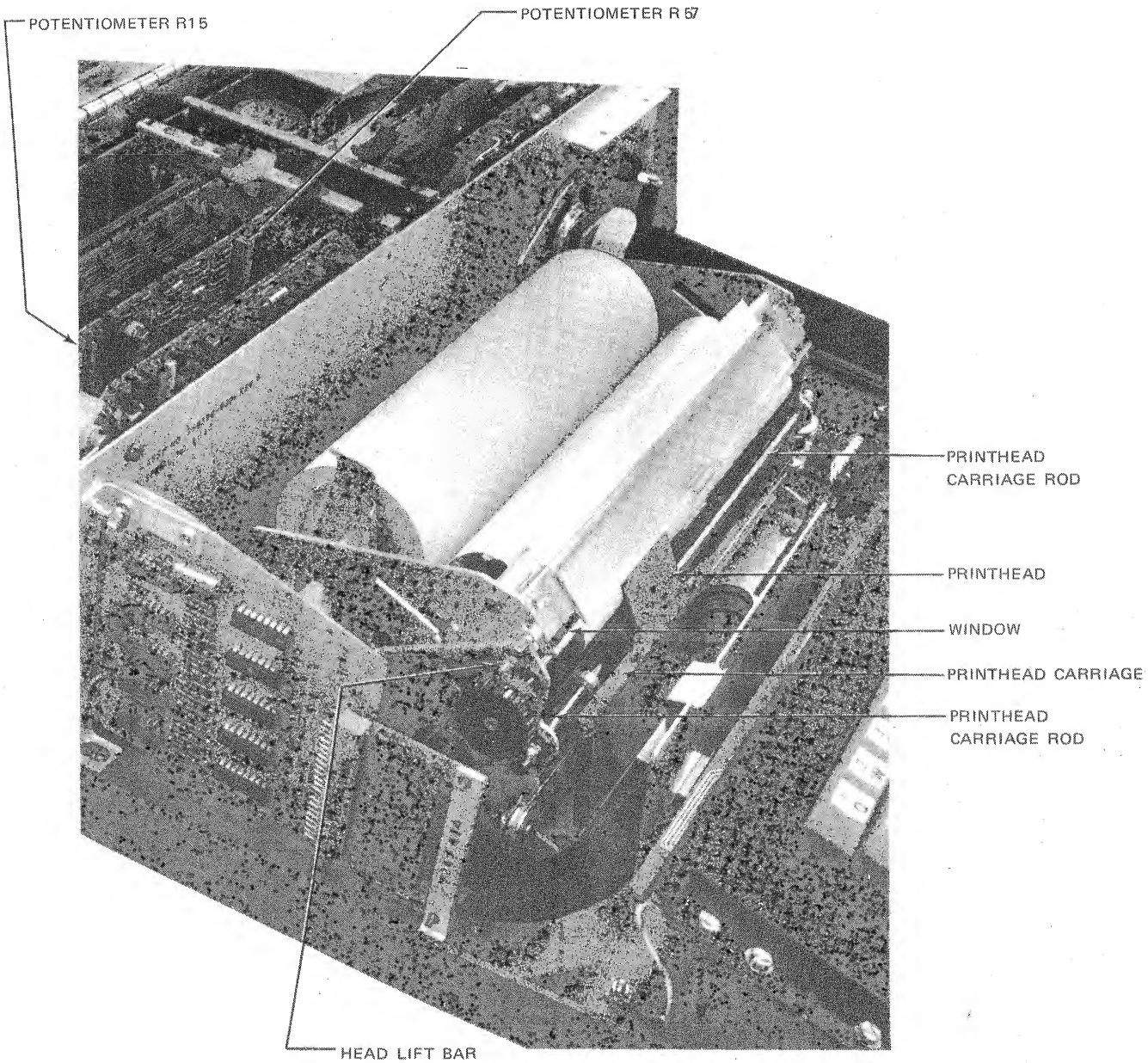

FIGURE 5-1.1. PRINTHEAD DRIVE MECHANISM CLEANING

5-1.4 CASSETTE TRANSPORT CLEANING. Carefully follow the tape manufacturers' recommendations for proper handling and storage of magnetic tape used with the ASR. In addition, clean the tape read/write heads, capstans, pinch rollers, and tape guides at regular intervals. To enhance cassette system data reliability (minimize data error rate), the following cleaning procedures should be completed once each day, or after 8 hours' operation.

a. Switch OFF data terminal power and remove the tape cassettes from the transports.

b. Lift the terminal cover to its stops and open the cassette transport doors.

c. Use clean Q-tip® type cotton swabs saturated with denatured alcohol (available from Texas Instruments in pint containers, Part No. 230007) to clean the pinch rollers, capstans, tape guides, and read/write heads shown in Figure 5-1.2.

(1) Swab the pinch rollers across the rolling surface a section at a time; then rotate the roller with the swab and clean another section. Discard the Q-tip when it becomes discolored and resume cleaning with a new Q-tip. Continue swabbing both pinch rollers in both transports until no discoloration appears on the Q-tip.

(2) Clean the tape guides by inserting the alcohol-saturated swab into each side of the tape guides. Change the Q-tips until no discoloration appears.

(3) Swab the read/write heads using a back-and-forth motion across the heads. Change the Q-tips until no discoloration appears.

(4) Lower the terminal cover and swab the capstans (located directly below the pinch rollers). Clean the length of the capstans, changing Q-tips until no discoloration appears.

5-2 TROUBLESHOOTING.

Troubleshooting the data terminal is facilitated by use of Tables 5-1 and 5-2, which will aid in localizing a failure to a particular card or assembly. Table 5-1 lists failures common to all data terminal models, and Table 5-2 lists failures which may occur only in the ASR models. Where more than one possible cause is listed for a particular problem, the PC card or subassembly is listed in descending order of probable cause. The omission of any PC card or subassembly as a cause for a specific problem does not eliminate that area, but the possibility of a failure is considered remote on the basis of experience.

5-3 ADJUSTMENTS.

The 732/733 ASR/KSR data terminals have only two field adjustments in normal use: the print contrast control and the modem level control (only in units equipped with the optional internal data set). All other adjustments are completed at the factory and should not be changed unless replacement of a component or subassembly makes readjustment necessary.

5-3.1 PRINT CONTRAST. To adjust print image contrast raise the hinged terminal cover and locate Printer Code PC card potentiometer R36. This potentiometer is accessible through a clearance hole in the Power Module card cage cover. To darken the images slowly turn the adjustment screw clockwise while typing characters from the keyboard until the desired contrast is achieved. To lighten the print image turn the adjustment screw counterclockwise.

CAUTION

1) DO NOT turn the adjustment screw more than one-quarter turn clockwise without checking contrast by printing a character. Contrast settings which cause scorching or sticking of the paper can result in permanent damage to the printhead.

2) If a new printhead is installed, turn the adjustment screw fully counterclockwise before reapplying system power. Then slowly turn the screw clockwise while typing until the desired contrast is obtained.

5-3.2 MODEM LEVEL ADJUSTMENT. Terminals which incorporate the optional internal data set (modem) must have the modem output adjusted when the terminal is installed. The adjustment also should be rechecked periodically.

5-3.2.1 Switched Telephone Network. Connection to the switched telephone network ordinarily is made by means of a data coupler, a Bell Direct Access Arrangement, or similar device provided by the local telephone company. The

telephone company dictates the maximum permissible power level of the combined received and transmitted data signals present at the terminals of the coupling device. This level is usually expressed in dBm (0 dBm = 1 milliwatt dissipated in a 600-ohm load) and is stamped on the face of the coupler.

a. With power off connect the terminal to the data coupler by means of the data set cable. If the data coupler is not equipped with a power level meter, connect an ac vacuum tube voltmeter to the coupler terminals.

b. Call another operating terminal within the system and arrange to receive a data or steady MARK signal. While receiving this signal observe the VTVM; the indication should be several dBm below the allowable limit stamped on the coupler.

c. Apply power to the terminal and again observe the meter reading. Adjust potentiometer R18 on the Modem PC card (slot A-8) until the meter reading is 1.5 dBm below the allowable maximum.

CAUTION

The adjustment screws of all modem

TABLE 5-1. FAILURE ANALYSIS CHART, ASR AND KSR MODELS

Symptom	Power Assembly	Drive Assembly	Keyboard	Reg/Amp	Control/Regulator	Code Card	Printer Control	Terminal Control	XMT/RCV	Line Interface	Answer-Back Memory	Printhead Interface	Printhead
Terminal Completely Inoperative	1			3	2				4				
Printhead Does Not Return When Power Applied	1	4		3	2		5						
Printhead Returns To Wrong Column		1		2			3						
Paper Advance Inoperative		3	4	2			1						
Will Not Print Although Head Steps						1						2	3
Printhead Oscillates		2		3			1						
Printhead Steps Erratically		2		3			1						
Printhead Does Not Lift On Paper Advance		1		2			3						
Keyboard Inoperative Except Paper Advance			1			2		3					
Specific Keys Will Not Print			1			2							
Serial Data Not Transmitted								3	2	1			
Serial Data Not Received								3	2	1			
HERE IS Key Inoperative			1								2		
Carriage Return Too Slow		1					2						
Does Not Print All Elements		3				4						2	1
Printhead Does Not Step		2		1			4	3					

NOTE: Numbers within boxes indicate order of failure probability.

TABLE 5-2. FAILURE ANALYSIS CHART, ASR MODELS ONLY

Symptom	Tape Transport	Display Card	Motion Control	Remote Cassette Control	Playback Control	Tape Read/Write	Record Buffer Control	Record Control	Tape	Remarks
Tape Will Not Rewind	3		2						1	
Tape Will Not Load	2		3				4		1	If In Record Mode Check Write Tabs
Cannot Read Tape	2				4	3			1	
No Character Display		2					1			
RECORD ON Lamp Goes Out			1							
Will Not Write Tape	2			5		1	3	4		
Excessive Errors While Reading	1				3		4		2	Be Sure Tape Head, Capstans and Pinch Rollers are Clean
Will Not Sense BOT	2		3						1	
Will Not Block Reverse	1			2						
Reads Wrong Data From Good Tape					1		2			
Will Not Write 1st Character of Block							1			
Will Not Write Tape on CR							1			
Will Not Print Buffer							2	1		
Will Not Erase Tape Properly	2			1		3				

NOTE: Numbers within boxes indicate order of failure probability.

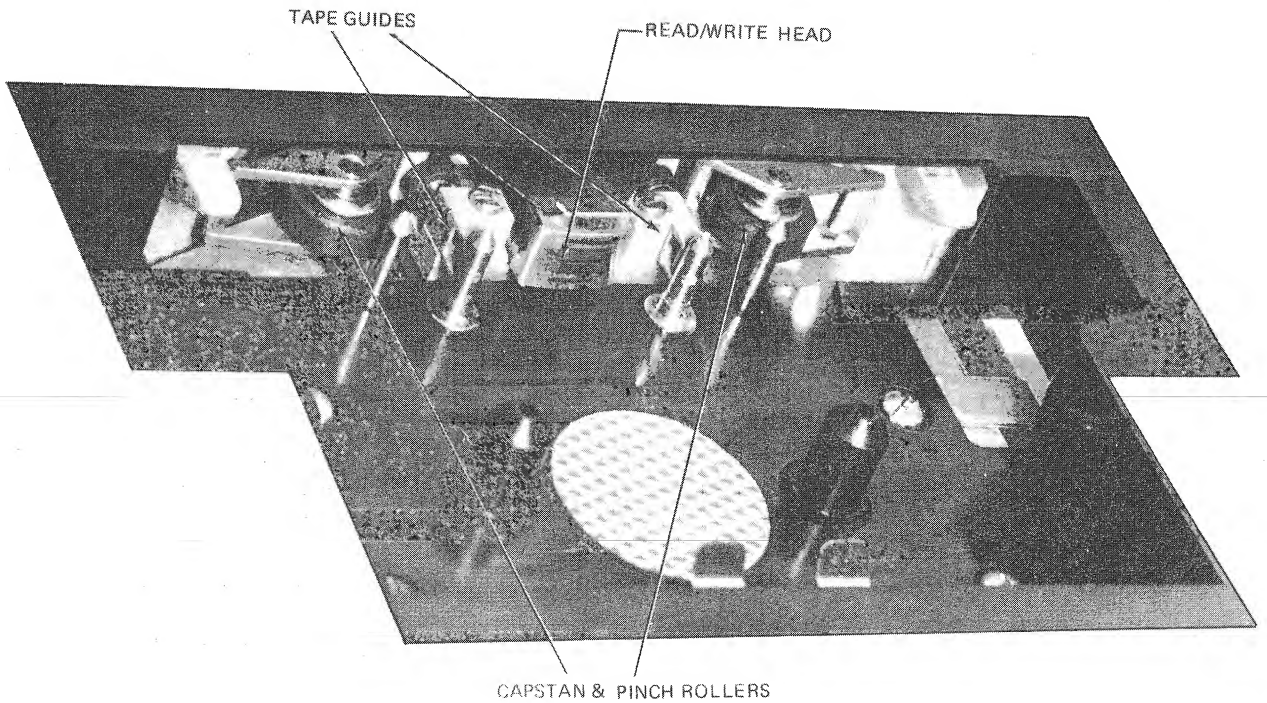

FIGURE 5-1.2. TAPE CASSETTE TRANSPORT CLEANING AREAS

potentiometers, except R18, have been sealed at the factory. Do not readjust any potentiometers except R18.

5-3.2.2 Private Wire Systems. Transmitted data signal levels in private wire communications systems must be established by the systems' engineers. Once this level has been determined, adjust the modem level as described above for the switched telephone network. The level must be adjusted while the terminal is connected to the private wire terminator.

5-3.3 PRINTER SUBSYSTEM ADJUSTMENTS. Under normal operating conditions the closed loop control circuitry of the printer subsystem will compensate for friction changes caused by wear, temperature variations, and component aging. Field adjustments should not be required unless a critical component or subassembly is replaced. If printing performance becomes unsatisfactory, do not attempt adjustments until the cause is fully understood. Be sure that the drive assembly is cleaned and lubricated according to the preventive maintenance instructions. Also, check for excessively worn parts such as a frayed drive cable or loose carriage body before adjusting.

Special test equipment is used at the factory to optimize adjustments so that the printer will perform within specified ranges of temperature, humidity, and power line voltage. The field adjustment procedures listed below should return the printer to operation after replacement of a critical subassembly. The field adjustments may not be optimum, however, and readjustments may be required if operating conditions are changed radically. Field adjustments should always be made under conditions which duplicate as closely as possible the intended operating environment of the terminal.

5-3.3.1 Head Lift Adjustment.

a. Switch off power and raise the terminal cover.

b. Cut or tear the printing paper so that a 6-inch strip remains in the printer; remove the paper roll.

c. Remove the drive belt from the paper advance motor.

d. Apply power and depress the PAPER ADV key to raise the printhead. With a feeler gauge, carefully measure the clearance between head and platen (roller). If not 0.025 (±.010) inch, adjust the solenoid stroke by turning the knurled knob on the bottom of the solenoid (looking down – CW to increase, CCW to decrease). To prevent the solenoid plunger from rotating, support the black retainer into which the solenoid plunger screws with your other hand or a 3/8 inch open-end wrench.

e. With the stroke adjusted and power off, measure the printhead force against the platen, using a force gage calibrated from 0 to 32 ounces. (Hunter T-2P-TC or equivalent). The head force should be 12 (±1) ounces; if not, replace the spring adjacent to the head lift solenoid.

5-3.3.2 Holding Current Adjustment.

a. Switch off power.

b. Use a Hunter force gage (T-2P-TC or equivalent) to pull the printhead smoothly across the paper (with head down) from column 1 to column 80. Maximum friction force should not exceed 11 ounces. Minimum and maximum force measurements should not vary more than 3 ounces. If these conditions are not met, check for dirt, improper lubrication, and worn or damaged parts.

c. Switch on power and step the printhead to column 40. Measure the force required to pull the head to column 41; if not 18 (±1) ounces, remove the card cage cover and adjust Printer Control PC card (slot A-2) potentiometer R57 (clockwise to increase, counterclockwise to decrease holding force).

d. Recheck the holding force each time R57 is adjusted 1/4 turn until the force is 18 (±1) ounces.

5-3.3.3 Forward Stepping Adjustment.

a. Depress a printable character key, such as L. The printhead should print the character and step to the right one column.

b. If the head does not step, locate the damping sensor adjustment screw on the rear of the head stepping motor assembly [The damping sensor is on the side of the motor, opposite the

keyboard]. Turn the adjustment screw fully counterclockwise, then 1/2 turn clockwise.

c. Again depress the L key and observe the printhead. Continue adjusting the screw 1/2 turn clockwise and printing a character until the head consistently steps to the right.

d. Next, depress the REPEAT and L keys simultaneously and observe the printhead. Adjust the damping sensor screw to the position which results in best defined image (minimum dot smearing) and minimum acoustic noise.

5-3.3.4 Backspace Current Adjustment.

a. Depress the CTRL (control) and H keys simultaneously. The printhead should step one column to the left. If it does not, turn Printer Control PC card potentiometer R15 fully counterclockwise, then one turn clockwise.

b. Again depress the CTRL and H keys. Repeat this procedure, adjusting R15 one turn at a time until the printhead steps to the left.

c. Next, depress the REPEAT, CTRL and H keys simultaneously. The printhead should step smoothly to the left until the REPEAT key is released. If not continue adjusting R15 1/4 turn at a time until smooth repeat backspace performance is observed.

d. While performing the repeat backspace function, depress the H key, but not the CTRL key. The first letter H printed should not be smeared.

e. Continue fine adjustment of R15 until optimum performance is achieved.

5-3.3.5 Carriage Return Adjustment.

a. Connect the Printer Control PC card (slot A-2) to a PC card extender. Connect an oscilloscope to trigger from Z23-1 (981313) or Z11-1 (*959131), the positive-going TTL level shift and observe Z14-6(981313) or Z30-1(*959131), the negative-going TTL level shift.

b. Step the printhead to column 81 (right margin); depress the RETURN (carriage return) key and observe the oscilloscope. The delay to the fall of Z14-6 (981313) or Z30-1 (*959131), column 12, should be 105 ±10 milliseconds.

c. If not within specifications, locate the feedback sensor adjustment screw on the rear of the head stepping motor assembly. The feedback sensor is on the side of the motor nearest the keyboard. Turn the screw counterclockwise to accelerate carriage return; turn clockwise to decelerate.

d. Repeat step c. until the specified delay to column 12 is achieved.

e. As a final check, observe the signal at Z2-4 (981313) or Z26-8 (*959131) the positive-going TTL level shift. The delay between carriage return from column 81 and the rise at Z2-4 (981313) or Z26-8 (*959131) should be 140 (±10) msec. [Specified times are measured at 25°C and 115 Vac line voltage. Carriage return time will increase as line voltage and/or temperature decrease, and decrease as temperature and voltage increase.]

5-4 SUBASSEMBLY REMOVAL AND REPLACEMENT.

Many modular-design subassemblies are easily removed to facilitate repair or replacement. Figure 5-4.1 shows some of the important modules and their attach and plug-in points. Detailed procedures are described in the following paragraphs.

5-4.1 KEYBOARD. To remove the keyboard from either a KSR or ASR unit, consult Figure 5-4.1 and proceed as follows:

a. Switch off power to the terminal.

b. Lift the terminal cover to expose the entire keyboard.

c. Remove all keyboard connectors along the back right edge of the keyboard.

d. Remove the four screws which hold the keyboard to its mounting.

e. Remove screw, nut, and washers at upper left side of keyboard to disconnect ground strap. Note carefully location of washers so they are reinstalled in the same position for proper grounding.

*This PC card is obsolete

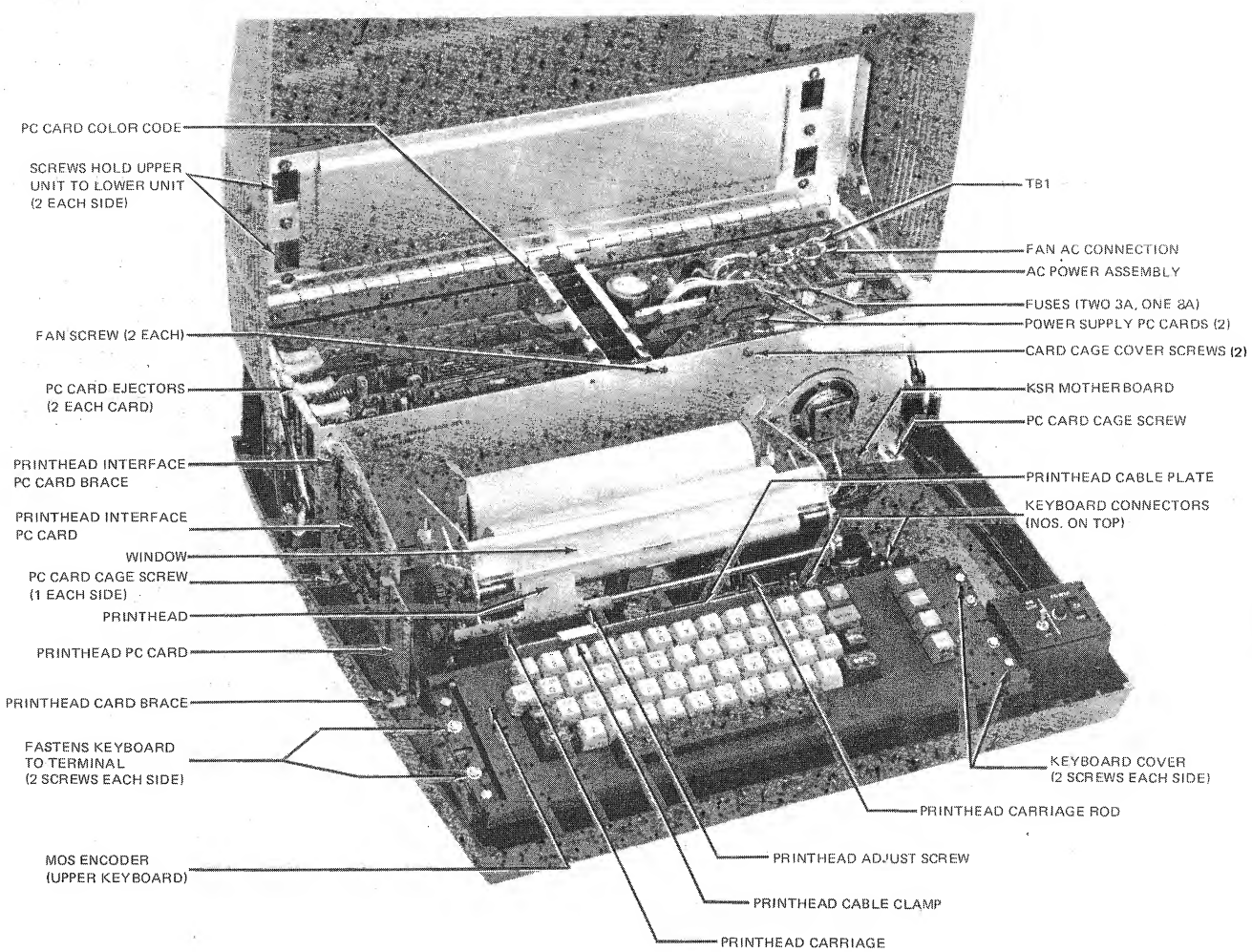

FIGURE 5-4.1. SUBASSEMBLY REMOVAL AND REPLACEMENT INFORMATION

f. After lifting out the keyboard, place protective foam across the pins of the MOS encoder chip.

CAUTION

Do not touch the MOS encoder pins at anytime; damage to the MOS device may result.

To install the keyboard on either a KSR or ASR unit, proceed as follows (see Figure 5-4.1).

a. Switch off power to the terminal and remove the old keyboard as described in steps a. through e. above.

b. After removing the old keyboard from the terminal, remove the keyboard cover by removing the four screws and nuts which fasten the cover to the keyboard.

c. Reinstall the cover on the new keyboard, ascertaining that all keyboard keys move freely.

d. Remove the protective foam which may cover the MOS encoder on the new keyboard, and place the foam on the MOS encoder of the old keyboard. Be careful not to touch the MOS encoder pins at anytime on either the old or new keyboards as this may damage the MOS devices.

e. Mount the new keyboard on its brackets using the four screws from the old keyboard.

f. Connect the ground strap exactly as previously installed.

g. Replace all keyboard connectors on the back right edge of the keyboard, being sure the connector is positioned with numbers on top.

5-4.2 PRINTHEAD. To remove the printhead see Figure 5-4.1 and proceed as follows.

a. Switch off power to the terminal and raise the cover to expose the paper drive mechanism.

b. Loosen the screw holding the printhead card brace in place and unplug the Printhead PC card from the Printhead Interface PC card.

c. Lift the window and move the printhead to the far right margin, noting the curvature of the printhead cable. The cable should lay flat against the printhead for a distance of at least 1/4 inch before curving to the printhead plate.

d. Remove the clamp which holds the cable to the printhead plate.

e. Loosen the two screws which hold the printhead to the carriage and remove the entire printhead assembly from the terminal.

Install the printhead as follows (see Figure 5-4.1).

a. Switch off power to the terminal and remove old printhead as described in steps a. through e. above.

b. Be sure the carriage is moved to the far right hand margin.

c. Place the head back on the carriage, being sure slot and hole in printhead are aligned with pins on carriage, and tighten the two screws which fasten it.

d. Clamp the cable back on the printhead cable plate; the cable should lay flat against the head for at least a distance of 1/4 inch before it starts curving toward the printhead cable plate.

e. Plug the Printhead PC card into the Printhead Interface PC card and tighten the screw which fastens the printhead card brace to the terminal.

f. Lower the window and apply power to the terminal.

g. Type several characters. If full characters do not print, loosen the two printhead mounting screws, turn the printhead adjust slotted pin located on the carriage (CW to raise; CCW to lower). The pin protrudes through the lower left corner of the heat sink. Retighten mounting screws.

CAUTION

The full adjustment range is 1/4 turn of the slot from the horizontal either CW or CCW. Do NOT exceed.

5-4.3 DRIVE ASSEMBLY. To remove the drive assembly, see Figure 5-4.1 and proceed as follows.

a. Switch off power to the terminal.

b. Loosen the screw which fastens the Printhead card brace to the terminal and unplug the Printhead PC card from the Printhead Interface PC card.

c. Remove any paper in the printer.

d. Unplug all connectors to the drive assembly from the front edge of the KSR motherboard.

e. Loosen the four screws which hold the drive assembly to the terminal base.

f. Loosen and remove the grounding strap between the card cage and the mechanism.

g. Lift out the drive mechanism, being sure the printhead cable or PC card does not catch on any other part of the terminal.

To install the drive assembly, complete the following steps.

a. Switch off power to the terminal.

b. Mount the drive assembly on its shock mounts in the terminal base and retighten the four screws which fasten the mechanism to the base plate.

c. Install all connectors, as marked, along the front edge of the KSR motherboard.

d. Install the grounding strap between the card cage and the mechanism by retightening the screw.

e. Mount the printhead on the drive assembly as instructed in paragraph 5-4.2 above.

f. Reinsert print paper in the terminal and apply power.

5-4.4 PRINTHEAD INTERFACE PC CARD. Remove the Printhead Interface PC card as follows (see Figure 5-4.1).

a. Switch off power to the terminal.

b. Loosen the screw holding the printhead card brace to the base plate and unplug the printhead PC card.

c. Loosen the screw holding the Printhead Interface PC card brace to the card cage and remove the Printhead Interface PC card.

Install the Printhead Interface PC card as follows (see Figure 5-4.1).

a. Switch off power to the terminal.

b. Plug the new Printhead Interface PC (component side out) into the connector on the Printer Code PC card through the opening in the card cage.

c. Tighten the Printhead Interface PC card brace screw.

d. Plug in the Printhead PC Card and tighten the screw which fastens the printhead card brace to the base plate.

5-4.5 PLUG-IN PC CARDS (LOWER UNIT). Remove lower unit PC cards as follows (see Figure 5-4.1).

a. Switch off power to the terminal.

b. Lift the terminal cover and loosen the card cage cover screws and remove the cover.

c. Insert thumbs under the card ejectors (to inside of card) and lift.

Install lower unit PC cards as follows.

a. Switch off power to the terminal.

b. Locate the appropriate card cage slot for the card to be inserted. The right-hand card ejector (viewing the card from the component side) should match the colored dot on the card cage.

c. Slide the card into the card cage slot and press it firmly down, applying equal pressure to both card ejectors.

d. Replace the card cage cover, being sure the three tabs at rear of cover are properly inserted into the slots at rear of card cage, and tighten the screws holding the cover to the card cage.

e. Close terminal cover and apply power.

5-4.6 SECONDARY FUSES. Remove and replace a secondary fuse (under the terminal cover) as follows (see Figure 5-4.1).

a. Switch off power to the terminal and REMOVE THE LINE CORD FROM THE AC OUTLET.

b. Lift the terminal cover and remove the card cage cover.

c. Remove the two ac power assembly cover screws and the cover.

d. Remove the appropriate fuse.

e. Replace the old fuse with a fuse of the SAME SIZE AND RATING.

f. Replace the ac power assembly cover and the card cage cover.

g. Close the terminal cover and plug the terminal power cord into the ac outlet.

5-4.7 AC POWER ASSEMBLY. Remove the ac power assembly as follows (see Figure 5-4.2).

a. Switch off power to the terminal and REMOVE THE TERMINAL LINE CORD FROM THE AC OUTLET.

b. Remove the KSR fan connections at TB1-2 and TB1-5 and the ASR fan plug at the rear of the terminal. Also remove the two Power Supply PC cards in slots A9 and A10.

c. Remove the four screws at the back of the terminal which fasten the ac power assembly to the card cage.

d. Lift the power assembly out of the terminal with one hand and guide the line cord through the rear of the terminal base plate with the other hand.

Install the ac power assembly as follows (see Figure 5-4.2).

a. Switch off power to the terminal and UNPLUG THE TERMINAL LINE CORD FROM THE AC OUTLET.

b. Place the ac power assembly in place in the back right corner of the card cage, guiding the ac line cord through the hole in the rear of the base plate.

c. Fasten the assembly to the card cage with four screws inserted through the four holes in the rear of the base plate.

d. Reinstall the KSR fan connections at TB1-2 and TB1-5 and plug the ASR fan into the connector at the rear of the terminal.

e. Replace the power cord in the ac outlet.

5-4.8 LOWER UNIT FAN. Remove the lower unit (KSR) fan as follows (see Figure 5-4.2).

a. Switch off power to the terminal and REMOVE THE LINE CORD FROM THE AC OUTLET.

b. Open the terminal cover and remove the card cage cover and the ac power assembly cover.

c. Remove all PC cards in the lower unit.

d. Remove the KSR fan connections from TB1-2 and TB1-5.

e. Loosen and remove the eight screws (four in front and four in back of the card cage) which hold the fan assembly in place.

f. Remove the fan.

Install the lower unit (KSR) fan as follows (see Figure 5-4.2).

a. Switch off power to the terminal and UNPLUG THE LINE CORD FROM THE AC OUTLET.

b. Mount the fan with the ac power line for the fan coming out of the bottom right rear side.

c. Route the ac line up to the ac power assembly and connect one wire to TB1-2 and the other to TB1-5.

d. Insert eight screws to fasten the card cage piece back to the card cage, enclosing the fan in the assembly.

e. Replace the ac power assembly cover.

f. Plug the PC cards into the terminal, plug the line cord into the ac outlet, and apply power to the terminal.

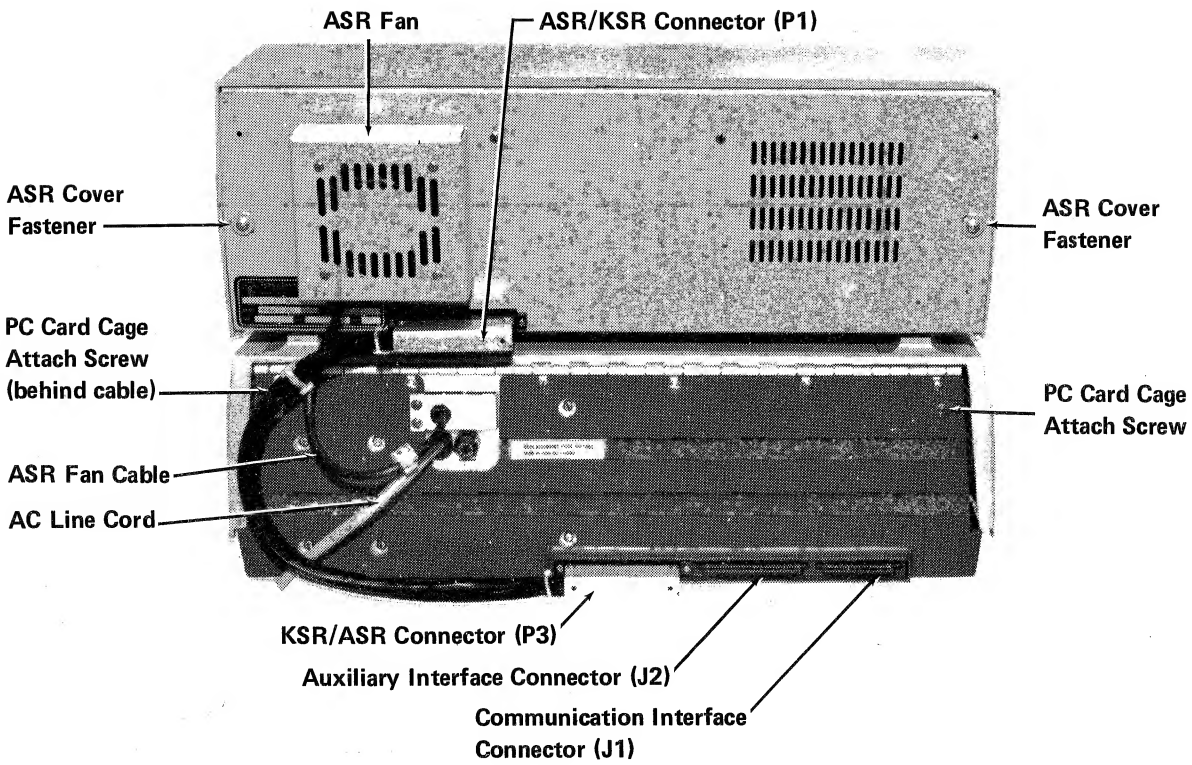

FIGURE 5-4.2. DATA TERMINAL (REAR VIEW)

g. If the fan blades scrape the card cage, switch off terminal power.

h. Loosen the eight card cage screws and push the two pieces which hold the fan in place away from each other as far as possible.

i. Hold the pieces apart as far as possible while retightening the eight screws.

j. Switch on power. If the fan blades still scrape the card cage, repeat the above procedures (h. and i.) until the fan turns freely.

k. Replace the card cage cover and close the terminal cover.

5-4.9 POWER MODULE ASSEMBLY. Remove the power module assembly (card cage and attachments) as follows (see Figure 5-4.2).

a. Switch off power to the terminal and REMOVE THE LINE CORD FROM THE AC OUTLET.

b. Remove the two screws at the rear of the terminal which fasten the card cage to the base plate.

c. Lift the terminal cover and remove the card cage cover.

d. Remove any paper in the machine.

e. Disconnect all connectors along the front and rear edges of the KSR motherboard and disconnect the ASR fan plug.

f. Loosen the two screws at the front right and lower left corners of the card cage which fasten the card cage assembly to the base plate.

g. Remove the grounding strap between the mechanism and the card cage.

h. Slide the assembly forward as far as possible and lift the front of the card cage forward and upward.

i. Guide the ac line cord through the hole in the rear of the terminal as the power module is lifted out.

Install the power module assembly as follows (see Figure 5-4.2).

a. Switch off power to the terminal and REMOVE THE AC LINE CORD FROM THE OUTLET.

b. Install the power module, being sure to guide the ac line cord through the hole in the rear of the data terminal. Guide the PC edge connectors through the connector hood at the rear of the terminal.

c. Ascertain that no wires are trapped between the base plate and motherboard and push the assembly back as far as possible to the rear of the terminal. Tighten the two screws at the front lower right and left edges of the card cage.

d. Install the two screws at the rear of the terminal which hold the card cage to the base plate.

e. Install all connectors to the front and rear edges of the KSR motherboard and plug in the ASR fan.

f. Install the PC cards and the card cage cover.

g. Close the terminal cover and plug in the ac line cord.

5-4.10 ASR MODULE ASSEMBLY (UPPER UNIT). Remove the upper unit assembly as follows (see Figures 5-4.1 and 5-4.2).

a. Switch off power to the data terminal.

b. Remove the ASR ac fan connector.

c. Remove the ASR/KSR interconnecting cable.

d. Open the terminal cover and loosen the four screws which fasten the ASR unit to the terminal cover.

e. Close the terminal cover and slide the ASR unit forward and lift off.

Install the ASR upper unit as follows (see Figure 5-4.1).

a. Switch off power to the terminal.

b. Insert four screws into the feet of the upper unit several turns.

c. Place the upper unit onto the pedestals on the terminal cover so that the screws in the base fit into the pedestal slots in the terminal cover (front panel toward front of terminal).

d. Slide the upper unit back as far as possible to the rear of the terminal.

e. Open the terminal cover and tighten the four screws securely.

f. Connect the ASR fan plug and the ASR/KSR interconnecting cable at the rear of the lower unit.

5-4.11 DISPLAY CARD ASSEMBLY. To remove the display card assembly, complete the following steps (see Figure 5-4.3).

a. Switch off power to the terminal.

b. Remove the ASR cover and card cage cover.

c. Remove the two screws which hold the display panel to the card cage.

d. Place your thumbs under the card ejectors (to inside of card) and lift up.

To install the display card assembly proceed as follows (see Figure 5-4.3).

a. Switch off power to the terminal.

b. Place the display card into the proper card slot, matching the card ejector color with the color dot on the card cage.

c. Apply equal pressure downward to both card ejectors until the card fits snugly into the PC card connector on the motherboard.

d. Replace the two screws holding the assembly to the card cage; do NOT overtighten these screws.

e. Replace the ASR card cage cover and the ASR cover.

5-4.12 PLUG-IN PC CARDS (UPPER UNIT). Removal and replacement of all upper unit PC cards is the same as described in paragraph 5-4.5 , except the display PC card (front panel card). It is the only card which is fastened to the card cage with screws.

5-4.13 CASSETTE TRANSPORT. To remove a cassette transport, proceed as follows (see Figure 5-4.3).

a. Switch off power to the terminal.

b. Remove the ASR cover.

c. Open the transport door and remove the tape cassette.

d. Loosen the three Phillips-head screws which hold the tape transport to the ASR baseplate.

e. Lift out the transport.

To install a transport proceed as follows (see Figure 5-4.3).

a. Switch off power to the terminal.

b. Insert the Transport PC card into the appropriate connector (XA-8 or XA-9).

c. Use a Phillips-head screwdriver to tighten the three screws which fasten the transport to the ASR baseplate.

d. Replace the ASR cover.

5-4.14 UPPER UNIT FAN. To remove the upper unit fan complete the following steps (see Figure 5-4.2).

a. Switch off power to the terminal.

b. Unplug the ASR fan connector at the rear of the lower unit.

c. Remove the four screws which fasten the fan to the ASR rear cover.

d. Remove the ASR fan from its cover.

Install the upper unit fan as follows (see Figure 5-4.2).

a. Switch off power to the terminal.

b. Place the fan in the fan cover and orient the ac power cord so that it exits the cover through the bottom.

c. Insert four screws in the fan assembly, making sure each screw goes through both the cover and the fan.

d. Insert the four screws in their proper places on the ASR baseplate at the rear of the terminal and tighten.

e. Plug the ac fan cord into the connector at the rear of the lower unit.

5-4.15 MOTHERBOARD (UPPER UNIT). To remove the upper unit motherboard, complete the following steps (see Figure 5-4.3).

a. Switch off power to the terminal and UNPLUG THE AC POWER CORD.

b. Remove the ASR cover, unplug the ASR/KSR interconnecting cable at the rear of the terminal, and remove the card cage cover.

c. Remove all PC cards and transports as described in previous steps.

d. Remove the eight screws which fasten the motherboard to the ASR baseplate.

NOTE:
The ASR card cage is also removed by four of the screws.

e. Remove the ASR motherboard.

To install the upper unit motherboard, complete the following steps (see Figure 5-4.3).

a. Switch off power to the terminal and remove the old motherboard as described above.

b. Place the new motherboard on the baseplate standoffs so that the edge connector fits into the slot in the rear of the ASR baseplate.

c. Position the ASR card cage in the middle of the motherboard so that the card slot for the ASR front panel is toward the front of the terminal.

d. Loosely insert the eight screws which fasten the motherboard and card cage to the ASR baseplate.

e. Plug in the ASR/KSR connector at the rear of the ASR unit.

f. Tighten the eight screws to securely fasten the motherboard and card cage to the ASR baseplate.

g. Install all PC cards and transports and replace the ASR cover.

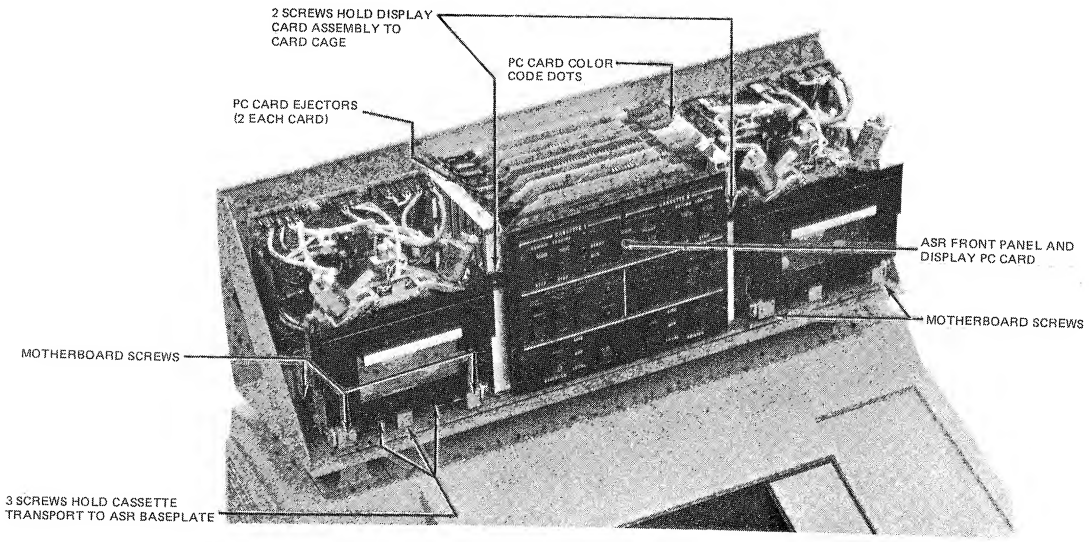

FIGURE 5-4.3. ASR UPPER UNIT REMOVAL AND REPLACEMENT (FRONT VIEW)

APPENDIX A

SIGNATURE LIST

PC Card	Page
Printer Code	A-1
Printer Control	A-2
Answer-Back Memory	A-4
Terminal Control	A-5
Transmit/Receive	A-6
Auto Device Control (option)	A-7
Remote Device Control (option)	A-8
Auto Answer Control (option)	A-12
Automatic Search Control (option)	A-10
TTY Line Interface	A-13
Modem Line Interface	A-13
Control Regulator	A-14
Regulator Amplifier	A-14
Printhead Interface	A-15
Display	A-16
Tape Motion Control	A-16
Remote Cassette Control	A-17
Playback Control	A-19
Record Buffer	A-20
Tape Read/Write	A-21
Record Control	A-22
Cassette Transport	A-23

APPENDIX A

SIGNATURE LIST

The following signal signatures are arranged alphabetically in order of PC card slot number; e.g., the Printer Code card is A1, the Printer Control card is A2. The lower unit (KSR) PC card signatures are listed first, the upper unit (ASR), next. In general, the signatures represent abbreviations of the signal function: CLK = clock, WRT = write, etc.

SLOT A-1. PRINTER CODE.

Signature	Definition	Function
BELCLK	bell clock	3.2 kHz
BELL–	bell	output to speaker
BFIGS	figures	go to figures mode
CLAMP	clamp	clamps print voltage to 0 volt
CNTRL–	control	logic ZERO for control character
CNT72	count 72	signifies column 72
COMCLR	complete clear	clears "complete" flipflop
COMPLT	complete	data transfer complete
CLK	control clock	clocks in control bit
DATA		serial data bus
DBEL	bell	control decode
DBS	backspace	control decode
DCR	carriage return	control decode
DGRND	diode ground	ground return
DHTFIG	figures	control decode
DLF	line feed	control decode
DNULLTR	letters	control decode
DVOLT	diode voltage	temperature compensation
ENDBEL–	end bell	ends column-72 bell
HDRS1	head resistor 1	fast print compensation adjust
HDRS2	head resistor 2	slow print compensation adjust
KBBIT1	keyboard bit 1	tied to bit input; also least significant bit position
KBBIT2	keyboard bit 2	
KBBIT3	keyboard bit 3	
KBBIT4	keyboard bit 4	
KBBIT5	keyboard bit 5	
KBBIT6	keyboard bit 6	
KBBIT7	keyboard bit 7	
KBBITP	keyboard bit P	same as bit 1; most significant bit
KBDCLR	keyboard clear	
KBDENA–	keyboard enable	data on bus from keyboard
KBDON	keyboard on	also keyboard remote off
KBDREQ–	keyboard request	
KBDSTB–	keyboard strobe	
MOSCLR	MOS clear	character generator clear
OVL–	overvoltage	clears printhead buffer
PAT0	pattern ZERO	removes printhead clear
PAT1	pattern 1	enables character generator clear

SLOT A-1. PRINTER CODE (Concluded)

PAT2	pattern 2	enables control bit clock
PAT6	pattern 6	enables 2nd part of pattern counter
PBIT1	printer bit 1	least significant bit
PBIT2	printer bit 2	
PBIT3	printer bit 3	
PBIT4	printer bit 4	
PBIT5	printer bit 5	
PBIT6	printer bit 6	
PBIT7	printer bit 7	
PBITP	printer bit P	most significant bit
PGO–	printer go	starts printer control
PGORST	printer go reset	reset PGO- flipflop
PHBFRCLR–	printhead buffer clear	
PHCHR	printhead character	35 bits; to printhead buffer card
PHCLK	printhead clock	clocks data to printhead buffer
PRINT	print	print command
PRNENA–	printer enable	data on bus to printer
PRTRST	printer reset	
PVOLT	print voltage	power to printhead
PWRRST–	power reset	
RDRCLK	reader clock	204.8 kHz
REPEAT–		keyboard repeat key
REPOFF	repeat off	REPEAT key not depressed
SCLK–	system clock	clocks data around serial bus
STROBE	strobe	signifies keyboard strobe received
ST1D	state 1D	state 1D flipflop input
ST1Q	state 1Q	state 1Q flipflop output

SLOT A-2 PRINTER CONTROL.

Signature	Definition	Function
BKSPCQ	backspace	indicates printer is backspacing
BRAKECRTN	break carriage return	controls power to head step motor (HPC) during carriage return break time.
BRAKEBSKP	break backspace	controls power to head step motor (HPC) during backspace break time.
CNTRL–	control	input from character decode; low for control characters high for printhead characters.
CNT72	count 72	high when printhead in column 72; enables Code Card bell circuit to sound end-of-line warning.
CRCLK	carriage-return clock	clock for backspacing head during carriage return (derived from feedback sensor).
CYCLRST	cycle reset	resets printer control after a regular print cycle (30 msec).
C800	clock 800	800 Hz square wave.
DBS	decode backspace	input from character decode; high for backspace, low for all other characters.
DCR	decode carriage return	input from character decode; high for carriage return, low for all other characters.
DDS	dynamic damping sensor	input to damping controller, normally 0V; as head steps left or right, a slot in tach wheel passes before sensor, producing a positive-going pulse; clamping monostable triggered on pulse trailing edge.

DLF	decode line feed	input from character decode; high for line feed, low for all other characters.
ENDBEL–	end bell	negative-going pulse approximately 30 msec after PGO– is received when head at column 72; terminates end-of-line warning.
FBS	feedback sensor	input to carriage return controller; alternates from 0 to +2 V as tach wheel passes before sensor.
FSCLK	failsafe clock	clock for backspacing head during failsafe carriage return (derived from a counter, clock occurs every 20 msec).
HDCLK	head clock	steps carriage forward 1 column
HOME		indicates carriage at left margin
HPC	head power control	analog voltage (always positive), programs current to head-stepping motor; amplitude depends on operation performed.
HPHSA	head phase A	
HPHSB	head phase B	
HPHSC	head phase C	high level on an output enables head stepping motor power driver for corresponding phase.
KBPA–	keyboard paper advance	contact closes to ground when PAPER ADV key depressed; if head not at left margin, carriage return and one line feed (single or double) are executed; if PAPER ADV released within 190 msec, no other action occurs; if PAPER ADV hold down or head at left margin, line feed performed at 30 msec intervals.
LHLS–	left-hand limit switch	approximately 0V when head at left margin (col. 1); approximately +2V at all other times.
LIFTHEAD	lift head	positive-going decaying exponential voltage, programs current to head lift solenoid during carriage return and line feed.
LNFDQ	line feed	indicates printer doing line feed
PBUSY–	printer busy	low level indicates printer control will not accept print commands; high level indicates printer is idle.
PGO–	printer go	negative-going start pulse from character decode; stores DCR, DBS, DLF, and CNTRL– inputs in synchronous input register.
PNHCLK	punch clock	12.8 kHz square wave
PPHSA	paper phase A	
PPHSB	paper phase B	
PPHSC	paper phase C	high level on an output enables paper drive stepping motor power driver for corresponding phase.
PRINT	print	positive-going 10 msec wide pulse, enables compensation circuit to apply power to printhead.
PRINTPLS	print pulse	print pulse time (= 10 msec)
PRNLOC–	printer local	low when printer in local loop, high when on-line; provided in ASR units only.
PRNPRD–	printer period	low level indicates printer control will not accept command inputs; goes low for 1 character period (30 msec) after receipt of PGO– or an asynchronous input; remains low for 2 character periods when line feed is double space.
PWRRST–	power reset	low level for approximately 400 msec after power on; initializes registers so that paper advances with failsafe carriage return immediately after PWRRST– goes high.
RETURN		indicates printer doing carriage return

SLOT A-2 PRINTER CONTROL (CONCLUDED)

RHLS–	right-hand limit switch	approximately 0V when head at right margin (column 81); approximately +2V at all other times; is a redundant function, providing auto carriage return from right margin if column counter malfunctions.
SELECTA	select A	signal to select motor phase A after carriage returns to left margin
TPBKSPC–	tape backspace	negative-going 1.25 msec pulse when TAPE key depressed; if printhead in local loop, printhead backspaces (if not at left margin)
TPFWD–	tape forward space	negative-going 1.25 msec pulse when TAPE key depressed; if printer in local loop and printhead not at right margin, head spaces forward; space inhibited at right margin but auto carriage return is performed.

SLOT A-3. ANSWER-BACK MEMORY (ABM)

Signature	Definition	Function
ABMCLR–	answer-back clear	clears all ABM logic
ABMTRIGRST–	ABM trigger reset	disables triggering of ABM
ABMSTP	ABM stop	ends and resets ABM
AUX1ROF	auxiliary-1 remote OFF	remote off
AUX2ENAR–	auxiliary-2 enable to receive	data on bus to AUX2
AUX2ENAS–	auxiliary-2 enable to send	data on bus from AUX2
AUX2ENASQ–	auxiliary-2 enable to send Q	signifies AUX2ENAS– has been received (synched with RDRCLK)
AUX2REQ–	auxiliary request	holds a clear on the ABM logic
AUX2ROF	auxiliary-2 remote off	800 Hz
C800	clock 800	decoded Baudot 'D' code
D–	letter 'D'	serial data bus
DATA–		enquiry decode (from the line)
ENQRY	enquiry	decoded Baudot figure code
FIGQ–	figures	used as remote ABM trigger line
FSTIME–	first time	from keyboard
HEREIS–	here is	HERE IS decode
HEREISQ	here is Q	also a remote off function
KBDON	keyboard on	
PRNROF–	printer remote off	
PWRRST–	power reset	
RDRCLK	reader clock	204.8 kHz
RECROF–	recorder remote off	stop enables to recorder
SCLK–	system clock	clocks data on serial bus
SRVENA–	serial receiver enable	data on bus from serial receiver
STOQ	state ZERO	ABM state controller wait state
ST1Q	state 1	loads memory data to output register and sends out AUX2REQ
ST2Q	state 2	wait for enable (AUX2ENAS–)
TERLINE–	terminal on-line	logic low when terminal is on-line

SLOT A-4. TERMINAL CONTROL

Signature	Definition	Function
AUX1BUSY–	auxiliary-1 busy	
AUX1ENAR–	auxiliary-1 enable to receive	data on bus to AUX1
AUX1ENAS–	auxiliary-1 enable to send	data on bus is from AUX-1
AUX1LOC–	auxiliary-1 local	
AUX1REQ–	auxiliary-1 request	
AUX2ENAR–	auxiliary-2 enable to receive	enable the data on bus to AUX-2
AUX2ENAS–	auxiliary-2 enable to send	the data on the bus is from AUX-2
AUX2LOC–	auxiliary-2 local	
AUX2REQ–	auxiliary-2 request	
AX1AX2DR–	auxiliary-1 and -2 to receive D input	
BOEOCA2	BOT, EOT, cassette-2	clear leader on cassette-2
BOEOCA1	BOT, EOT, cassette-1	clear leader on cassette-1
BUFRREQ–	buffer request	for print buffer command
CL1–	clock one	clocks enable D's to enable registers
DATA–		data on serial data bus
DATLOC–	local data	data on bus is for local loop
ENABLE		enables D inputs to enable registers
FSTIME–	first time	'blinds' terminal to incoming data
FULDPX–	full duplex	
KBDENA–	keyboard enable	data on bus is from keyboard
KBDLOC–	keyboard local	keyboard is in local mode
KBDREQ–	keyboard request	keyboard requests to send data
LINBUSY–	line busy	transmitter busy
LOCBUSY	local busy	local loop busy
PAPOUT–	paper out	printing supply roll exhausted
PBUSY–	printer busy	print time (30 msec) or carriage return time (190 msec)
PNHCLK	punch clock	12.8 kHz
PRNENA–	printer enable	data on bus to printer to
PRNLOC–	printer local	printer is in local mode
PRNPRD–	printer period	30 msec per character busy timer from printer
PRNROF–	printer remote off	remotely inhibit the printer from receiving data
PWRRST–	power reset	
RCBFFL–	record buffer full	
RCVRQCL–	receiver request clear	
RDRCLK	reader clock	204.8 kHz master system clock
RDRENA–	reader enable	data on the bus is from playback
RDRLINE–	reader on-line	
RDRREQ–	reader request	reader requests to send data
RDROF–	reader remote off	remotely inhibit the reader from sending data
RECENA–	recorder enable	enable data on bus to/from recorder
RECLINE–	recorder on-line	
RECROF–	recorder remote off	remotely inhibit the record operation
RERROR	reader error	playback read error
RFEED	reader feed	playback busy
SCLK–	system clock	clocks data on serial data bus
SRVENA–	serial receiver enable	data on bus is from receiver
SRVREQ–	serial receiver request	
STAENA–	status enable	data on bus is status

SLOT A-4 TERMINAL CONTROL (CONCLUDED)

STATUSINH–	status inhibit	inhibits a status enable
TCCK	terminal control clock	
TCST1	terminal control state 1	ENABLE and SCLK state
TERLINE–	terminal on-line	
XMTENA–	transmit enable	data on bus to transmitter

SLOT A-5. TRANSMIT/RECEIVE (300 & 1200 baud)
(Slot A-8 is 1200 baud transmitter)

Signature	Definition	Function
BELCLK	bell clock	3.2-kHz bell tone
BIT9	bit 9	signifies that a whole character has been received from the line
BIT9Q	bit 9Q	enables a SRVREQ to be sent
BREAK–	break	from keyboard, sends space to LINE
BUSYRST–	busy reset	resets LINBUSY
BYCLK	busy clock	6.4 kHz
CHRTIMECK–	characters time clock	signifies a character has been transmitted
CLEAR	clear	resets receiver
C800	800 Hz clock	800 Hz
DATA–		serial data bus
EIACTS	EIA clear to send	transmitter control
EIADATIN	EIA data in	EIA input data from line
EIADOT	EIA data out	EIA output data to line
EIADCD	EIA data carrier detect	receiver control
EIADSR	EIA data set ready	transmitter/receiver control
EIADTR	EIA data terminal ready	held high by terminal
EIAGRD	EIA ground	
EIARTS	EIA request to send	held high by terminal
EXTCKIN	external clock in	test input
FIFOMR–	first-in first-out memory reset	resets FIFO memory
FULDPX–	full duplex	a terminal status
HSPEED	high speed	1200 baud
INHXMT–	inhibit transmitter	holds output line to a mark
INPUTRDY	input ready	FIFO memory ready to accept a character
INTCKINH	internal clock inhibit	test output
LATCHDAT	latch data	used by receiver reset latch
LINBUSY–	line busy	transmitter busy, 300 baud; FIFO full, 1200 baud
OUTPUTRDY	output ready	signifies a character at the FIFO memory output
PARITY	parity	'parity bit' for transmit data
PBUSY–	printer busy	signifies printer busy for 30 msec per character or 190 msec per carriage return
PNHCLK	punch clock	12.8 kHz
PWRCLK	power clock	51.2 kHz to power supply switching regulators
PWRRST–	power reset	
QSIENA	shift-in enable	
QXMTRDY–	transmitter ready	holds down LINBUSY in half-duplex in low-speed operation
RBIT1–	receiver bit 1	least significant bit
RBIT2–	receiver bit 2	
RBIT3–	receiver bit 3	
RBIT4–	receiver bit 4	

SLOT A-5 TRANSMIT/RECEIVE (CONCLUDED)

RBIT5–	receiver bit 5	
RBIT6–	receiver bit 6	
RBIT7–	receiver bit 7	
RBITP–	receiver bit P	most significant bit
RCVDATA	receiver data	EIA data input converted to TTL data
RCVHDPX	receiver in half duplex	inhibits transmitter
RCVENA	receiver enable	data set is ready and data carrier is present
RDCLK	reader clock	204.8 kHz
REQENA–	request enable	enables bit-9 flipflop
RERROR	reader error	playback read error
RESET	reset	resets receiver, also signifies a character is being received
RFEED	reader feed	playback busy
RSTCHRTIMER	reset character timer	resets character bit counter
RTSDELAYENA	request to send delay enable	enables 20 msec request-to-send delay
SCLK–	system clock	clocks data on bus
SHIFTIN	shift in	enter character into FIFO input buffer
SHIFTOUT	shift out	put next character into FIFO output buffer
SRVCLK	serial receiver clock	SRVCLK = 64 • XMTCLK
SRVDAT	serial receiver data	receiver serial data bus data
SRVENA–	serial receiver enable	data on bus from receiver
SRVLOAD–	serial receiver load	loads input data into serial data bus output register
SRVREQ–	serial receiver request	
STRBIT–	start bit	'start bit' for transmit data
TCST1	terminal control state 1	enable and SCLK state
TERLINE–	terminal on-line	
TTYDATIN	TTY data in	
TTYDATOT	TTY data out	
XMTBSY	transmitter busy	transmitter sending data to outside line
XMTENA–	transmit enable	data on bus to transmitter
XMTCLK	transmit clock	clocks data to outside line
XMTHDPX–	transmit in half duplex	'locks out' receiver
XMTINH	transmitter inhibit	'blinds' transmitter to serial data bus
XMTRCVCLK	transmit/receive clock	XMTRCVCLK = SRVCLK • 2
XMTRST–	transmitter reset	resets transmit and receive busy indicators
10CPS	10 characters per second	signifies transmit speed of 10 CPS
32CLK	32 clock	clocks received data to input register

SLOT A-6. AUTO DEVICE CONTROL (OPTION)

Signature	Definition	Function
CDBIT1–	code bit 1	least significant code bit to Remote Cassette
CDBIT2–	code bit 2	Control Card
CDBIT3–	code bit 3	
CDBIT4–	code bit 4	most significant bit
CDSTB–	code bit strobe 1	for remote cassette control
DATA–		serial data bus
DATLOC–	data local	data on bus is for local loop
DC1–		playback on
DC2–		record on
DC3–		playback off

SLOT A-6 AUTO DEVICE CONTROL (CONCLUDED)

DC4–		record off
PWRRST–	power reset	
RCDLINE–	recorder on-line	
RDRCLK	reader clock	204.8 kHz
RDLINE–	reader on-line	
SCLK–	serial clock	clocks data on serial bus
SRVENA–	serial receiver enable	data on bus from receiver
XMTENA–	transmitter enable	data on bus to transmitter

SLOT A-6 REMOTE DEVICE CONTROL (OPTION)

Signature	Definition	Function
ASCCANQ	ASC cancel Q	decode for ASC to cancel search
ASCSRCH-	ASC search	indicates ASC card has tape search in progress
AUX1DAT	auxiliary-1 data	data to serial bus from auxiliary-1
AUX1ENAS-	auxiliary-1 enable to send	data on bus is from auxiliary-1
AUX1REQ-	auxiliary-1 request	request from auxiliary-1 to terminal control to send data on serial bus
AUX1ROF-	auxiliary-1 remote off	optional line for inhibiting RDC
AUX2ROF-	auxiliary-2 remote off	logic ZERO holds ABM in reset state
BLKFWDQ	block forward Q	initiates block forward function
BLKREVQ	block reverse Q	initiates block reverse function
BOEOCA1	BOT and EOT cassette-1	cassette-1 is on clear leader
BOEOCA2	BOT and EOT cassette-2	cassette-2 is on clear leader
CANCLR-	cancel clear	clears CAN flipflop
CANDAT-	cancel data	data from CAN character register
CANENA	cancel enable	enables CAN character register
CANRSTENA	cancel reset enable	enable to reset CAN character flipflop
CAS1RCDQ	cassette-1 record Q	initiates mode switch to cassette-1 record
CAS2RCDQ	cassette-2 record Q	initiates mode switch to cassette-2 record
CCUNIT2	call control unit 2	spare line to jumper ABM-off signal to PC card slots A-7 and A-8
CCUNIT4	call control unit 4	spare line to jumper FSTIME- signal to PC card slots A-7 or A-8
CDBIT1-	code bit 1	1 of 4 parallel cassette control bits
CDSTRB-	code strobe	strobe for 4 parallel control bits
C800	clock 800 Hz	800-Hz system clock
DATA-	data	internal serial data bus
DATLOC-	data local	data on bus is local data
DC1Q	DC1Q	initiates playback-ON function
DC2Q	DC2Q	initiates record-ON function
DC3Q	DC3Q	initiates playback-OFF function
DC4Q	DC4Q	initiates record-OFF function
DC13ENA-	DC1 and DC3 enable	depends on five pencil switch settings
DC1-4-OFF-	DC1 through DC4 OFF	disables DC1 through DC4 functions on received data
DC1-4-ON-	DC1 through DC4 ON	resets DC1 through 4 OFF command
DC24-ENA-	DC2 and DC4 enable	depends on five pencil-switch settings
DLE-	data link escape	decodes first character of two-character sequence
EOT-	EOT	decodes 300-baud auto answer disconnect code
ESCQ	escape Q	indicates first character of double-character code sequence is decoded
FOOTSWITCH-	footswitch	input line for local footswitch (initiates local DC1 function)
FSTIME-	first time	"blinds" terminal to received data when at logic ZERO
FTSWD	footswitch-D	causes DC1 function to be initiated at next TIMEQ0 time

SLOT A-6 REMOTE DEVICE CONTROL (OPTION)

Signature	Definition	Function
KBDENA-	keyboard enable	data on bus from keyboard
KBDLOC-	keyboard local	
KBPA-	keyboard paper advance	from PAPER ADVance switch on keyboard
LOAD1Q	load cassette 1 Q	initiates loading of cassette 1
LOAD2Q	load cassette 2 Q	initiates loading of cassette 2
LINBUSY-	line busy	indicates to terminal control the transmitter is busy
MODL2	modem line 2	spare line to PC card slots A-7 or A-8
PBKON-	playback ON	logic ZERO indicates playback is on
PRNROF-	printer remote OFF	when logic ZERO, printer does not receive enables from terminal control
PRNOF-	printer off	printer-off decode
PRNOFF-	printer off	PRINTER LINE/OFF/LOCAL switch is in OFF position
PRNOFQ	printer off Q	causes printer to be inhibited via PRNROF- line
PRNON-	printer ON	printer-on decode
PRNRDY	printer ready	status bit indicates printer is on-line and ready
PWRRST-	power reset	resets RDC card logic during power up or after power failure
PWRRST1-	power reset 1	indicates power reset or RDC off
PWRRST2-	power reset 2	indicates power reset, RDC off, or terminal not on-line
RCVCLK	receive clock	5-μsec pulse at time Q0 on each SRVENA- signal (signifies stable received data)
RCVEOT-	receive EOT	300-baud auto answer disconnect decode output
RDCBIT1	RDC bit 1	input data bit from data bus (least significant bit)
RDCOFF-	RDC off	manual switch on card is in OFF position (logic ZERO)
RDRCLK	reader clock	master system clock (205.8 kHz)
RDRENA-	reader enable	data on bus is from playback
RDRLINE-	reader on-line	playback is on-line and ready
RDRRDY	reader ready	indicates playback is ready
RDRROF-	reader remote off	inhibits playback from sending data to bus
RECLINE-	record on-line	recorder is on-line and ready
RERROR	reader error	playback-error detected
REW1Q	rewind cassette 1 Q	initiates rewind of cassette 1
REW2Q	rewind cassette 2 Q	initiates rewind of cassette 2
RFEED	reader feed	playback is on (busy)
RMTCAN-	remote cancel	causes remote cancel of ASC search when logic ZERO
RMTENA-	remote enable	enables received line data to ASC for remote search
SCLK-	serial clock	clocks data on serial data bus
SPARE	spare line	spare line to card slots A-7 or A-8
SRCHLN	search line	indicates a remote line search
SRCHLOC	search local	indicates a local search
SRVENA-	send receive enable	data on bus is from send receive
STADAT-	status data	data from status register
STAENA	status enable	enables status register
STAENA-	status enable	data on bus is status
STAT-	status	decode request for status character
STATUSQ	status Q	indicates request for status has been decoded

SLOT A-6 REMOTE DEVICE CONTROL (Concluded)

Signature	Definition	Function
TCST1	terminal control state-ONE	terminal control device enable time
TERLINE-	terminal on-line	from terminal ON-LINE switch, logic ZERO when the terminal is on line
TIMEQ0D	time QOD	clears CAN flipflop
TIMEQ0	time QO	indicates input data to RDC is stable
TIMEQ4	time Q4	time at which strobe (CDSTROB-) is sent to ASR unit
TIMEQ5	time Q5	request (AUX1REQ-) is sent to terminal control
TIMEQ6	time Q6	clears status flipflop
TTYDATIN	TTY data in	spare line to A-7 or A-8
TTYDATOT	TTY data out	spare line to A-7 or A-8
XMTENA-	transmit enable	data on bus is for transmitter
XMTINH-	transmitter inhibit	when logic ZERO inhibits data from entering the transmitter
1200BPRNLOC-	1200-baud print local	decode for 1200-baud print-local function

SLOT A-7 AUTOMATIC SEARCH CONTROL (OPTION)

Signature	Definition	Function
ASCLR	ASC clear	clears ASC functions and forces ROM control into its quasi state; this sequence automatically issues a playback-off code and strobe and forces a paper advance if the playback is not on-line.
ASCSRCH	ASC search	ROM control line, indicates ASC is in search mode.
CDMW	cassette data memory-write	pulse on the cassette data RAM, loads the data from the buffer register.
CHRDY	character ready	indicates a serial-to-parallel conversion has taken place.
CHROK	character is OK	indicates that character is ready and printable.
CONCHR	control character decode	inhibits PRNCHR.
CPRFG	compare flag	logic signal to the processor, signifies that the last match was positive; is a flipflop output.
DECSFMA	decrement search-field memory-address register	decrements the search-field RAM address register.
DELETE	decoded "delete" character	inhibits PRNCHR.
DKEYFLG	D input to KEYFLG flipflop	allows KEYFLG flipflop to set on next CHROK pulse.
ENACHRDY	enable character-ready	allows CHRDY to set on falling edge of TCST1.
ENAPLAYOFF	enable playback OFF	ROM control line, sets up the playback-off code (DC3) and sends the code strobe.
INCADR	increment the compare address register	increments the counter which points to the beginning character in the cassette data memory.
INCDRAR	increment cassette-data RAM address register	increments the contents of the cassette data RAM address register.
INCSFMA	increment search-field memory address register	increments the search field memory address register.

SLOT A-7 AUTOMATIC SEARCH CONTROL (Concluded)

Signature	Definition	Function
KENA	keyboard enable	ROM output line, gates KBDENA input to CHRDY logic.
KEYFLG	indicates that the last transaction was a data input to search-field RAM.	forces the ROM controller to search on the new search field.
MATCH		signal to logic processor that one search field and cassette data character compare.
PAA through PAE	present-address bit A, bits A through E	ROM address register output bits A through E.
PADE	present-address bits D and E	output of the logic gate that NANDs present-address bits D and E.
PBKON	playback is on	signal to processor, indicates playback cassette is ON.
PRNCHR	printable character	gated decoder output that passes CHROK.
RENA	reader enable allow	ROM output line, gates RDRENA input to CHRDY logic.
RMTCAN	remote cancel	signal from Remote Device Control PC card, indicates reception of remote cancel code.
RMTENA	remote enable	signal from Remote Device PC card, indicates a data reception from the line.
SBT	stop bit	indicates the last character in the search field.
SELA	select A	bit A of a coded 2-bit field, selects to the ROM address registers: PA, J0, J1, or J2.
SFMAOF	search field-memory-address overflow	carry output of search field memory address register.
SFMAUF	search field-memory-address underflow	borrow output of search field memory address register.
SFMW	search field memory-write	pulse applied to the search field memory to load parallel data from the buffer register.
SINCHRFG	single-character flag	output of a flag flipflop, signifies that search field will be only one character wide.
XCFACDRA	transfers compare field address to the cassette data memory address	transfers the contents of the compare field address counter to the cassette data ROM address register.
XSFASSFA	transfer search field address-counter (actually N) to the search field address-counter store register.	causes a temporary register to store the length of the search field address field (N).
XSSFASF	transfer stored search field-address to search-field register	transfers the contents of the temporary search field storage register to the working search field RAM address register.
ZCADR	zero compare field address register	clears contents of compare field address register.
ZCDRAR	zero cassette-data RAM address register	clears the contents of the cassette data RAM address register.
ZCHRDY	zero character ready	clears CHRDY flipflop.
ZSFMA	zero search-field memory address	clears search field RAM address.

SLOT A-7 OR A-8 AUTO ANSWER CONTROL, 300 BAUD (OPTION)

Signature	Definition	Function
AA103ARST	auto answer 103 reset	resets Auto Answer PC card logic
ABMTRIG–	answer-back memory trigger	remote trigger to ABM PC card
AUX2ROF–	auxiliary-2 remote OFF	When low, a clear is held on the ABM card (if installed); this signal to the ABM must be jumpered through the RDC card to be operational. CCUNIT2 is a spare MB run used to transmit AUX2ROF signal from slot A6 to slots A7 and A8
CCT	coupler cut-through	signals that the input lines to the DAA have been connected to the communication line
C800	clock 800	800-Hz clock
C80MS	clock 80 msec	80-msec clock for timer
DSRDRCLK	data-set reader clock	buffered RDRCLK
EIADATIN	EIA data in	EIA received data from the communication line
EIADCD	EIA data-carrier detect	carrier being detected either by Bell 103 Data Set or by internal modem
EIADSR	EIA data-set ready	signals that data set is ready for operation (from Bell 103 Data Set)
EIAGRD	EIA ground	
FSTIME–	first time	when low, all receiving devices in the terminal are blinded to received data; this signal must be jumpered through the RDC card to be operational. CCUNIT4 is a spare run used to transmit FSTIME– signal from slot A6 to slots A7 and A8
LINBUSY–	line busy	signals terminal control that transmitter is busy or receiver is busy (HALF-DUPLEX only)
LINRDY–	line ready	line to option display panel lamp: illuminates when communication line is ready for data transfer
LINDATAQ	line data Q	TTL-level received data from the communication line, synched with RDRCLK
NXTST0	next state 0	call to be disconnected on next RDRCLK
OH/DTR	off hook/data terminal ready	goes high (> 3 V) to answer an incoming call; goes low (< -3 V) to disconnect a call
PWRRST–	power reset	master terminal-reset upon power-on or power failure
RCVEOT	receive EOT	from RDC card; signifies EOT characters received from the line
RDRCLK	reader clock	204.8 kHz
RI	ring indicator	signals incoming call for Bell 103 Data Set or CBS DAA
RNGIND–	ring-indicator lamp	line to option display panel lamp: follows incoming ring indicator (RI) until call is answered; remains on after call is answered until line is ready for communication
ST0Q	state-zero Q	wait state, no call in progress
ST1Q	state-1 Q	call answered and data-set-ready indication received; wait for carrier-detect indication and then trigger ABM
ST2Q	state-2 Q	carrier-detect indication received, wait for ABM-delay time
ST3Q	state-3 Q	ABM delay time completed, bring down the line-busy indication (send ABM data) and wait for a disconnect condition (carrier loss, long space, receive EOT)
TD10.24SEC	time delay 10.24 seconds	10.24-second delay from timer, used for wrong number disconnect
TD1.28SEC	time delay 1.28 seconds	1.28-second delay from timer, used for long space disconnect

SLOT A-7 OR A-8 AUTO ANSWER CONTROL (CONCLUDED)

Signature	Definition	Function
TD80MS	time delay 80 milliseconds	80-msec delay from timer, used for long space disconnect
TERLINE–	terminal on-line	from terminal ON-LINE switch, line is low when terminal is on-line
TERMRDY–	terminal ready	line to option display panel lamp; illuminates when terminal is on-line and thus ready to answer a call
TIMERRST	timer reset	reset delay timer
TTLDCD	TTL data-carrier detect	TTL-level data carrier detect indication; synched with RDRCLK
TTLDSR	TTL data-set ready	TTL-level data set ready indication; synched with RDRCLK
TTLDTR	TTL data terminal ready	TTL-level data terminal ready output; governs connect/disconnect of DAA or 103 systems communication lines
TTLRNG	TTL ring	TTL-level ring indicator; synched with RDRCLK

SLOT A-8. TTY LINE INTERFACE

Signature	Definition	Function
EIACTS	EIA clear to send	tied to + 5 volts
EIADCD	EIA data carrier detect	tied to + 5 volts
EIADSR	EIA data set ready	tied to + 5 volts
TTYDATIN	Teletype interface data in	TTL data from Teletype interface to serial receiver
TTYDATOT	Teletype interface data out	TTL data from serial transmitter to TTY output circuit
TTYL1	Teletype interface line 1	receiver line for neutral or polar
TTYL2	Teletype interface line 2	receiver common for neutral receiver and transmit common for polar
TTYL3	Teletype interface line 3	transmitter line for neutral or polar
TTYL4	Teletype interface line 4	transmitter line for neutral or polar

SLOT A-8. MODEM LINE INTERFACE

Signature	Definition	Function
EIACTS	EIA clear to send	tied to + 12 volts by modem
EIADATIN	EIA data in	EIA (±12 V) data sent from modem to serial receiver
EIADATOT	EIA data out	EIA (±12 V) data sent from serial transmitter to modem
EIADCD	EIA data carrier detect	goes high (+12 V) 150 msec after modem senses in-band signal; goes low (-12 V) 100 msec after modem loses in-band signal
EIADSR	EIA data set ready	tied to + 12 volts by modem
MODL1	modem line 1	communication line
MODL2	modem line 2	communication line

SLOT A-9. CONTROL REGULATOR

Signature	Definition	Function
NEG12V	negative 12 volts	-12 volt supply
NEG18V	negative 18 volts	-18 Vdc from ac power assembly
POS18V	positive 18 volts	+18 Vdc from ac power assembly
POS5VCROWBAR	5 volt crowbar	shuts down regulator if + 5 voltage is too high
POS5VOL	5-volt overload	current limit for 5 volts
POS5VREF/AUX	positive 5 volts reference/auxiliary	reference/auxiliary + 5 voltage supply to power + 5 volt regulator
POS5VREGDR	5-volt regulator drive	switches on + 5 volt regulator
POS5VREGNA	5-volt regulator enable	shuts down + 5 volt regulator if clocks are lost
POS5VSENSE	positive 5-volt sense	tied to + 5 volt supply
POS12V	positive 12 volts	+ 12 volt supply
POS33V	positive 33 volts	33 Vdc from ac power assembly
POS33VUNFIL	positive 33 volts unfiltered	33 volts rectified but unfiltered from ac power assembly
PWRCLK	power clock	51.2 kHz reference clock from transmit/receive
PWRRST–	power reset	goes low for approx. 600 msec when power is first applied

SLOT A-10. REGULATOR/AMPLIFIER

Signature	Definition	Function
HDSOLDR	head solenoid drive	drive for head lift solenoid
HDSOLDRET	head solenoid return	return path from head solenoid
HMRET	head motor return	return path for head-stepping current
HPC	head power control	controls current to head-stepping motor
HPHA	head phase A	drive to ϕ A of head-stepping motor
HPHB	head phase B	drive to ϕ B of head-stepping motor
HPHC	head phase C	drive to ϕ C of head-stepping motor
HPHSA	head phase select A	printer control signal, selects phase A of head-stepping motor
HPHSB	head phase select B	printer control signal, selects phase B of head-stepping motor
HPHSC	head phase select C	printer control signal, selects phase C of head-stepping motor
LIFTHEAD	lift head	printer control command to energize head lift solenoid
PACA	paper advance control	controls current to paper stepping motor
PMRET	paper motor return	return path for paper stepping current
POS5V	positive 5 volts	5-volt supply
POS5VOVL	5-volt overload	limits current
POS5VREF/AUX	5-volt reference/auxiliary	auxiliary 5-volt supply from control/regulator
POS5VREGDR	5-volt regulator drive	control regulator signal, switches on regulator
PPHA	paper phase A	drive to ϕ A of paper-stepping motor
PPHB	paper phase b	drive to ϕ B of paper-stepping motor
PPHC	paper phase C	drive to ϕ C of paper-stepping motor
PPHSA	paper phase select A	printer control signal, selects ϕ A of paper-stepping motor
PPHSB	paper phase select B	printer control signal, selects ϕ B of paper-stepping motor
PPHSC	paper phase select C	printer control signal, selects ϕ C of paper-stepping motor
PWRRST	power reset	goes low for approx. 600 msec after power is applied

SLOT XA1. PRINTHEAD INTERFACE.

This PC card is located on the left side of the terminal between the keyboard and the KSR card rack. The Printhead Interface PC card interconnects the Printer Code PC card (slot A-1) and the printhead. Don't confuse this XA1 number with the ASR (upper unit) XA1 Display PC card.

SLOT XA1. PRINTHEAD INTERFACE

Signature	Definition	Function
DGRND	diode ground	return path for diode current
DVOLT	diode voltage	temperature-compensating diode voltage
ELM8	element 8	base drive to printhead element 8
HDRS1	head resistor select-1	slow resistor voltage
HDRS2	head resistor select-2	fast resistor voltage
PHBFRCLR–	printhead buffer clear	removes base drive to all printhead elements
PHCHR	printhead character	data clocked into head buffer
PHCLK	printhead clock	clocks data into head buffer
PVOLT	print voltage	supply voltage to printhead

ASR (UPPER UNIT) PC CARDS

SLOT XA-1. DISPLAY

Signature	Definition	Function
BOEOCA2	beginning and end of cassette-2	indicates when tape is on clear leader
CA2RDY	cassette-2 ready	indicates cassette-2 is ready to send or receive data
CNFMT	continuous format	places recorder in continuous format
C1RCD	cassette-1 record	indicates cassette-1 is in record mode
DATA–	data	serial data bus
DCHBIT8	display character bit 8	signal to LED display for bit 8 of last character in record buffer
KBDLOC–	keyboard local	indicates keyboard is in local mode
KBDON	keyboard on	indicates keyboard is not in off mode
PNHONQ	punch on Q	indicates recorder is not in overpunch mode
PNHRDY	punch ready	indicates recorder on and ready to receive data
PRNLOC–	printer local	indicates printer in local mode
PRNOFF	printer off	indicates printer in off mode
RCBFFL–	record buffer full	indicates when record buffer full and cannot accept more data
RCDON	recorder on	signal from switch which turns on recorder
RCDSTP	recorder stop	signal from switch which turns off recorder
RDROF–	reader off	stops playback operation
RDRON–	reader on	starts continuous playback operation
RERROR	reader error	indicates data dropout on tape
RFEED	reader feed	indicates playback is on
SCLK–	serial clock	clocks out status information to bus
STAENA	status enable	enables status register to send status information to data bus
TERLINE–	terminal on-line	indicates when terminal is on line
XBSPRV	switch block space reverse	signal from switch to initiate block reverse
XERASE	switch erase	signal from switch to clear record buffer or erase tape
XBSPFW	switch block space forward	signal from switch to initiate block forward
XC2RCD	switch cassette-2 record	signal from switch putting cassette-2 in record mode
XLD/FW2	switch load/fast forward 2	command from switch to load or fast forward cassette-2
XPBKLN	switch playback line	switch signal to put playback on line
XPBKOF	switch playback off	switch signal to turn playback off
XPRNBOF	switch print buffer	signal from switch to print out contents of record buffer
XRCDLN	switch recorder line	signal from switch placing recorder on line
XRCDOF	switch recorder off	signal from switch placing recorder in off mode
XRCHFW	switch read character forward	signal from switch to read 1 character
XREW2	switch rewind 2	command from switch to rewind cassette-2
XSTPCA2	switch stop cassette 2	command from switch to stop rewind, load, or fast forward cassette-2

SLOT XA-2 TAPE MOTION CONTROL

Signature	Definition	Function
BOEOCA1	BOT and EOT on cassette-1	clear leader on transport-1
BOT1	beginning-of-tape 1	goes high when BOT sensor does not sense mag tape on transport-1
CA1RDY	cassette-1 ready	indicates cassette-1 loaded and ready
C1BUSY	cassette-1 busy	indicates cassette-1 busy

SLOT XA-2 TAPE MOTION CONTROL (CONCLUDED)

C1CNTLDA	cassette-1 count load	load signal to cassette-1 gap counter
C1CNTDN	cassette-1 countdown	tells gap counter to count up for forward or down for reverse
C1CNTQ	cassette-1 count Q	indicates gap complete
C1FWQ	cassette-1 fast forward Q	set high when LOAD switch depressed while not on clear leader
C1INPLACE	cassette-1 in place	indicates cassette-1 in place and door closed
C1RCD	cassette-1 record	indicates cassette-1 in record mode
C1RWQ	cassette-1 rewind Q	set when REWIND switch is depressed
EOT1	end-of-tape 1	goes high when EOT sensor does not sense mag tape on transport-1
EOT1Q	end of tape 1 Q	syncronized EOT signal
GAP1Q	gap 1 Q	set high after LDBOT1Q set and BOT sensed
LDBOT1Q	load BOT 1 Q	set high after LOAD1Q and mag tape is reached
LOAD1Q	load 1 Q	set high when LOAD switch depressed while not on clear leader
PNHRDY	punch ready	indicates recorder loaded and ready
PWRRST–	power reset	goes low for approx. 600 msec after power is applied
RDLINE	reader line	indicates playback is on line and ready
RDRRDY	reader ready	indicates playback loaded and ready
READCK	read clock	204.8 kHz square wave
RECLINE	recorder line	indicates recorder is on line and ready
TERLINE–	terminal on-line	terminal is on line
TPRQO	tape read Q zero	command to move tape forward in READ mode
TPWFW	tape write forward	command to put tape in write or forward mode
T1FAST	transport-1 fast	command to put transport-1 in fast mode
T1FWD	transport-1 forward	signal puts transport-1 in FORWARD mode
T1LEQ	transport-1 left end Q	set when tape is on left end
T1REQ	transport-1 right end Q	set when tape is on right end
T1REV	transport-1 reverse	signal puts transport-1 in REVERSE mode
T1WRITE	transport-1 write	signal sent to transport-1 enabling write head
WRTTAB1	write tab 1	indicates presence of write enable TAB on transport-1
XLD/FW1	switch load/fast forward 1	switch command to load or fast forward cassette-1
XPBKLN	switch playback line	signal from switch to put playback on line
XPBKOF	switch playback off	signal from switch putting playback in OFF mode
XRCDLN	switch recorder line	signal from switch to put recorder on line
XRCDOF	switch recorder off	signal from switch putting recorder in OFF mode
XREW1	switch rewind 1	switch command to rewind cassette-1
XSTPCA1	switch stop cassette 1	switch command to stop rewind, load, or fast forward cassette-1

SLOT XA-3. REMOTE CASSETTE CONTROL

Signature	Definition	Function
BBKSPQ	block backspace	initiates a block reverse
BFWSPQ	block forward space	initiates a block forward
BLCNDN	block countdown	load gap counter for record transport to write a gap
BREVQ1	block reverse state 1	block reverse in progress
BREVQ2	block reverse state 2	data block detected
BREVQ3	block reverse state 3	gap detected
CDBIT1	code bit 1	1 of 4 parallel control bits
CDSTB	code strobe	strobe for 4 parallel control bits

SLOT XA-3. REMOTE CASSETTE CONTROL (CONCLUDED)

CNTQ	count	signifies gap has been written by record unit
C1BUSY	cassette-1 busy	playback, record, tape erase, or block reverse in progress on transport-1
C2BUSY	cassette-2 busy	playback, record, tape erase, or block reverse in progress on transport-2
C1CNTDN	cassette-1 countdown	signals gap counter-1 to countdown during block reverse
C2CNTDN	cassette-2 countdown	signals gap counter-2 to countdown during block reverse
C1CNTLD	cassette-1 load	load transport-1 gap counters
C2CNTLD	cassette-2 load	load transport-2 gap counters
C1CNTQ	cassette-1 count	terminates loading of transport-1
C2CNTQ	cassette-2 count	terminates loading of transport-2
C1CNTLDA	cassette-1 count load	load signal to transport-1 gap counters
C2CNTLDA	cassette-2 count load	load signal to transport-2 gap counters
C1RCD	cassette-1 record	cassette-1 is in record mode
C1R2BUSY	cassette-1 or -2 busy	
DETBLK	detect block	block detected
KBDLOC	keyboard local	keyboard is in local mode
KBDON	keyboard on	
PBKBUSY	playback busy	playback on or block reverse in progress
PNHONQ	punch on	signifies recorder is on
PNHRDY	punch ready	recorder ready to record
RCDBUSY	recorder busy	recorder on or tape erase in progress
RCDOF	record off	remote record off line
RCDON	record on	remote record on line
RCDSTP	record stop	stops tape erase or record controller
RDRLINE	reader line	playback is on line
RDROF	reader off	remote reader is off line
RDRON	reader on	remote reader is on line
RDRSTQ	reader start	initiates continuous read operation
RDRRDY	reader ready	playback is ready
READCK	reader clock	204.8 kHz
RERRORQ	reader error	read error detected
REVDLY	reverse delay	signifies 64 tach pulses counted after gap detected
RFEED	reader feed	playback is reading a block from tape or transmitting data to bus
TPERSQ	tape erase	tape erase operation in progress
TREBLK	tape read block	signifies tape in interblock gap
TRFCLKB	transport reference clock B	1.0667 kHz used to count block reverse delay
TR1/4T	tape read 1/4T	signifies middle of data bit time
TR3/4T	tape read 3/4T	signifies middle of phase bit time
TR5/4T	tape read 5/4T	signifies bit dropout
TR21/4T	tape read 21/4T	signifies gap on tape
T1TACH	transport-1 tach	tach feedback from transport 1
T2TACH	transport-2 tach	tach feedback from transport 2
XBSPFW	switch block space forward	switch command to perform block forward
XBSPRV	switch block space reverse	switch command to perform block reverse
XC1RCD	switch cassette-1 record	switch command to place cassette-1 in record mode
XERASE	switch erase	switch command to erase tape or record buffer
XLD/FW1	switch load/fast forward 1	command to load or fast forward cassette 1
XRCHFW	switch read character forward	switch command to perform character forward
XREW1	switch rewind 1	command to rewind cassette 1
XSTPCA2	switch stop cassette 2	stops rewind, load, or fast forward on cassette 2

SLOT XA-4. PLAYBACK CONTROL

Signature	Definition	Function
BBKSPQ	block backspace	initiates a block reverse
BFWSPQ	block forward space	initiates playback of 1 block
BREVQ1	block reverse state 1	signifies a block reverse is in progress
BUFFULQ	buffer full	a block has been read from tape but not yet fully transmitted
CLRCS–	clear chip select	reset chip select counter
CRDRCLK–	cassette reader clock	buffered RDRCLK
CRDRENA–	cassette reader enable	buffered RDRENA
CSCLK	cassette system serial clock	buffered SCLK
M2ADOO	memory 2 address 0	most significant playback buffer address bit
M2ADUP	memory 2 address up	increments playback buffer address by 1
M2ADUP1	memory 2 address up 1	increments playback buffer address to put data into buffer
M2ADUP2	memory 2 address up 2	increments playback buffer address to take data out of buffer
M2CS1–	memory 2 chip select 1	enable memory chip 1
M2WDAT	memory 2 write data	data from tape read circuit to playback buffer
M2W2–	memory 2 write 2	write enable for playback buffer
RBTCNQH	reader bit count	signifies 8 bits (1 character) have been read from tape
RBTCNCK	reader bit count clock	clock input to tape read bit counter
RCHCNLD–	reader character count load	clears tape read bit counter
RCHCN0–	reader character count $\neq 0$	signifies 90 characters read into playback buffer or 86 read out
RCHCNUP–	reader character count up	increments character count by 1
RDRER–	reader end-of-block	end-of-block bit detected
RDRENA–	reader enable	data on bus from playback
RDRENAQ	reader enable Q	reader enable has been detected
RDRERR	reader error	read error and no error inhibit
RDROF–	reader off	stop playback
RDRONQ	reader on Q	signals reader to read continuously
RDRQ0	reader state 0	wait state
RDRQ1	reader state 1	send request to terminal control
RDRQ2	reader state 2	wait for enable state
RDRRDY	reader ready	playback ready
RDRREQ	reader request	
RDRSTQ	reader start	start playback
READCK	reader clock	204.8 kHz
REBCL–	reader end-of-block clear	signifies an end-of-block has been detected from playback
RERROR	reader error	signal to front panel ERROR lamp
RERRORQ	reader error	playback read error detected
RFEED	reader feed	playback reading tape or transmitting buffer contents
RNBCL	reader end-of-block clear Q	clear buffer full and error statuses
RSBLQ	reader send 1 block	signals reader to send 1 block
RSCHQ	reader send 1 character	signals reader to send 1 character
RSCHCK–	reader send a character clock	clocks in send 1 character status
RSCHCLR–	reader send a character clear	clears 'send 1 character' status
SCLK–	serial clock	clocks data on bus
TPRDST–	tape read start	starts tape read controller
TPRQ0	tape reader state 0	wait state
TPRQ1	tape reader state 1	preamble state check

SLOT XA-4. PLAYBACK CONTROL (CONCLUDED)

TPRQ2	tape reader state 2	reading data from tape
TPRQ3	tape reader state 3	looking for gap
TREBLK	tape read block	signifies a block has been read (playback reaches interblock gap)
TRQ3	tape read state 3	signifies tape data bit transition
TRSY	tape read sync	resets read data latch to proper state after TRSYNCQ1 is removed
TRSYNCQ1–	tape read sync 1	syncs tape read circuit to seek first preamble bit
TRSYNCQ2–	tape read sync 2	enables setting read data latch to correct state after TRSYNCQ1 is removed
TR1/4T	tape read 1/4 T	signifies middle of a data bit time
TR5/4T	tape read 5/4 T	signifies missing phase change
TR21/4T	tape read 21/4 T	signifies tape data gap found
XRCHFW	reader character forward	initiates a character forward operation

SLOT XA-5. RECORD BUFFER

Signature	Definition	Function
BLCNUP–	block count up	store beginning address of new block
CBKSPQ–	character backspace	decrement record buffer address by 1 during edit
CNFMT–	continuous format	ignore carriage return decode
CSCLK	serial clock	clocks data on bus
DATA–		data on bus
DCHBIT1	display bit 1	bit 1 of character display
DCHCLR–	display character clear	clear character display register
FLXCLK	flux clock	12.8 kHz, tape write data clock
MPNSTQ–	manual point stop	causes writing of nulls in memory after a manual stop is detected
M1AD00	memory 1 address 0	most significant bit of record buffer address
M1CK–	memory 1 clock	204.8 kHz
M1CKENA	memory 1 clock enable	
M1CS1	memory 1 chip select 1	selects memory chip 1 of record buffer memory
M1CS2	memory 1 chip select 2	timing to increment block counter
M1RDAT	memory 1 read data	record buffer output for tape write
M1RDRQ1	memory 1 read request 1	request to read from memory record buffer for display
M1RDRQ2	memory 1 read request 2	request to record buffer memory during memory read-only cycle
M1RD1CK	memory 1 read 1 clock	clock data to record buffer memory and then out of memory to display register
M1RD2	memory 1 read 2	read-only part of memory cycle
M1RD2CK–	memory 1 read 2 clock	clocks data from record buffer memory during memory read-only cycle
M1WRENA	memory 1 write enable	write data clocks for record buffer memory
M1WRRD1	memory 1 write/read 1	write/read part of memory cycle
M1WRRQ1	memory 1 write request 1	request to write in record buffer memory
PADCNL–	punch address count load	transfer beginning address of block to record memory address registers
PNHCNUP	punch count up	increment record buffer address by 1 after punching character
PNHCRD	punch carriage return	carriage return decode
PNHENAR	punch enable to receive	data on bus to recorder

SLOT XA-5. RECORD BUFFER (CONCLUDED)

PNHENAW–	punch enable to write	data on bus
PNHONQ	punch on	record is on
PNHRDY	punch ready	record ready
PNHO2Q	punch state 2	increments record buffer address by 1 during print buffer
PWRRST–	power reset	
RCBFFL–	record buffer full	same as TPWBSY–
READCK	read clock	204.8 kHz master system clock
TPWBSY–	tape write busy	recorder has block, but is not yet writing on tape; or recorder is writing block on tape and has second block in buffer
TRFCLKA	transport reference clock A	6400 Hz
TRFCLKB	transport reference clock B	1066.7 Hz

SLOT XA-6. TAPE READ/WRITE

Signature	Definition	Function
BCHCNO–	block character count = 0	86 characters have been written on tape
BCSELQ	block check select	enables block check data to tape
BLCNDN–	block count down	decrement block counter by 1
BLCNEO	block count = 0	no block to write on tape
BLCNG12–	block count > 12	block counter about to overflow (record buffer is full)
BLCNUP–	block count up	increment block counter by 1
CNFFMT–	continuous format	ignore end-of-block flag bit
CNTQ–	count Q	signifies end of a gap on tape
CPNHCLK	cassette punch clock	6.4 kHz
C1RCD	cassette-1 record	cassette 1 in record mode
C2RCD	cassette-2 record	cassette 2 in record mode
DATENQ	data enable Q	enables write data to tape
FLXCLK	flux clock	12.8 kHz tape write data clock
MEMENQ–	memory enable Q	signifies data still in record memory to put on tape
M1CS2	memory 1 chip select 2	block counter is decremented by 1 during this time, if necessary
M1RDAT	memory 1 read data	data from record buffer memory
M1RD2	memory 1 read 2	enables write data register
M1RD2CK	memory 1 read 2 clock	clocks record buffer data to write data register
M1RDRQ2	memory 1 read request 2	request to read data from record buffer memory
M2WDAT	memory 2 write data	tape read binary data for playback buffer memory
PAMTQ	postamble data	data for both preamble and postamble characters
PEPHQ	phase-encoded phase bit	PE data phase bit
PNHRDY	punch ready	record ready
PSAMQ	postamble	enables postamble data to tape
RDRCLK	reader clock	204.8 kHz
RERRORQ–	reader error	causes entry of nulls into playback buffer memory
TPERSQ	tape erase	starts transport forward
TPWBSY–	tape write busy	signifies record buffer is full, stop sending data
TPWDATA	tape write data	PE data to tape
TPWFW	tape write forward	move tape forward
TPW01Q	tape write state 1	start tape forward to write
TPW02Q	tape write state 2	end of gap, start writing data

SLOT XA-6. TAPE READ/WRITE (CONCLUDED)

TRDATA	tape read data	PE data from tape
TRDTA	tape read data A	indicates ZERO to ONE flux transition on tape
TRDTB	tape read data B	indicates ONE to ZERO flux transition on tape
TRQ1	tape read state 1	signifies a tape data bit transition from a ONE to a ZERO
TRQ2	tape read state 2	signifies a tape data bit transition from a ZERO to a ONE
TRQ3	tape read state 3	signifies a tape data bit transition from a ZERO to a ONE
TRSY–	tape read sync	resets read data latch to correct state after TRSYNCQ1 is removed
TRSYNCQ1–	tape read sync 1	syncs tape read circuit to detect first preamble bit
TRSYNCQ2–	tape read sync 2	enables resetting read data latch to correct state after TRSYNCQ1 is removed
TR1/4T	tape read 1/4 T	signifies 1/4 of a tape read data bit time (center of data bit time)
TR3/4T	tape read 3/4 T	signifies 3/4 of a tape read data bit time (center of phase bit time)
TWCHCLK–	tape write character clock	800 Hz, issues requests to read from record buffer memory
T1RDTA–	tape 1 read data A	tape read data from transport 1
T1RDTB–	tape 1 read data B	tape read data from transport 1
T2RDTA–	tape 2 read data A	tape read data from transport 2
T2RDTB–	tape 2 read data B	tape read data from transport 2
WRTDTQ	write data	binary write data to tape
WRTEBD–	write end of block	signifies last character of a block (in line format)
WRTEBQ1–	write end of block 1	end-of-block flag bit detected
WRTEBQ2-	write end of block 2	disable input data

SLOT XA-7. RECORD CONTROL

Signature	Definition	Function
BLCNUP–	block count up	increment record block counter by 1
BUFRREQ–	buffer request	print buffer operation
CBKSCNE0–	character backspace ≠ 0	
CBKSPQ–	character backspace	decrement record buffer address by 1
CFWSPQ	character forward space	increment record buffer address by 1
COVPQ–	character overpunch	OR input character with record register and put result back into record register
CPNHCLK	cassette punch clock	6.4 kHz
CPNHQ	character punch	record a character
DATA–		serial data bus
DCHBIT1	display character bit 1	output of character display register
DCHCLR–	display character clear	
ERASEQ	erase	erase record buffer contents (reset address)
MPNSTQ–	manual stop	stop punch 'feed'
M1CS2	memory 1 chip select 2	block counter incremented during this time, if necessary
M1RDRQ1	memory 1 read request 1	request to read from record buffer memory
M1WRRQ1	memory 1 write request 1	request to write in record buffer memory
PADCNL–	punch address count load	load beginning address of present block
PNHCE0–	punch count = 0	
PNHCLR	punch clear	reset record controller
PNHCNE86	punch count = 86	

SLOT XA-7. RECORD CONTROL (CONCLUDED)

PNHCNUP	punch count up	increment punch character counter by 1
PNHCRD	punch carriage return decode	signifies a block ended by carriage return (line format)
PNHENAR–	punch enable to read	data on bus from record buffer
PNHENAW–	punch enable to write	data on bus to record buffer
PNHENARQ	punch enable to receive Q	signifies data sent to serial bus (end-of-record enable)
PNHLINE	punch on-line	record on line
PNHONQ	punch on	start punch 'feed'
PNH01Q	punch state 1	wait state
PNH02Q	punch state 2	update counters during print buffer
PNH03Q	punch state 3	send a print buffer request
PNH04Q	punch state 4	wait for a record enable
PNH05Q	punch state 5	terminate print buffer operation and reload record character counter
PNHRDY	punch ready	ready to record
PRNBUFQ–	print buffer Q	print out record buffer memory contents, if any
RCDSTP–	record stop	halts record operation
RECENA–	record enable	data on bus to/from recorder
TPBKSP–	tape backspace	backspace record buffer one character
TPFWSP–	tape forward space	forward space record buffer one character
XERASE–	erase	zero contents of record buffer, or erase tape
XPRNBUF–	print buffer	print the contents of the record buffer

SLOT XA-9. CASSETTE TRANSPORT

Signature	Definition	Function
BOT	beginning of tape	goes high when BOT sensor does not sense magnetic tape
CINPLACE	cassette in place	goes high when cassette in place and door closed
EOT	end of tape	goes high when EOT sensor does not sense magnetic tape
FAST	fast	places transport in fast mode
FWD	forward	command to move tape forward
RDTA	read data A	A component of PE read data (TTL)
RDTB	read data B	B component of PE read data (TTL)
REV	reverse	command to move tape backward
TACH	tach pulse	tach pulses from capstan motor tach generators
TRFCLKA	tape reference clock	reference clock for transports to control tape speed (6400 Hz)
WDATA	write data	TTL PE data to be written on tape
WRITE–	write	ZERO on this pin enables write circuits
WRTTAB	write tab	indicates when write enable tab is present

APPENDIX B

ASSEMBLY DRAWINGS AND PARTS LISTS

This Appendix contains assembly drawings and parts lists to aid in maintaining, troubleshooting, and repairing the 732/733 Data Terminals. The drawings and associated parts lists are divided into five groups, and drawings within each group are arranged in numerical order.

An index to the drawings and their associated parts lists is shown below.

	Title	TI Drawing Number	Page
MAJOR ASSEMBLIES			
	ASR Module (Upper Unit)	959389W	B-1
	Printer, Common	959404AI	B-4
	*732 ASR Terminal	960970D	B-9
	*732 KSR Terminal	960971D	B-13
	*733 ASR Terminal	960972F	B-16
	*733 KSR Terminal	960973E	B-20
	*732 R/O Terminal	971575A	B-23
	*733 R/O Terminal	971576A	B-26
	732 R/O Terminal	973946B	B-29
	732 KSR Terminal	973951R	B-34
	732 ASR Terminal	973952R	B-39
	733 KSR Terminal	973953T	B-44
	733 ASR Terminal	973954U	B-49
	733 R/O Terminal	973956M	B-54
MAJOR SUBASSEMBLIES			
	Power Module	959390AD	B-58
	Drive Mechanism	959391AF	B-60
	AC Power	959395T	B-63
	Head Stepping Motor	959399H	B-65
	Paper Stepping Motor	959400C	B-67
	Carriage	959413E	B-68
	Printhead	959422E	B-70
	Transport Assembly	960331V	B-71
	Auto Answer Display Panel	960983B	B-76
	Acoustic Coupler Panel	969620A	B-78
	Acoustic Coupler Panel	969644E	B-80
	Footpedal	973866A	B-82
	Transport Assembly	986353K	B-84
CABLE ASSEMBLIES			
	Power Switch	959246H	B-90
	Keyboard	959370L	B-92
	ASR Module Assembly	959371J	B-93
	EIA Interface	959372T	B-95
	Fan, Lower Unit	959379C	B-97
	AC Power Assembly	959381G	B-98
	Modem Interface	959383G	B-99
	TTY Interface	959384F	B-101
	Fan, Upper Unit	960071D	B-103
	Auto-Answer Control, EIA	971555D	B-105
	Option Display Panel	971556C	B-107
	Auto-Answer Control, Modem	971557E	B-109
	113A, EIA Cable	971558E	B-111
	Acoustic Coupler Y-Connector	973254C	B-113
	Acoustic Coupler Jumper	973258B	B-115

*Obsolete

PC CARD ASSEMBLY DRAWINGS

*Printer Control	959131W	B-117
Transmit/Receive, Baudot	959133N	B-122
Transmit/Receive, ASCII	959135N	B-125
Printer Code, ASCII	959137-0001W	B-128
Printer Code, Baudot, U.S.	959137-0002W	B-128
Printhead Interface	959141G	B-134
*Regulator/Amplifier (10A)	959143W	B-136
*Control Regulator (10A)	959145T	B-141
*Terminal Control, ASR	959147N	B-146
Display (dual cassette)	959155R	B-148
Power Module Motherboard	959157M	B-151
ASR Module Assembly Motherboard	959159D	B-153
TTY Interface, Polar	959171-0001J	B-155
TTY Interface, Neutral	959171-0002J	B-156
TTY Interface, Computer	959171-0003J	B-157
Terminal Control, KSR	959173H	B-161
*Cassette Transport	960080Y	B-163
*Remote Device Control	960169A	B-168
Answer-Back Memory	960881L	B-171
Auto-Answer Control	960885F	B-174
Modem, ATL	960887-0001H	B-176
Modem, ATL-2	960887-0002H	B-177
Modem, ATH	960887-0003H	B-178
Rectifier (AC Power Assembly)	960889N	B-185
*Auto Device Control (2 cards)	960891A	B-187
Remote Cassette Control	960901G	B-189
*Record Buffer Control, 300 Baud	960903-0001G	B-191
*Record Buffer Control, Baudot	960903-0002G	B-191
*Playback Control	960905G	B-193
*Motion Control	960907K	B-195
Record Control	960909G	B-197
Tape Read/Write Control	962281E	B-199
Dual Format Record Buffer	962285J	B-201
*Receiver, 1200 Baud	962291A	B-204
Transmitter, 1200 Baud	962293D	B-207
Dual Format Tape Read/Write Control	969451F	B-209
*Dual Format Playback Control	969453E	B-211
*Dual Format ASCII Transmit/Receive	969455B	B-213
Regulator/Amplifier (14A)	971443R	B-216
Control Regulator (14A)	971450L	B-221
Auto Device Control (2 cards)	971481K	B-226
Remote Device Control (Multilayer)	971483L	B-228
Auto Search Control (2 cards)	971485D	B-231
Auto Search Control (2 cards)	971493E	B-234
Remote Device Control (Multiwire)	973901J	B-237
1200 Dual Format Transmit/Receive	973905L	B-240
Receiver, 1200 Baud	973907C	B-243
Acoustic Coupler	974054F	B-246
Terminal Control	981310B	B-251
Printer Control	981313E	B-254
Motion Control	981315E	B-259
Dual Format Playback Control	981319C	B-262
Cassette Transport	981339K	B-265

MISCELLANEOUS DRAWINGS

ASR Outline Dimensions	960131	B-270
KSR Outline Dimensions	960132	B-271

*Obsolete

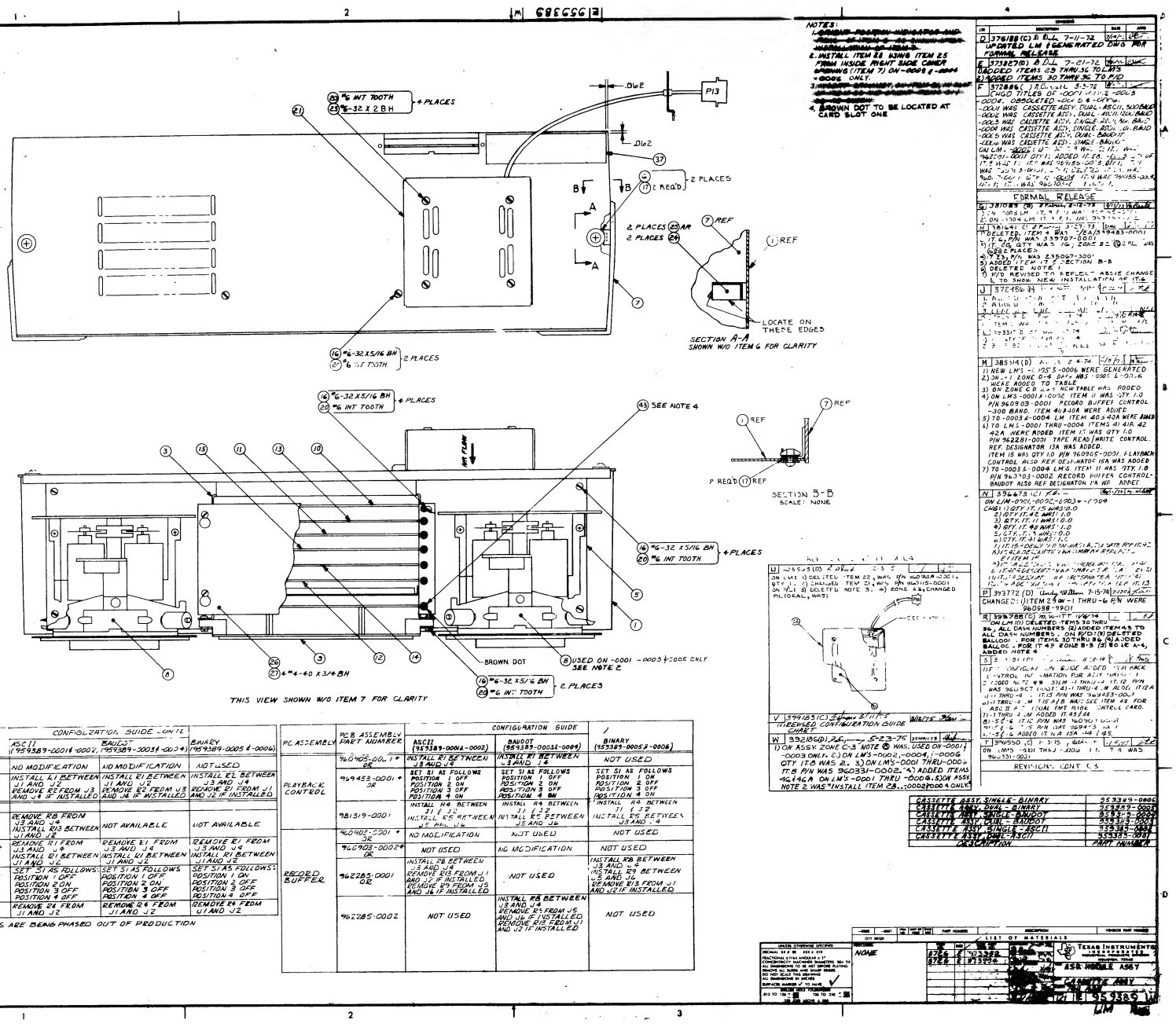

PC ASSEMBLY	PCB ASSEMBLY PART NUMBER	CONFIGURATION GUIDE (CONT'D) ASCII (959389-0001 & -0002, 959389-0003 & -0004)	BAUDOT (959389-0003 & -0004)	BINARY (959389-0005 & -0006)
TAPE READ/WRITE	962281-0001 * OR	NO MODIFICATION	NO MODIFICATION	NOT USED
	969451-0001	INSTALL J1 BETWEEN J1 AND J2 REMOVE R6 FROM J3 AND J4 IF INSTALLED	INSTALL R1 BETWEEN J1 AND J2 (REMOVE R2 FROM J3 AND J4 IF INSTALLED	INSTALL R2 BETWEEN J3 AND J4 REMOVE R1 FROM J1 AND J2 IF INSTALLED
OPTIONS				
ETI DECODE OPTION	962285-0001 MUST BE INSTALLED	REMOVE R6 FROM J3 AND J4 INSTALL R13 BETWEEN J1 AND J2	NOT AVAILABLE	NOT AVAILABLE
PROCESSOR CLOCK OPTION (STOP ON ERROR IS STANDARD)	960605-0001 * OR	REMOVE R1 FROM J3 AND J4 INSTALL R1 BETWEEN J1 AND J2	REMOVE R1 FROM J3 AND J4 INSTALL R1 BETWEEN J1 AND J2	REMOVE R1 FROM J3 AND J4 INSTALL R1 BETWEEN J1 AND J2
	969453-0001 * OR	SET S1 AS FOLLOWS: POSITION 1 OFF POSITION 2 ON POSITION 3 OFF POSITION 4 OFF	SET S1 AS FOLLOWS POSITION 1 OFF POSITION 2 ON POSITION 3 OFF POSITION 4 OFF	SET S1 AS FOLLOWS: POSITION 1 ON POSITION 2 OFF POSITION 3 OFF POSITION 4 OFF
	981319-0001	REMOVE R4 FROM J1 AND J2	REMOVE R4 FROM J1 AND J2	REMOVE R4 FROM J1 AND J2

* THESE CARD ASSEMBLIES ARE BEING PHASED OUT OF PRODUCTION

PC ASSEMBLY	PCB ASSEMBLY PART NUMBER	CONFIGURATION GUIDE ASCII (959389-0001 & -0002)	BAUDOT (959389-0003 & -0004)	BINARY (959389-0005 & -0006)
	960905-0001 * OR	INSTALL R1 BETWEEN J3 AND J4	INSTALL R1 BETWEEN J3 AND J4	NOT USED
PLAYBACK CONTROL	969453-0001 * OR	SET S1 AS FOLLOWS POSITION 1 OFF POSITION 2 ON POSITION 3 OFF POSITION 4 ON	SET S1 AS FOLLOWS POSITION 1 OFF POSITION 2 ON POSITION 3 OFF POSITION 4 ON	SET S1 AS FOLLOWS POSITION 1 ON POSITION 2 OFF POSITION 3 OFF POSITION 4 ON
	981319-0001	INSTALL R4 BETWEEN J1 & J2 INSTALL R5 BETWEEN J3 AND J4	INSTALL R4 BETWEEN J1 & J2 INSTALL R5 BETWEEN J3 AND J4	INSTALL R4 BETWEEN J1 & J2 INSTALL R5 BETWEEN J3 AND J4
RECORD BUFFER	960902-5001 * OR	NO MODIFICATION	NO MODIFICATION	NOT USED
	962908-0002 * OR	NOT USED	NO MODIFICATION	NOT USED
	962285-0001 OR	INSTALL R8 BETWEEN J3 AND J4 REMOVE R13 FROM J1 AND J2 IF INSTALLED REMOVE R9 FROM J5 AND J6 IF INSTALLED	NOT USED	INSTALL R8 BETWEEN J3 AND J4 INSTALL R9 BETWEEN J5 AND J6 REMOVE R13 FROM J1 AND J2 IF INSTALLED
	962285-0002	NOT USED	INSTALL R8 BETWEEN J3 AND J4 REMOVE R9 FROM J5 AND J6 IF INSTALLED REMOVE R13 FROM J1 AND J2 IF INSTALLED	NOT USED

DESCRIPTION	PART NUMBER
CASSETTE ASSY, SINGLE - BINARY	959389-0006
CASSETTE ASSY, DUAL - BAUDOT	959389-0003
CASSETTE ASSY, SINGLE - BAUDOT	959389-0004
CASSETTE ASSY, DUAL - ASCII	959389-0001
CASSETTE ASSY, SINGLE - ASCII	959389-0002
CASSETTE ASSY, DUAL - ASCII	959389-0001

OCTOBER 31, 1975

L I S T O F M A T E R I A L

PART NUMBER	REV	DESCRIPTION.....
959389-0001	W	CASSETTE ASSY
959389-0002		
959389-0003		

ITEM.	QUANTITY.	COMPONENT..	DESCRIPTION.....	UM	I
0001	00001.000	960102-0001	BASE ASSY,CASSETTE 1209-0102-014	EA	
0003	00001.000	959406-0001	RACK ASSY,CARD-CASSETTE 1209-9406-023	EA	
0005	00001.000	959159-0001	CASSETTE MOTHER 1210-9159-077	EA	
0006	00002.000	972765-0004	LATCH PANEL-ROUND SOU--45-20-101-10	EA	
0007	00001.000	960100-0001	COVER,CASSETTE (INJECTION MOLDING	EA	
0008	00002.000	986353-0001	MAGNETIC TAPE TRANSPORT ASSY 1209-6363-512	EA	
0009	00001.000	959155-0001	DISPLAY,DUAL CASSETTE ASC II 1210-9155-080	EA	
0009	00001.000	959155-0002	DISPLAY,SINGLE CASSETTE ASC II 1209-1528-003	EA	
0009	00001.000	959155-0003	DISPLAY,DUAL CASSETTE BAUDOT 1210-1529-003	EA	
0010	00001.000	960909-0001	RECORD CONTROL 1210-0909-070	EA	
0011	00001.000	962285-0001	DUAL FORMAT RECORD BUFFER-US ASCII DCD 1210-2285-039	EA	
0011A			SEE ITEM 40 FOR ALTERNATE 1210-2285-039		
0011B			(DUAL FORMAT RECORD BUFFER) 1210-2285-039		
0012	00001.000	981315-0001	MOTION CONTROL 1210-1315-016	EA	
0012A			SEE ITEM 45 FOR ALTERNATE 1210-1315-016		
0013	00001.000	969451-0001	DUAL FORMAT TAPE READ/WRITE CONTROL 1210-9451-039	EA	
0013A			SEE ITEM 41 FOR ALTERNATE 1210-9451-039		
0013B			(D/FRMT TAPE R/W CONTROL) 1210-9451-039		
0014	00001.000	960901-0001	REMOTE CASSETTE CONTROL 1210-0901-071	EA	
0015	00001.000	981319-0001	DUAL FORMAT PLAYBACK CONTROL 1210-1319-020	EA	
0015A			SEE ITEM 42&44 FOR ALTERNATE 1210-1319-020		
0016	00012.000	418293-0027	SCREW 6-32 UNC-2A X .312 PAN HEAD CRES QPL- MS1957-27	EA	
0017	00004.000	972765-0007	LATCH,PANEL-SPACER WASHER SOU-45-24-101-15	EA	
0020	00016.000	411100-0071	LOCKWASHER #6 INTERNAL TOOTH CRES QPL- MS35333-71	EA	
0021	00001.000	981323-0001	CASSETTE FAN ASSY 1209-1323-000	EA	
0023	00004.000	418293-0038	SCREW 6-32 UNC-2A X 2.00 PAN HEAD CRES QPL- MS1957-38	EA	
0024	00002.000	960912-0001	BRACKET,SWITCH 1209-0912-009	EA	
0025	AR	410423-0003	ADHESIVE GEN PURP CYANOACRYLATE TYPE 1 SEE- TI DRAWING	EA	
0026	00001.000	960961-0001	RETAINER,BD. 1209-0961-012	EA	
0027	00004.000	418293-0019	SCREW 4-40 UNC-2A X .750 PAN HEAD CRES QPL- MS1957-19	EA	
0028	00001.000	960117-0001	PLUG,TRANSPORT DOOR HOLE	EA	
0037	00001.000	962571-0001	PLATE,IDENTIFICATION	EA	
0040	00000.000	960903-0001	REPLACED BY 962285-1 1210-0903-032	EA	
0040A			ALTERNATE FOR ITEM 11 1210-0903-032		
0040B			(RECORD BUFFER CONTROL) 1210-0903-032		
0040	00000.000	960903-0002	REPLACED BY 962285-2 1209-1515-011	EA	
0041	00000.000	962281-0001	REPLACED BY 969451-1 1210-2281-001	EA	
0041A			ALTERNATE FOR ITEM 13 1210-2281-001		
0041B			(TAPE READ/WRITE CONTROL 1210-2281-001		

OCTOBER 31, 1975 LIST OF MATERIAL

PART NUMBER	REV	DESCRIPTION
959389	W	CASSETTE ASSY

ITEM.	QUANTITY.	COMPONENT..	DESCRIPTION	UM	I
0042	00000.000	960905-0001	REPLACED BY 981319-1 1210-0905-034	EA	
0042A			MAY BE USED AS AN ALT FOR 1210-0905-034		
0042B			ITEM 15 IN ASCII CONFIG. 1210-0905-034		
0042C			(PLAYBACK CONTROL) 1210-0905-034		
0043	AR	972358-0003	COLOR CODING KIT,PRES SENSITIVE ADHESIVE SEE- TI DRAWING	EA	
0044	00000.000	969453-0001	REPLACED BY 981319-1 1210-9453-006	EA	
0044A			MAY BE USED AS AN ALTERNATE 1210-9453-006		
0044B			FOR ITEM 15 1210-9453-006		
0045	00000.000	960907-0001	REPLACED BY 981315-1 1210-0907-087	EA	
0045A			MAY BE USED AS AN ALTERNATE 1210-0907-087		
0045B			FOR ITEM 12 1210-0907-087		
0046	00000.000	960331-0002	MAGNETIC TAPE TRANSPORT ASSY (LED) 1209-3229-506	EA	
0046A			MAY BE USED AS ALTERNATE FOR 1209-3229-506		
0046B			ITEM 8 1209-3229-506		
9999	00005.000	239999-9999	COST, SHRINKAGE	EA	

WIRE NO	DESCRIPTION	START STATION	FINISH STATION	REMARKS	ITEM NO
1	CABLE ASSY	FB1-1	S1-1	WHT/BLK	25
2	CABLE ASSY	TB1-4	DS1-1	WHT	25
3	CABLE ASSY	TB1-7	S1-2	WHT/RED	20
4	CABLE ASSY	TB1-7	DS1-2	WHT/RED	25
5	CABLE ASSY	E-1	E2	WHT/GRN	20

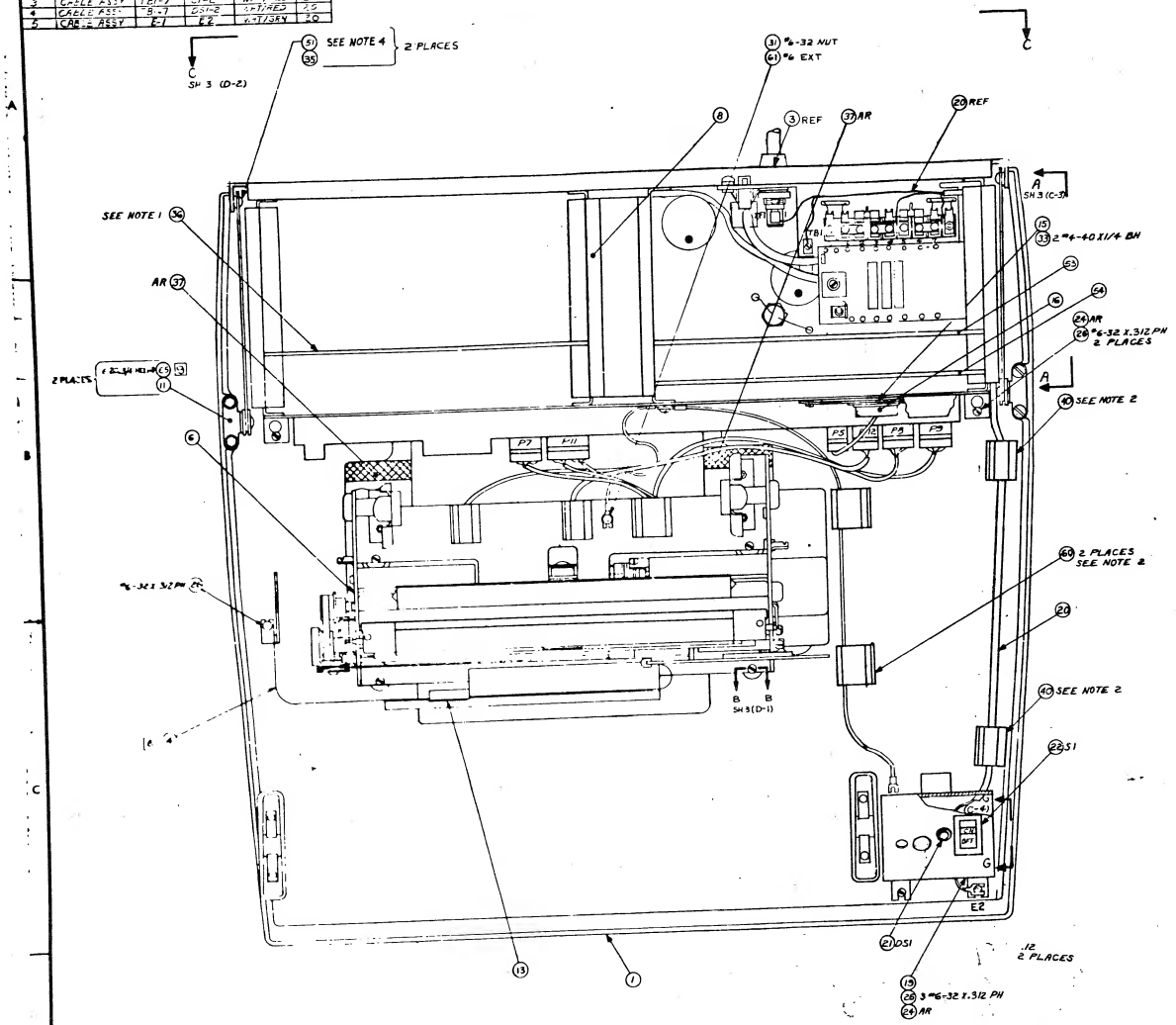

THIS VIEW SHOWN WITH ITEM 3 IN OPEN POSITION

-0001 & -0002 ASSY

NOTES:
1. ITEM 36 TO BE INSTALLED IN THE SECOND SLOT FROM THE FRONT OF THE POWER MODULE (ITEM 8)
2. CLEAN AREAS WHERE ITEMS 39 & 40 ATTACH TO BASE, ITEM 1, BEFORE BONDING
3. ~~SECURE SHOP LOG OF DUNKIRK, ITEM 17, UNDER HEAD OF EXISTING SCREW ON POWER MODULE, ITEM 8~~
4. TIGHTEN UNTIL SNUG THEN BACK OFF $\frac{1}{8}$ TO $\frac{1}{4}$ TURN
5. ~~TIGHTEN MOUNTING SCREWS FOR ELEC. UNIT SNUG (3-4 TURNS) TO NOT EXCEED~~
6. LUBRICATE HINGE LIGHTLY WITH ITEM 63 AND WIPE OFF EXCESS LUBRICANT.
7. SHORTING STRAP (ITEM 64 SHOULD BE CONNECTED WITH SLOTTED END TOWARDS HINGE
8. THE PRINTHEAD SHOULD BE EXTENDED TO THE RIGHT LIMIT OF THE CARRIAGE ASSEMBLY. THERE SHOULD BE APPROX. .75 SERVICE LOOP BETWEEN THE GUIDE AND THE HEAD ASSY.
9. ITEM 66 MAY BE USED WHEN ITEM 65 STRIPS OUT

LTR	DESCRIPTION	DATE	APP
C	376186 (C) 3 JUL 7-1-72 UPDATED LM & GENERATED CHG FOR FORMAL RELEASE		

FORMAL RELEASE

D 374047 (C) [illegible] 8-23-[illegible]
1. ZONE B2 ON F/D ADDED ITS 17, 18, 134
2. ZONE A3 ADDED NOTE 3
3. ON LM ADDED IT. 17; QTY OF IT. 3 & 34 WAS 2
4. TITLE WAS: COMMON ASSY, PRINTER

[illegible]

F [illegible]
DELETE: 1) ITEM 39 [illegible] VIEW A-A
CHG 1) ITEM 26 QTY WAS 6
2) ITEM 39 QTY WAS 3
3) WIRE LIST WIRE 34 START STA WAS SH-2
4) SH 1 ZONE A1 ITEM 51 WAS ITEM 26
ADDED 1) ITEMS 50 & 51
2) NOTE 4

G 378945 (D) [illegible] 7-16-73
1) ON LM, ADDED ITEM 52
2) ON SH 2, ZONE 2A, ADDED ITEM 52

H 375815 (D) [illegible]
1) SH 3 WAS SH 2, ADDED NEW SH 2
2) ADDED -0002 & -0003 AND P/N SCHEDULE
3) LM -0001 TITLE WAS "PRINTER ASSY COMMON"

J [illegible]
DELETED: 1) IT 45 DASH NO. 1 & 3 P/N WAS [illegible]
TEST PROC. PRINTER [illegible]
ADDED: 1) ON LM DASH NO. 1 & 3 [illegible]
2) F/D ZONE D-2 [illegible]

K 386353 (C) 12-11-73
CHG: -0002 LM IT. 8 P/N WAS 959390-0002, AND DESCRIPTION WAS: POWER MODULE ASSY (14A).
ADDED IT. 53 & 54 TO -0001, -0002 & -0003 LM.
ADDED BALOON ITEMS 53 & 54 ON SH. 1 & 2 ZONE B 3.
CHG: SH. 1 ZONE D 2 CALLOUT WAS: -0001 ASSY

L 388721 (B) 1-4-74
DELETED: IT. 17 ON -0001, -0002 & -0003 P/N WAS 960967-0001, LEAD, ELECTRICAL GND.
DELETED BALOON "17" SEE NOTE 3 ZONE A-2.
DELETED NOTE 3 ZONE A-3.
DELETED BALOON "17" SEE NOTE 3, SH. 2, ZONE A-2.

M 385391 (B) 1-28-74
1) SH 3 F/D ZONE A1 & A2 CHG CALLOUT TO 7 & 48 FROM 2 TO 5, DELETED CALLOUT IT. 25
2) SH 3 ZONE B1 ADDED CALLOUT IT. 32
3) SH 3 & 2 ZONE B1 RELOCATED PICTORIAL IT. 25
4) SH 3 ZONE D1 SEC. B2 ADDED CALLOUT IT. 24
5) ADDED NOTE 5 & NOTE 5 CALLOUT SH 1 & 2 ZONE D1
LM CHG: QTY IT. 47 & 48 WAS 2, QTY IT. 25 WAS 13, QTY IT. 32 WAS 2
LM CHG AFFECTS -0001, -0002 & -0003

N 386845 (C) [illegible]
1) ON LM'S FOR ALL DASH NUMBERS ITEM 15 WAS 960915 CLAMP ASSY, SPEAKER

P 389260 (C) 4-26-74
1) ON -0003 LM ADDED ITS 55 THRU 59.
2) ON -0001 LM ADDED ITS 56 THRU 59.
3) ON -0002 LM ADDED ITS 56 AND 57.
4) ON -0001 AND -0003 LM IT. 53 P/N WAS 959143-0001 IT. 54 P/N WAS 959145-0001

R 396678 (C) 6-27-74
DELETED: (1) IT 38 P/N WAS 960119-0001 QTY WAS 1, ON -0001 & -0002 ONLY, ON -0003 IT. 38 WAS 973231-0001 QTY WAS 1. (2) ON -0001 -0002 & -0003 IT. 41 P/N WAS 232478-2001 QTY WAS 1, IT. 42 P/N WAS 772828-0001 QTY WAS 1, IT. 43 P/N WAS 236406-0600 QTY WAS 1, IT. 44 P/N WAS 772827-0001 QTY WAS 1. (3) SECTION EE FROM SH 1 & 2.

S 396687 (C) Andy Wilson 7-10-74
DELETED: 1) ITEM 39, P/N 231123-0500, QTY OF 2 FROM -0001, -0002 & -0003
CHANGED: 1) ITEM 40 QTY WAS 2

T 398813 (D) 10-17-74
ON LM: CHG QTY -0001 & -0002 IT. 40 WAS 4, CHG QTY -0001 -0002 & -0003 IT. 25 WAS 10, IT. 26 WAS 4. ADDED IT. 60 TO -0001 & -0002. ADDED IT. 61 TO ALL DASH NO. CHG P/N IT. 21 WAS 772811-0001
ON F/D ZONE B-3 (60) WAS (40) ON SH 1. ON SH 5 SECTION B-8 DELETE (3) FROM (26) ALSO ADDED (61) BETWEEN (6) AND (40) ALSO (26) WAS (23) SH 1 DELETE CABLE CONNECTOR FROM SWITCH ASSY WHICH SHOULD HAVE BEEN DONE AT R REVISION.

REVISIONS CONT ON SH. 2

DESCRIPTION	PART NUMBER
PRN ASSY, COMMON 2D.	959404-0003
PRN ASSY COMMON 14A	959404-0002
PRN ASSY COMMON 2A.	959404-0001

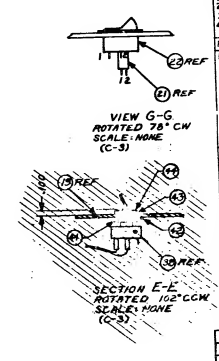

REV STATUS OF SHEETS	REV	AE	AD	AC
	SH	1	2	3

PROJ	TITLE	REV
8726	A	[illegible]
8726	A	[illegible]
8734	E	[illegible]
8734	E	[illegible]
8726	A	[illegible]
8726	A	[illegible]

PROCESSES: NONE

PART NUMBER	DESCRIPTION	PART NUMBER
8726	E 9739[illegible]	
8726	E 9739 52	
8726	E 9739 53	
8726	E 9739[illegible]	
8726	E 9739[illegible]	
8726	A 971[illegible]	
8726	A [illegible]	

LIST OF MATERIALS

TEXAS INSTRUMENTS INCORPORATED
SEMICONDUCTOR-COMPONENTS DIVISION
DALLAS, TEXAS

PRINTER ASSY, COMMON
[illegible] ASSY

(CONT IN ZONE D-3 SH 1)

SHEET 1 OF 3

WIRE NO	DESCRIPTION	FROM STATION	TO STATION	REMARKS	ITEM NO
1	CABLE ASSY	XFI-1	SM		3
2	CABLE ASSY	TBI-8	SM		3
3	CABLE ASSY	TBI-7	SI-5		20
4	CABLE ASSY	TBI-7	DSI-2		20
5	CABLE ASSY	E1	E2	WAITSAW	20

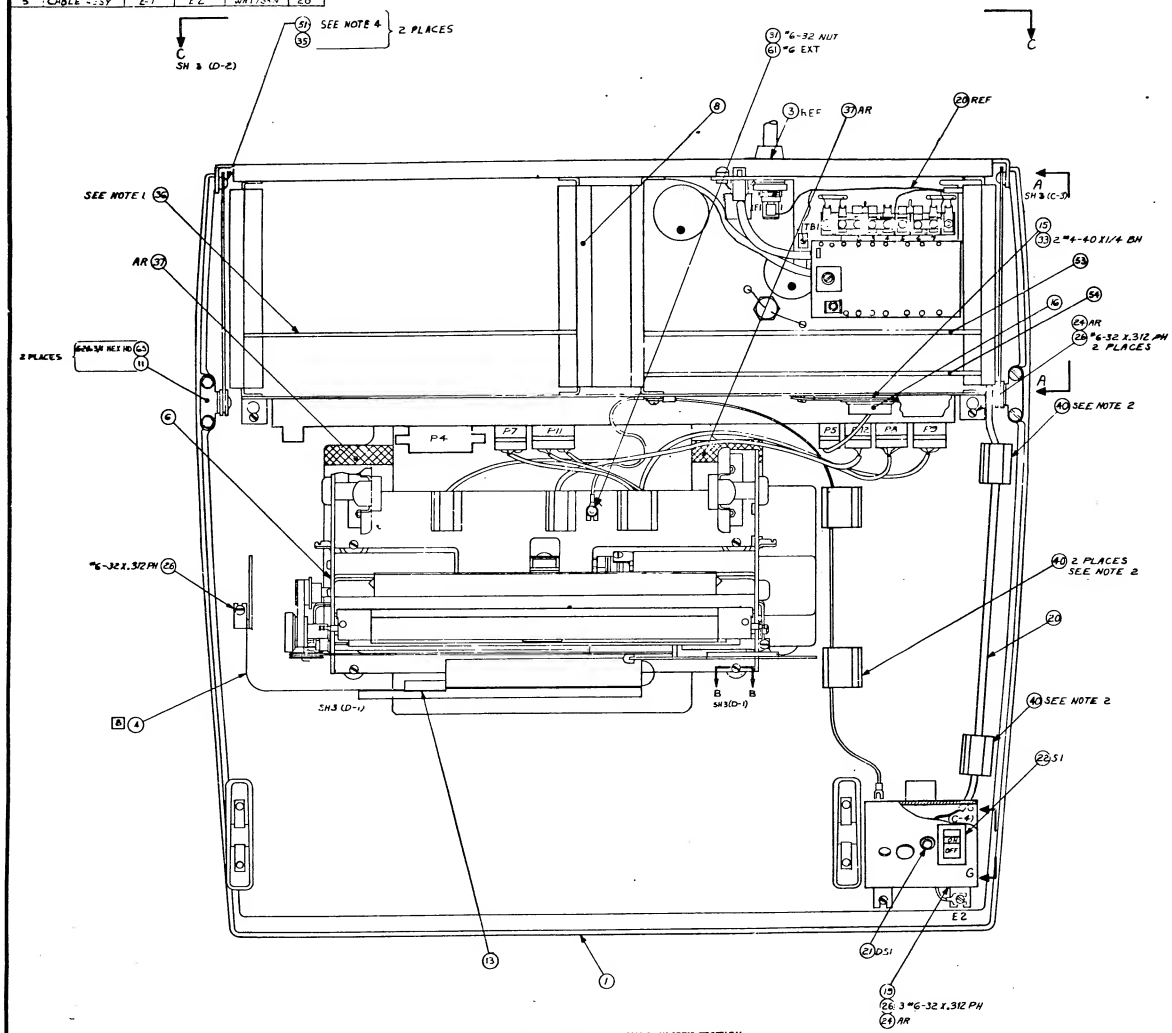

THIS VIEW SHOWN WITH ITEM 3 IN OPEN POSITION

-0003 ASSY

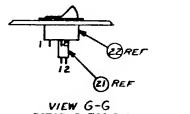

VIEW G-G
ROTATED 78° CW
SCALE: NONE
(C-3)

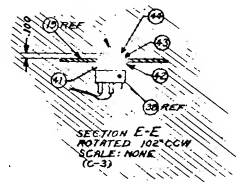

SECTION E-E
ROTATED 102° CCW
SCALE: NONE
(C-3)

U 3-93 ... ITEM 6 ... ITEM 26 ... ITEM 6, 2, 6

6 2 A

V 403462 (D) ... ITEM 5 P/N ...

W 3917041(D) 7 ... 5-23-75 ...
REVISED SHEETS 1, 2, 3 TO 4 INCORPORATE NEW PRINTER BASE (1711) WITH FOLLOWING LM CHANGES: 1) CHG 0001, 0002, 0003 LM 1711 P/N WAS 960107, IT 25 QTY WAS 6, IT 26 QTY WAS 8, IT 31 QTY WAS 3.
2) DELETED ITEMS: IT 7 P/N 222366 QTY 2, IT 13 P/N 253338 QTY 1, IT 18 P/N 772813 QTY 1, IT 23 P/N 232658 QTY 4, IT 29 P/N 533483 QTY 1, IT 46 P/N 371410 QTY 1, IT 47 P/N 232456 QTY 5, IT 48 P/N 235054 QTY 5, IT 50 P/N 235058 QTY 1.

Y 406570(C) 7 ... 7-16-75 ...
ON LM: 1) ADDED ITEM 44 TO -0001, -0002, -0003 ON F/D 2) SH1 ADDED NOTE 6
3) ZONE B-1 ... ADDED FLAG NOTE 6.

Z 3917731(D) 8/8/75 ...
DELETED 1) SH 3, ZONE B-3, PRINTER COVER AND BALLOON ITEMS 30, 31, 34.
2) SH 3, ZONE B-3, FUSE RATING LABEL, CALLOUT & LOCATING DIM.
3) ITEM 2 WAS P/N 960105-0001 QTY 1. 4) ITEM 30 WAS P/N 418198-0028 QTY 2. 5) ITEM 52 WAS P/N 971434-0... QTY 1. 6) SH 1 #2, ZONE D-3, WIRE AND LUGS FROM DS1 RELOCATED
CHG 1) SH 3, ZONE C-2, VIEW C-C WAS "ITEM 2 SHOWN..."
2) SH 1#2, ZONE 1#2 WAS "1=1% VIEW SHOWN WITHOUT COVER, ITEM 2 FOR CLARITY. ITEM 3 SHOWN IN OPEN POSITION"
3) ITEM 8 WAS "POWER MODULE ASSY-10 AMP."
4) ITEM 51 WAS QTY 2. 5) ITEM 34 WAS QTY 3.
6) ITEM 49 WAS QTY 2. 7) ITEM 61 WAS QTY 4.
8) ITEM 24 W1 WAS EA, P/N 235282-0002.
ADDED 1) SH 3, ZONE D-2, VIEW D-D.
2) SH 1, NOTE 7. 3) ITEMS 30 & 64. 4) W/A BLOCK 971570, 973945, 973955, 986390, 974082/974019

AA 3969(D) 11/10/75 ...
DELETED 1) -0001, -0002 & -0003 LM, IT 34 WAS P/N 418431-0025, QTY 1
CHG 1) PICTORIAL OF SH #2 TO SHOW ITEM #13.
2) QTY IT 61 WAS 6
3) PICTORIAL OF SH #2, BALLOON IT 61 WAS BALLOON IT 34.
4) IT 25 WAS QTY 10
5) ZONE B1 SH #2, BALLOON IT #'S 2 PLACES WAS IT 25 #4, 2 PLACES.
ADDED 1) IT 4, 13 & 66
2) NOTE 8 TO SH 1
3) PROJ NO. 8726 & W/A NO. 971571/971572 TO SH 1

AB 410584(C) ... 2-11-76 ...
LM: ITEM 65 DASH 1 #3 PART NO WAS 972989-0008 SCREW, MACHINE, PAN HEAD 3/4 x 20.

AC 4166462(C) FW PICARD 10-1-76 ...
DELETED NOTES 4, 5. DELETED ITEM 25 WAS P/N 972988-0027, QTY 4. CHANGED QTY ITEM 26 TO 10. CHANGED ITEM 25 CALLOUT TO 26 SHEET 1 & 2.

AD CN426530 1-6-77 ...
1) ADD NOTE 8 (2) ADD ITEM 66 ON ALL DASH NO

QTY REQD	ITEM	PART NUMBER	DESCRIPTION	VENDOR PART NUM
			LIST OF MATERIALS	

PROCESSES: NONE

TEXAS INSTRUMENTS
PRINTER ASSY, COMMON
E 959404
SHEET 2

VIEW A-A
SCALE: NONE
VIEW D-D
SCALE: 2/1
VIEW C-C
OPEN POSITION
SECTION B-B
SCALE: 2/1
ROTATED 180°
4 PLACES
TEXAS INSTRUMENTS
PRINTER ASSY
SHEET 3

OCTOBER 14, 1977 LIST OF MATERIAL

PART NUMBER	REV	DESCRIPTION
0959404-0001	AC	PRINTER ASSY,COMMON (10A)
0959404-0002	AC	PRINTER ASSY,COMMON (14A)
0959404-0003	AD	PRINTER ASSY,COMMON (RO)

ITEM.	QUANTITY.	COMPONENT..	DESCRIPTION		UM
0001	00001.000	0981320-0001	BASE PRINTER		EA
0003	00001.000	0959303-0001	PLATE HINGE ASSY 1209-9303-C53	01+04+06	EA
0004	00001.000	0959422-0001	PRINT HEAD ASSY,EPN 1-4 1209-9422-611		EA
0006	00001.000	0959391-0001	DRIVE MECHANISM ASSY 1209-9391-711		EA
0008	00001.000	0959390-0001	POWER MODULE ASSY 1209-9390-711		EA
0009	00004.000	0539805-0004	GROMMET,PLATE MTG LOD -J-3112-1-6		EA
0010	00004.000	0960941-0001	BUSHING,MOUNTING 1209-0941-C40		EA
0011	00002.000	0959340-0001	SUPPORT,FRICTION SLIDE		EA
0013	00001.000	0959418-0001	CLIP SUBASSY,FLEX CABLE 1209-9418-028		EA
0015	00001.000	0960965-0001	CLAMP,SPEAKER 1209-0965-022		EA
0016	00001.000	0959378-0001	SPEAKER ASSY 1209-9378-073		EA
0019	00001.000	0960112-0001	BRACKET,SWITCH 1209-0112-028		EA
0020	00001.000	0959246-0001	CABLE ASSY,POWER SWITCH 1209-9246-C59		EA
0021	00001.000	0772811-0005	LAMP 45XP15 RED LEE --45XP15		EA
0021A			DS1 LEE --45XP15		
0022	00001.000	0772812-0001	SWITCH SPST BLACK CEI -TA201-TBB		EA
0022A			S1 CEI -TA201-TBB		
0024	AR	0235182-0003	SEALANT LOCTITE GRADE E PURPLE LOC -80		TU
0026	00010.000	0972988-0027	SCREW 6-32 X .312 PAN HEAD CRES		EA
0027	00001.000	0418212-0010	STRAP,TIEDOWN,ADJUSTABLE,PLASTIC QPL - MS3367-1-9		EA
0028	00006.000	0972988-0029	SCREW 6-32 X .438 PAN HEAD CRES		EA
0031	00001.000	0411115-0064	NUT,PLAIN 6-32 UNC-2B HEX CRES QPL - MS35649-264		EA
0032	00008.000	0416622-0013	WASHER #6 FLAT QPL - AN960C6L		EA
0033	00002.000	0972988-0013	SCREW 4-40 X .250 PAN HEAD CRES		EA
0035	00002.000	0236474-0000	WASHER #-9 NTN -W-9		EA
0036	00001.000	0981313-0001	PRINTER CONTROL,PWB ASSEMBLY 1210-1313-128		EA
0036A			SEE ITEM 62 FOR ALTERNATE 1210-1313-128		
0036B			(PRINTER CONTROL) 1210-1313-128		
0037	AR	0235744-0105	TAPE 1/16X1/2 VINYL FOAM MMM -4516 36 YD/ROL		RL
0040	00002.000	0231123-0510	CLIP ADHESIVE BACK PLASTIC 1/4 ID DEK -DK-250		EA
0049	00001.000	0972988-0030	SCREW 6-32 X .500 PAN HEAD CRES		EA
0050	00001.000	0972988-0031	SCREW 6-32 X .625 PAN HEAD CRES		EA
0051	00002.000	0981326-0007	CAPSCREW,312LG #6 SPL SOC BUTTON HD STL SEE - THIS DRAWING		EA
0053	00001.000	0971443-0001	REGULATOR/AMPLIFIER-14AMP 1210-1443-180		EA
0054	00001.000	0971450-0001	CONTROL/REGULATOR-14AMP 1210-1450-181		EA
0055	REF	0962319-9901	TEST PROC,PRINTER COMMON,POST RUN-IN		EA
0056	REF	0962318-9901	TEST PROC,PRINTER COMMON,RUN-IN		EA
0057	REF	0962317-9901	TEST PROC,PRINTER COMMON,PRE-RUN-IN		EA
0058	00000.000	0959143-0001	REGULATOR/AMPLIFIER 1210-9143-001		EA
0058A			ITEM 58 MAY BE USED AS AN 1210-9143-001		

PART NUMBER	REV	DESCRIPTION
0959404-0001	AD	PRINTER ASSY,COMMCN (10A)

ITEM.	QUANTITY.	COMPONENT..	DESCRIPTION	UM
0058B			ALTERNATE FOR ITEM 53 IF 1210-9143-001	
0058C			AND CNLY IF ITEM 59 IS 1210-9143-001	
0058D			USED AS AN ALTERNATE FOR 1210-9143-001	
0058E			ITEM 54 1210-9143-001	
0059	00000.000	0959145-0001	CONTRCL/REGULATOR 1210-9145-001	EA
0059A			ITEM 59 MAY BE USED AS AN 1210-9145-001	
0059B			ALTERNATE FOR ITEM 54 IF 1210-9145-001	
0059C			AND CNLY IF ITEM 58 IS 1210-9145-001	
0059D			USED AS AN ALTERNATE FOR 1210-9145-001	
0059E			ITEM 53 1210-9145-001	
0060	00002.000	0231123-0520	CLIP ADHESIVE BACK PLASTIC 3/8 ID DEK -DK-375	EA
0061	00007.000	0411101-0058	LOCKWASHER #6 EXTERNAL TOOTH CRES QPL - MS35335-58	EA
0062	00000.000	0959131-0001	BOARD ASSY,PRINTER CONTROL 1210-9131-079	EA
0062A			MAY BE USED AS AN ALTN 1210-9131-079	
0062B			FOR ITEM 36 (PRINTER CONT) 1210-9131-079	
0063	AR	0972394-0001	LUBRICANT,CORROSION PREVENTIVE	EA
0064	00001.000	0974043-0001	STRAP,SHORTING 1209-4043-008	EA
0065	00004.000	0972969-0008	SCREW,6-20 X 3/4 HEX WASHER HEAD	EA
0066	00000.000	0972969-0014	SCREW 8-18 X 3/4 THRD CTG HEX WASHER HD	EA

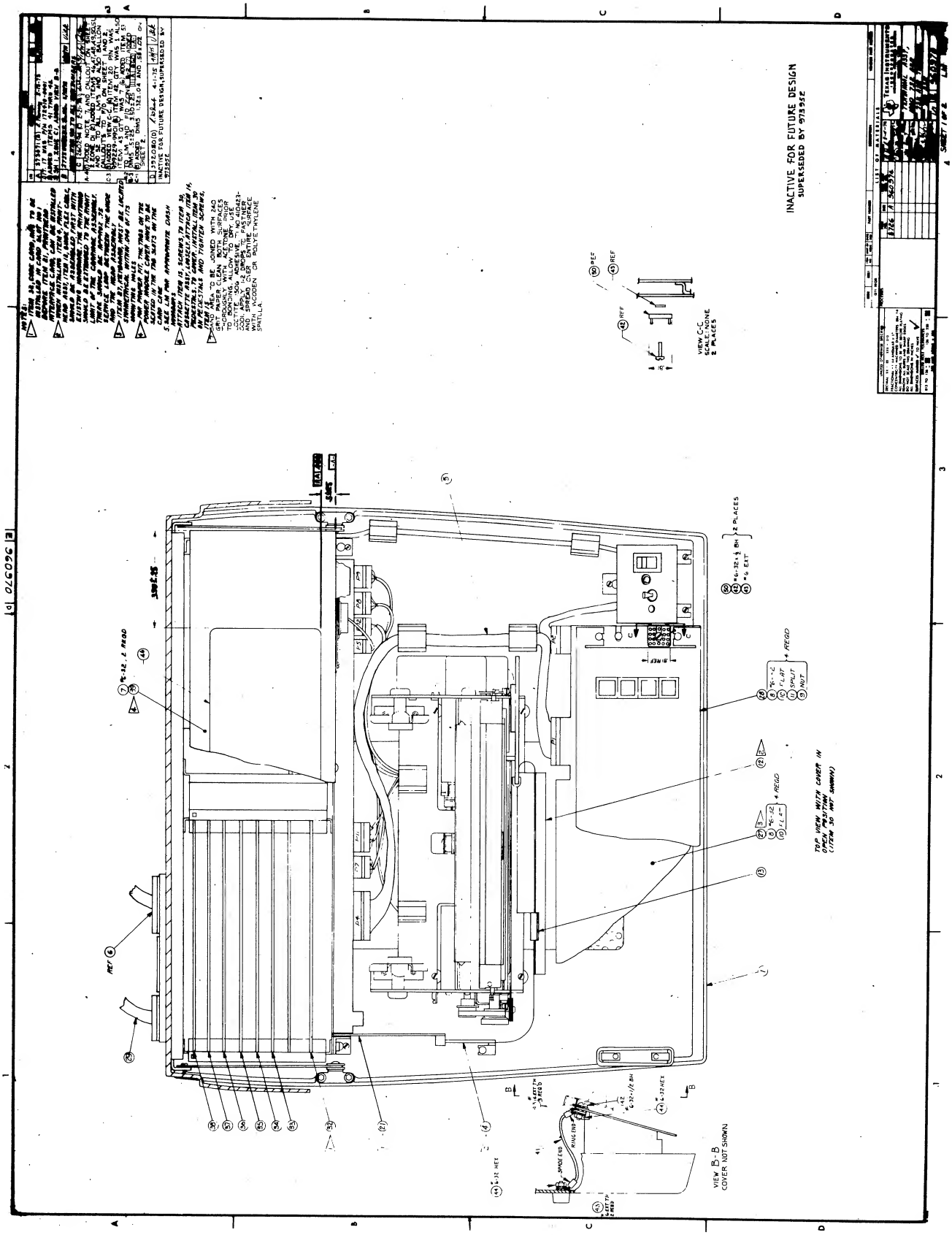
INACTIVE FOR FUTURE DESIGN
SUPERSEDED BY 973952
VIEW C-C
SCALE: NONE
2 PLACES
TOP VIEW WITH COVER IN
OPEN POSITION
(ITEM 30 NOT SHOWN)
VIEW B-B
COVER NOT SHOWN
SPACE END
RING END
INACTIVE FOR FUTURE DESIGN, SUPERSEDED BY 973952

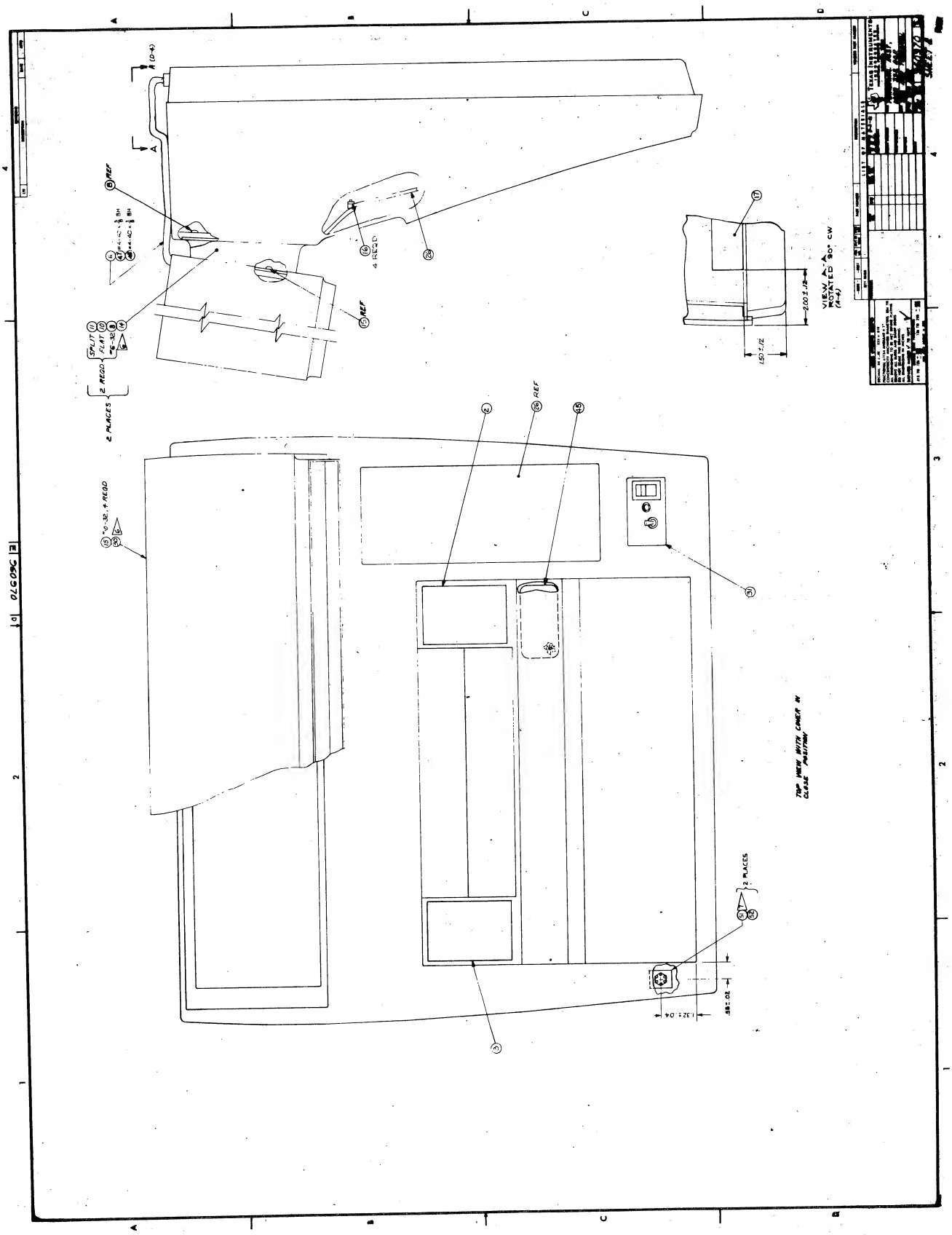

VIEW A-A
ROTATED 90° CW
(A-4)
TOP VIEW WITH COVER IN
CLOSE POSITION
2 PLACES
2 REQD
SPLIT
FLAT
4 REQD
REF

OCTOBER 31, 1975 LIST OF MATERIAL

PART NUMBER REV DESCRIPTION.....
960970 D TERMINAL ASSY,MOD 732 ASR

ITEM.	QUANTITY.	COMPONENT..	DESCRIPTION.....	UM	I
0001	00001.000	959404-0001	PRINTER ASSY,COMMON (10A) 1209-9404-085	EA	
0002	00001.000	960110-0001	NAMEPLATE,BLANK 1209-0110-010	EA	
0003	00001.000	960110-0003	NAMEPLATE,SILENT 700 ASR 1209-1031-007	EA	
0004	00001.000	959422-0001	PRINT HEAD ASSY,EPN 1-4 1209-9422-076	EA	
0005	00001.000	959370-0001	CABLE ASSY,KEYBOARD 1209-9370-090	EA	
0006	00001.000	959371-0001	CABLE ASSY,CASSETTE 1209-9371-052	EA	
0007	00002.000	418293-0027	SCREW 6-32 UNC-2A X .312 PAN HEAD CRES QPL- MS1957-27	EA	
0008	00012.000	418293-0028	SCREW 6-32 UNC-2A X .375 PAN HEAD CRES QPL- MS1957-28	EA	
0009	00004.000	411115-0064	NUT,PLAIN 6-32 UNC-2B HEX CRES QPL- MS35649-264	EA	
0010	00012.000	418154-0058	WASHER,FLAT #6 CRES QPL- NAS620-C6	EA	
0011	00008.000	418431-0025	LOCKWASHER # 6 SPLIT,HELICAL CRES QPL- NAS1676-C6	EA	
0012	00001.000	959290-0001	GUIDE,FLEX CABLE 1209-9290-013	EA	
0013	00001.000	959418-0001	CLIP SUBASSY,FLEX CABLE 1209-9418-028	EA	
0014	00002.000	960101-0001	PEDESTAL,MACHINED 1209-0101-022	EA	
0015	00004.000	418255-0061	SCREW 10-32 UNF-2A X .375 PAN HEAD CRES QPL- MS51958-61	EA	
0016	00004.000	772814-0001	FASTENER PUSH-ON RECTANGULAR	EA	
0017	00001.000	962571-0001	PLATE,IDENTIFICATION	EA	
0018	REF	959222-9901	SPECIFICATION,EQUIPMENT	EA	
0019	00001.000	959228-9701	MANUAL,OPERATOR (BAUDOT) 1209-9228-000	EA	
0020	REF	971463-9901	SYSTEM TEST FLOW,700 ASR/KSR/PDT D TERM	EA	
0021	00001.000	959141-0001	PRINTHEAD INTERFACE 1210-9141-108	EA	
0026	00001.000	960111-0001	PANEL,BLANK OPTION	EA	
0027	00001.000	959325-0001	KEYBOARD,BAUDOT	EA	
0028	00001.000	960921-0001	COVER,KEYBOARD-BAUDOT 1209-0921-004	EA	
0029	00001.000	959372-0001	CABLE ASSY,EIA INTERFACE-300 BAUD 1209-9372-046	EA	
0030	00001.000	959389-0003	CASSETTE ASSY,DUAL-BAUDOT 1209-1524-013	EA	
0031	00001.000	960113-0001	PANEL,POWER SWITCH	EA	
0032	00001.000	959137-0002	PRINTER CODE,BAUDOT-U.S.FIGURES 1210-1501-015	EA	
0033	00001.000	960881-0001	DUAL CODE ANSWER BACK MEMORY 1210-0881-019	EA	
0034	00001.000	959147-0001	REPLACED BY 981310-1 1210-9147-064	EA	
0035	00001.000	959133-0001	BAUDOT TRANSMIT/RECEIVE 1209-9133-010	EA	
0039	00001.000	960944-0001	COVER,POWER MODULE 1209-0944-019	EA	
0040	00001.000	971415-0001	CLEANING KIT-CASSETTE TRANSPORT 1209-1415-005	EA	
0041	00001.000	960967-0001	LEAD,ELECTRICAL-GRD 1209-0967-036	EA	
0042	00003.000	418293-0030	SCREW 6-32 UNC-2A X .500 PAN HEAD CRES QPL- MS1957-30	EA	
0043	00007.000	411101-0058	LOCKWASHER #6 EXTERNAL TOOTH CRES QPL- MS35335-58	EA	
0044	00002.000	416453-0022	NUT,PLAIN 6-32 UNC-2B HEX CRES,SMALL QPL- NAS671C6	EA	
0045	00001.000	960141-0001	LABEL,SERVICE	EA	
0046	00001.000	971412-0001	LABEL,PAPER LOADING	EA	
0047	00002.000	418293-0018	SCREW 4-40 UNC-2A X .625 PAN HEAD CRES QPL- MS1957-18	EA	

OCTOBER 31, 1975 LIST OF MATERIAL

PART NUMBER 960970 REV D DESCRIPTION..... TERMINAL ASSY,MOD 732 ASR

ITEM.	QUANTITY.	COMPONENT..	DESCRIPTION.....	UM	I
0048	00002.000	418293-0015	SCREW 4-40 UNC-2A X .375 PAN HEAD CRES QPL- MS1957-15	EA	
0049	00001.000	959230-9701	732/733 ASR QUICK REFERENCE CARD 1209-9230-000	EA	
0050	00002.000	539665-0005	FASTENER,3M #3220	EA	
0051	00002.000	971475-0001	FASTENER,MODIFIED	EA	
0052	AR	410423-0001	ADHESIVE GEN PURP CYANOACRYLATE TYPE 1 SEE- TI DRAWING	BT	

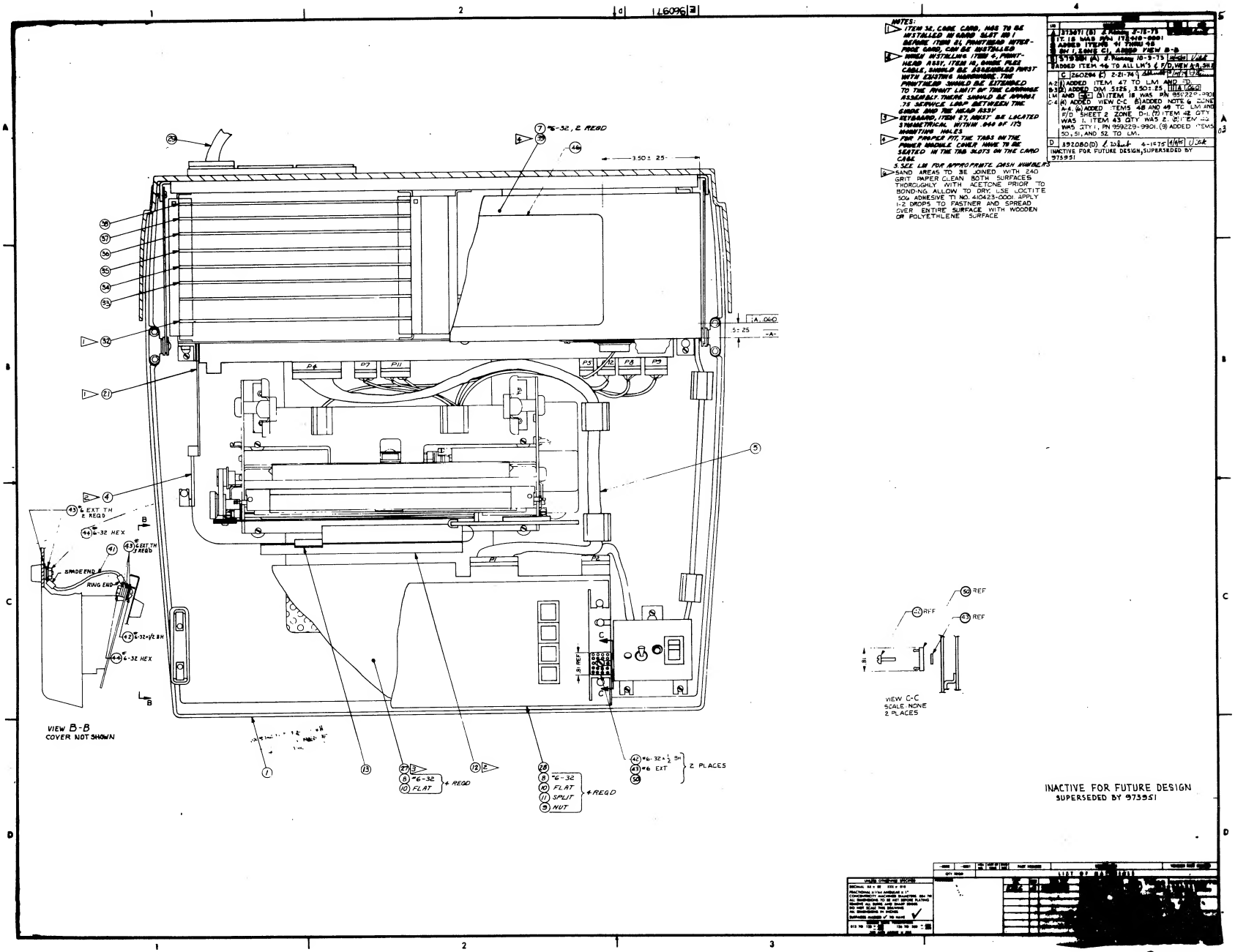
NOTES:
1 ITEM 32, CODE CARD, HAS TO BE INSTALLED IN CARD SLOT NO 1 BEFORE ITEM 21, PRINTHEAD INTERFACE CARD, CAN BE INSTALLED
2 WHEN INSTALLING ITEM 4, PRINTHEAD ASSY, ITEM 18, GUIDE FLEX CABLE, SHOULD BE ASSEMBLED FIRST WITH EXISTING HARDWARE. THE PRINTHEAD SHOULD BE EXTENDED TO THE FRONT LIMIT OF THE CARRIAGE ASSEMBLY. THERE SHOULD BE APPROX .75 SERVICE LOOP BETWEEN THE GUIDE AND THE HEAD ASSY
3 KEYBOARD, ITEM 27, MUST BE LOCATED SYMMETRICAL WITHIN .040 OF ITS MOUNTING HOLES
4 FOR PROPER FIT, THE TABS ON THE POWER MODULE COVER HAVE TO BE SEATED IN THE TAB SLOTS ON THE CARD CAGE
5. SEE LM FOR APPROPRIATE DASH NUMBERS
6 SAND AREAS TO BE JOINED WITH 240 GRIT PAPER CLEAN BOTH SURFACES THOROUGHLY WITH ACETONE PRIOR TO BONDING ALLOW TO DRY. USE LOCTITE 506 ADHESIVE TI NO. 410423-0001. APPLY 1-2 DROPS TO FASTNER AND SPREAD OVER ENTIRE SURFACE WITH WOODEN OR POLYETHLENE SURFACE
A 373371 (B) 2-15-75
B 17.18 WAS P/N 171410-0001
C ADDED ITEMS 41 THRU 45
D 1 ZONE C1, ADDED VIEW B-B
E 373351 (A) 2-15-75
F ADDED ITEM 46 TO ALL LM'S & F/D, VIEW A-A, SH 2
C 260294 (C) 2-21-74
A-2 (1) ADDED ITEM 47 TO LM AND F/D.
B-3 (2) ADDED DIM .5±25, 3.50±.25
LM AND F/D (3) ITEM 18 WAS P/N 959229-9901
C-4 (4) ADDED VIEW C-C (5) ADDED NOTE 6 ZONE A-4. (6) ADDED ITEMS 48 AND 49 TO LM AND F/D SHEET 2 ZONE D-1. (7) ITEM 42 QTY WAS 1. ITEM 43 QTY WAS 2. (8) ITEM 44 WAS QTY 1, P/N 959229-9901. (9) ADDED ITEMS 50, 51, AND 52 TO LM.
D 392080 (D) 4-15-75
INACTIVE FOR FUTURE DESIGN, SUPERSEDED BY 973951
7 #6-32, 2 REQD
3.50 ± .25
.5 ± .25
A .060
-A-
P4
P7
P11
P5
P12
P8
P9
P1
P2
.81 REF
43 #6 EXT TH 2 REQD
44 #6-32 HEX
43 #6 EXT TH 2 REQD
SPADE END
RING END
42 #6-32 x 1/2 BH
44 #6-32 HEX
VIEW B-B
COVER NOT SHOWN
27 #6-32
8 FLAT
10 FLAT
4 REQD
28 #6-32
8 FLAT
10 SPLIT
9 NUT
4 REQD
42 #6-32 x 1/2 BH
43 #6 EXT
50
2 PLACES
50 REF
43 REF
.81
VIEW C-C
SCALE NONE
2 PLACES
INACTIVE FOR FUTURE DESIGN
SUPERSEDED BY 973951
960971

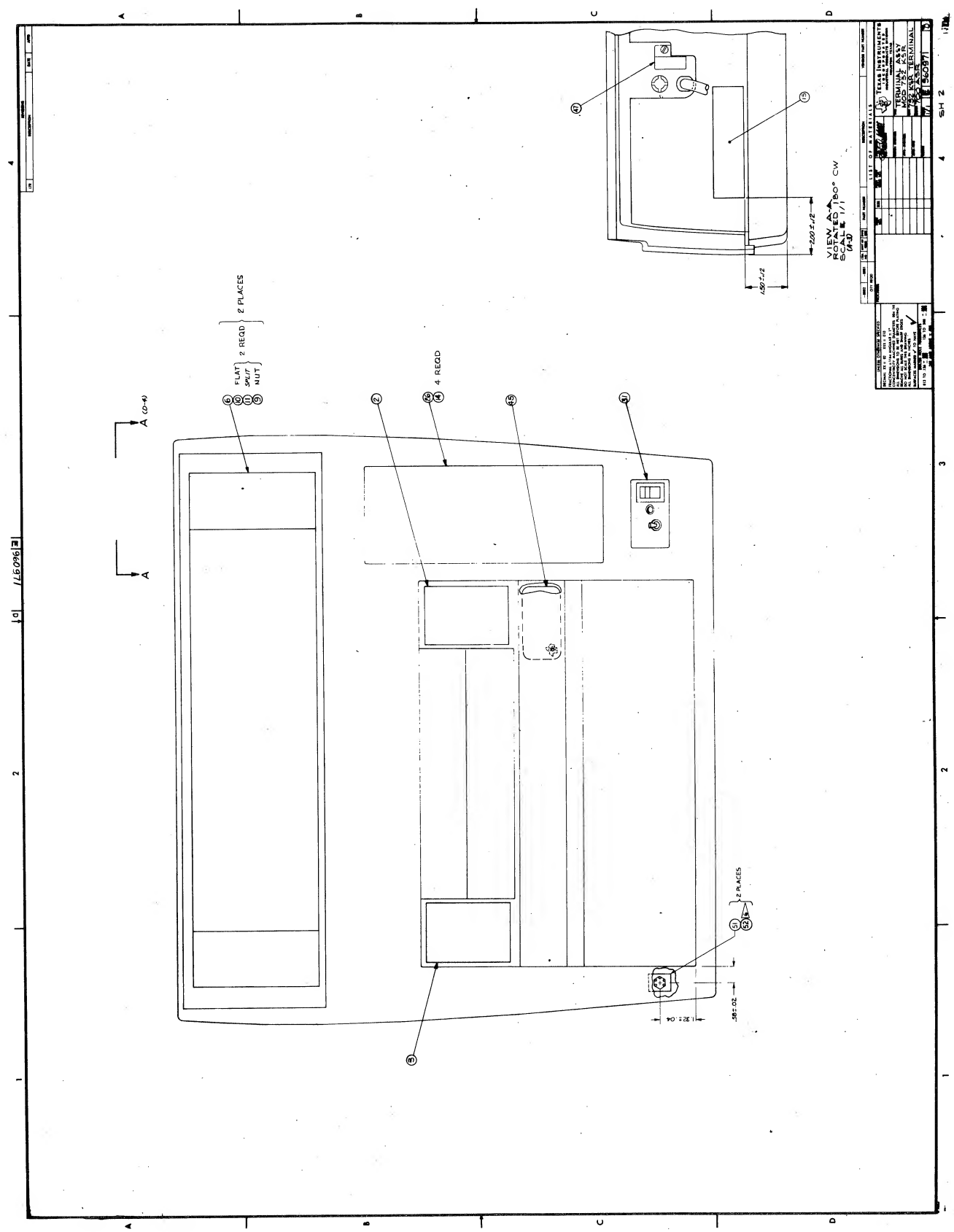

VIEW A-A
ROTATED 180° CW
SCALE 1/1
(A-3)
2.00±.12
1.50±.12
FLAT
SPLIT
NUT
2 REQD
2 PLACES
4 REQD
A (D-4)
A
2 PLACES
.58±.02
1.32±.04
TEXAS INSTRUMENTS
TERMINAL ASSY
MOD 752 KSR
752 KSR TERMINAL
SH 2

OCTOBER 31, 1975 L I S T O F M A T E R I A L

PART NUMBER REV DESCRIPTION.....
960971 D TERMINAL ASSY,MOD 732 KSR

ITEM.	QUANTITY.	COMPONENT..	DESCRIPTION.....	UM	I
0001	00001.000	959404-0001	PRINTER ASSY,COMMON (10A) 1209-9404-085	EA	
0002	00001.000	960110-0001	NAMEPLATE,BLANK 1209-0110-010	EA	
0003	00001.000	960110-0002	NAMEPLATE,SILENT 700 1209-1030-006	EA	
0004	00001.000	959422-0001	PRINT HEAD ASSY,EPN 1-4 1209-9422-076	EA	
0005	00001.000	959370-0001	CABLE ASSY,KEYBOARD 1209-9370-090	EA	
0006	00002.000	960108-0001	PLATE,DRESS KSR 1209-0108-021	EA	
0007	00002.000	418293-0027	SCREW 6-32 UNC-2A X .312 PAN HEAD CRES QPL- MS1957-27	EA	
0008	00008.000	418293-0028	SCREW 6-32 UNC-2A X .375 PAN HEAD CRES QPL- MS1957-28	EA	
0009	00008.000	411115-0064	NUT,PLAIN 6-32 UNC-2B HEX CRES QPL- MS35649-264	EA	
0010	00012.000	418154-0058	WASHER,FLAT #6 CRES QPL- NAS620-C6	EA	
0011	00008.000	418431-0025	LOCKWASHER # 6 SPLIT,HELICAL CRES QPL- NAS1676-C6	EA	
0012	00001.000	959290-0001	GUIDE,FLEX CABLE 1209-9290-013	EA	
0013	00001.000	959418-0001	CLIP SUBASSY,FLEX CABLE 1209-9418-028	EA	
0014	00004.000	772814-0001	FASTENER PUSH-ON RECTANGULAR	EA	
0015	00001.000	962571-0001	PLATE,IDENTIFICATION	EA	
0016	REF	959223-9901	SPEC,EQUIPMENT	EA	
0017	00001.000	959228-9701	MANUAL,OPERATOR (BAUDOT) 1209-9228-000	EA	
0018	REF	971463-9901	SYSTEM TEST FLOW,700 ASR/KSR/PDT D TERM	EA	
0021	00001.000	959141-0001	PRINTHEAD INTERFACE 1210-9141-108	EA	
0026	00001.000	960111-0001	PANEL,BLANK OPTION	EA	
0027	00001.000	959325-0001	KEYBOARD,BAUDOT	EA	
0028	00001.000	960921-0001	COVER,KEYBOARD-BAUDOT 1209-0921-004	EA	
0029	00001.000	959372-0001	CABLE ASSY,EIA INTERFACE-300 BAUD 1209-9372-046	EA	
0029	00001.000	959384-0001	CABLE ASSY,TTY INTERFACE 1209-9384-036	EA	
0031	00001.000	960113-0001	PANEL,POWER SWITCH	EA	
0032	00001.000	959137-0002	PRINTER CODE,BAUDOT-U.S.FIGURES 1210-1501-015	EA	
0033	00001.000	960881-0001	DUAL CODE ANSWER BACK MEMORY 1210-0881-019	EA	
0034	00001.000	959173-0001	BOARD ASSY,TERMINAL CONTROL-KSR 1210-9173-091	EA	
0035	00001.000	959133-0001	BAUDOT TRANSMIT/RECEIVE 1209-9133-010	EA	
0038	00001.000	959171-0002	TTY INTERFACE-NEUTRAL 1210-1502-044	EA	
0039	00001.000	960944-0001	COVER,POWER MODULE 1209-0944-019	EA	
0041	00001.000	960967-0001	LEAD,ELECTRICAL-GRD 1209-0967-036	EA	
0042	00003.000	418293-0030	SCREW 6-32 UNC-2A X .500 PAN HEAD CRES QPL- MS1957-30	EA	
0043	00007.000	411101-0058	LOCKWASHER #6 EXTERNAL TOOTH CRES QPL- MS35335-58	EA	
0044	00002.000	416453-0022	NUT,PLAIN 6-32 UNC-2B HEX CRES,SMALL QPL- NAS671C6	EA	
0045	00001.000	960141-0001	LABEL,SERVICE	EA	
0046	00001.000	971412-0001	LABEL,PAPER LOADING	EA	
0047	00001.000	971461-0001	COVER,CONNECTOR 1209-1461-006	EA	
0050	00002.000	539665-0005	FASTENER,3M #3220	EA	
0051	00002.000	971475-0001	FASTENER,MODIFIED	EA	
0052	AR	410423-0001	ADHESIVE GEN PURP CYANOACRYLATE TYPE 1 SEE- TI DRAWING	BT	

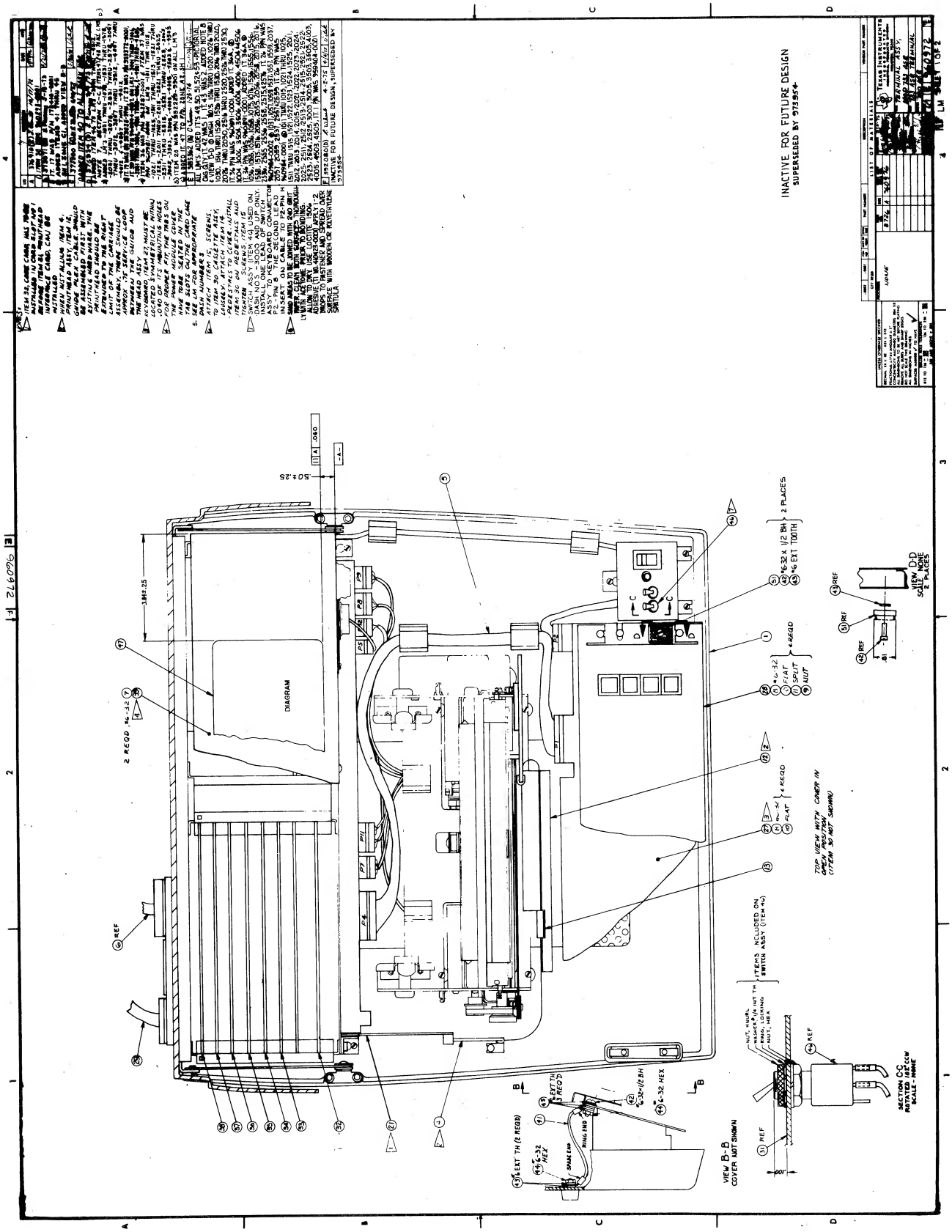
INACTIVE FOR FUTURE DESIGN
SUPERSEDED BY 973954
DIAGRAM
VIEW B-B
COVER NOT SHOWN
TOP VIEW WITH COVER IN OPEN POSITION (ITEM 30 NOT SHOWN)
VIEW D-D
SCALE NONE
2 PLACES
SECTION CC
ROTATED 90° CCW
SCALE NONE

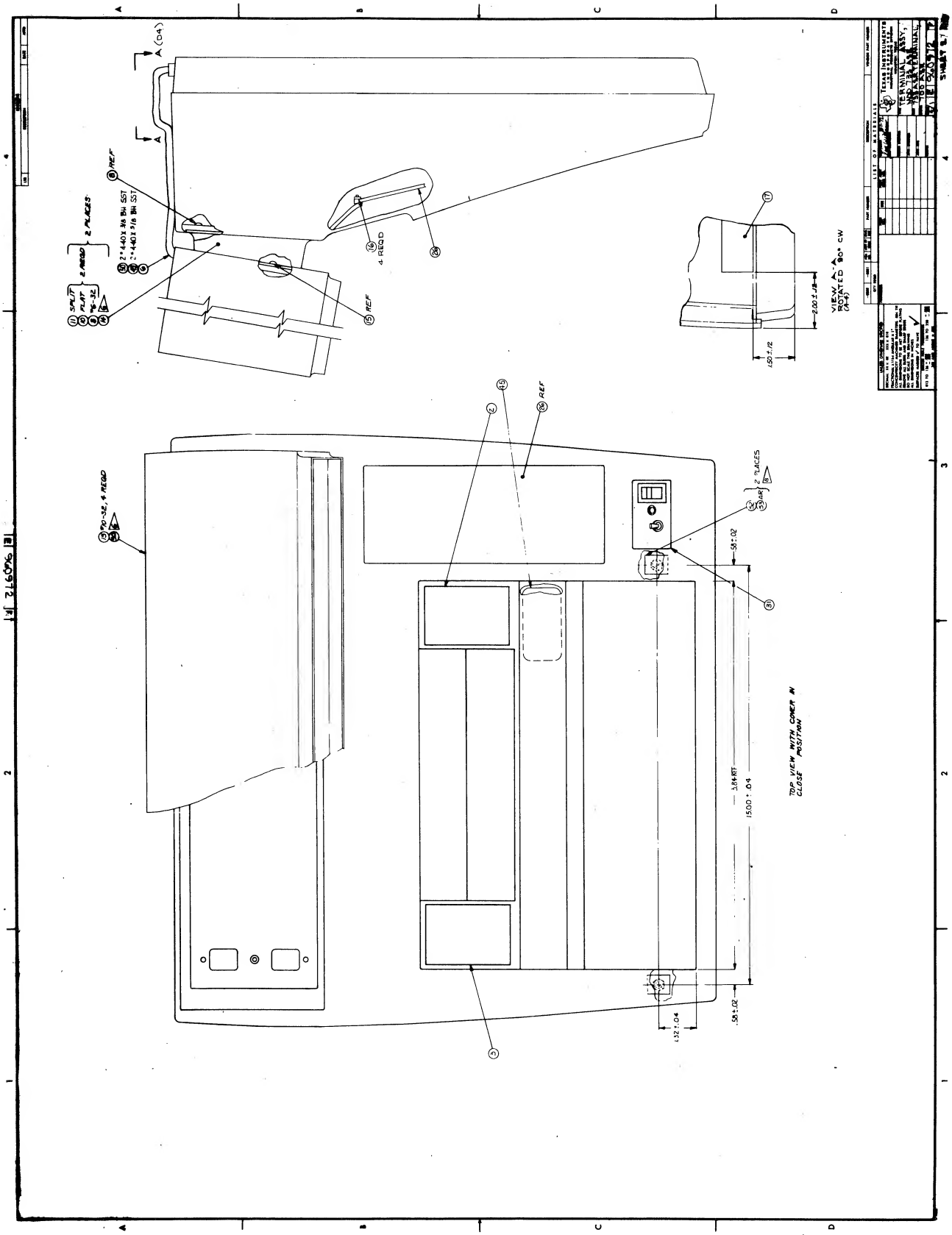

PART NUMBER	REV	DESCRIPTION
960972	F	TERMINAL ASSY,MOD 733 ASR

ITEM.	QUANTITY.	COMPONENT..	DESCRIPTION	UM	I
0001	00001.000	959404-0002	PRINTER ASSY,COMMON (14A) 1209-1506-512	EA	
0002	00001.000	960110-0001	NAMEPLATE,BLANK 1209-0110-010	EA	
0003	00001.000	960110-0003	NAMEPLATE,SILENT 700 ASR 1209-1031-007	EA	
0004	00001.000	959422-0001	PRINT HEAD ASSY,EPN 1-4 1209-9422-076	EA	
0005	00001.000	959370-0001	CABLE ASSY,KEYBOARD 1209-9370-090	EA	
0006	00001.000	959371-0001	CABLE ASSY,CASSETTE 1209-9371-052	EA	
0007	00002.000	418293-0027	SCREW 6-32 UNC-2A X .312 PAN HEAD CRES QPL- MS1957-27	EA	
0008	00012.000	418293-0028	SCREW 6-32 UNC-2A X .375 PAN HEAD CRES QPL- MS1957-28	EA	
0009	00004.000	411115-0064	NUT,PLAIN 6-32 UNC-2B HEX CRES QPL- MS35649-264	EA	
0010	00012.000	418154-0058	WASHER,FLAT #6 CRES QPL- NAS620-C6	EA	
0011	00008.000	418431-0025	LOCKWASHER # 6 SPLIT,HELICAL CRES QPL- NAS1676-C6	EA	
0012	00001.000	959290-0001	GUIDE,FLEX CABLE 1209-9290-013	EA	
0013	00001.000	959418-0001	CLIP SUBASSY,FLEX CABLE 1209-9418-028	EA	
0014	00002.000	960101-0001	PEDESTAL,MACHINED 1209-0101-022	EA	
0015	00004.000	418255-0061	SCREW 10-32 UNF-2A X .375 PAN HEAD CRES QPL- MS51958-61	EA	
0016	00004.000	772814-0001	FASTENER PUSH-ON RECTANGULAR	EA	
0017	00001.000	962571-0001	PLATE,IDENTIFICATION	EA	
0018	REF	959220-9901	SPECIFICATION,EQUIPMENT	EA	
0019	00001.000	959227-9701	MANUAL,733ASR OPERATORS GUIDE 1209-9227-000	EA	
0020	REF	971463-9901	SYSTEM TEST FLOW,700 ASR/KSR/PDT D TERM	EA	
0021	00001.000	959141-0001	PRINTHEAD INTERFACE 1210-9141-108	EA	
0026	00001.000	960984-0002	AUTO ANSWER OPTION KIT-EIA,W/ANSB 1209-1561-012	EA	
0026	00001.000	960111-0001	PANEL,BLANK OPTION	EA	
0027	00001.000	959327-0001	KEYBOARD,LIMITED ASCII	EA	
0027	00001.000	959326-0001	KEYBOARD,FULL ASCII-ENCODED	EA	
0028	00001.000	960919-0001	COVER,KEYBOARD-LIMITED ASCII 1209-0919-016	EA	
0028	00001.000	960920-0001	COVER,KEYBOARD FULL ASCII 1209-0920-013	EA	
0029	00001.000	959372-0001	CABLE ASSY,EIA INTERFACE-300 BAUD 1209-9372-046	EA	
0030	00001.000	959389-0001	CASSETTE ASSY,DUAL-ASCII 1209-9389-093	EA	
0031	00001.000	960113-0001	PANEL,POWER SWITCH	EA	
0032	00001.000	959137-0001	PRINTER CODE,ASCII 1210-9137-001	EA	
0033	00001.000	960881-0001	DUAL CODE ANSWER BACK MEMORY 1210-0881-019	EA	
0034	00001.000	959147-0001	REPLACED BY 981310-1 1210-9147-064	EA	
0035	00001.000	959135-0001	REPLACED BY 973905-1 1210-9135-082	EA	
0036	00001.000	971481-0001	AUTO DEVICE CONTROL-300 BAUD 1210-1481-033	EA	
0036	00001.000	971491-0002	MOTHER BOARD ACCESS,ASC 1210-1591-004	EA	
0037	00001.000	960981-0001	AUTOMATIC SEARCH CONTROL KIT,W/O MBAC 1209-0981-000	EA	
0039	00001.000	960944-0001	COVER,POWER MODULE 1209-0944-019	EA	
0040	00001.000	971415-0001	CLEANING KIT-CASSETTE TRANSPORT 1209-1415-005	EA	
0041	00001.000	960967-0001	LEAD,ELECTRICAL-GRD 1209-0967-036	EA	

OCTOBER 31, 1975 LIST OF MATERIAL

PART NUMBER	REV	DESCRIPTION.....
960972	F	TERMINAL ASSY,MOD 733 ASR

ITEM.	QUANTITY.	COMPONENT..	DESCRIPTION.....	UM	I
0042	00003.000	418293-0030	SCREW 6-32 UNC-2A X .500 PAN HEAD CRES QPL- MS1957-30	EA	
0043	00007.000	411101-0058	LOCKWASHER #6 EXTERNAL TOOTH CRES QPL- MS35335-58	EA	
0044	00002.000	416453-0022	NUT,PLAIN 6-32 UNC-2B HEX CRES,SMALL QPL- NAS671C6	EA	
0045	00001.000	960141-0001	LABEL,SERVICE	EA	
0047	00001.000	971412-0001	LABEL,PAPER LOADING	EA	
0048	00001.000	959230-9701	732/733 ASR QUICK REFERENCE CARD 1209-9230-000	EA	
0049	00002.000	418293-0018	SCREW 4-40 UNC-2A X .625 PAN HEAD CRES QPL- MS1957-18	EA	
0050	00002.000	418293-0015	SCREW 4-40 UNC-2A X .375 PAN HEAD CRES QPL- MS1957-15	EA	
0051	00002.000	539665-0005	FASTENER,3M #3220	EA	
0052	00002.000	971475-0001	FASTENER,MODIFIED	EA	
0053	AR	410423-0001	ADHESIVE GEN PURP CYANOACRYLATE TYPE 1 SEE- TI DRAWING	BT	

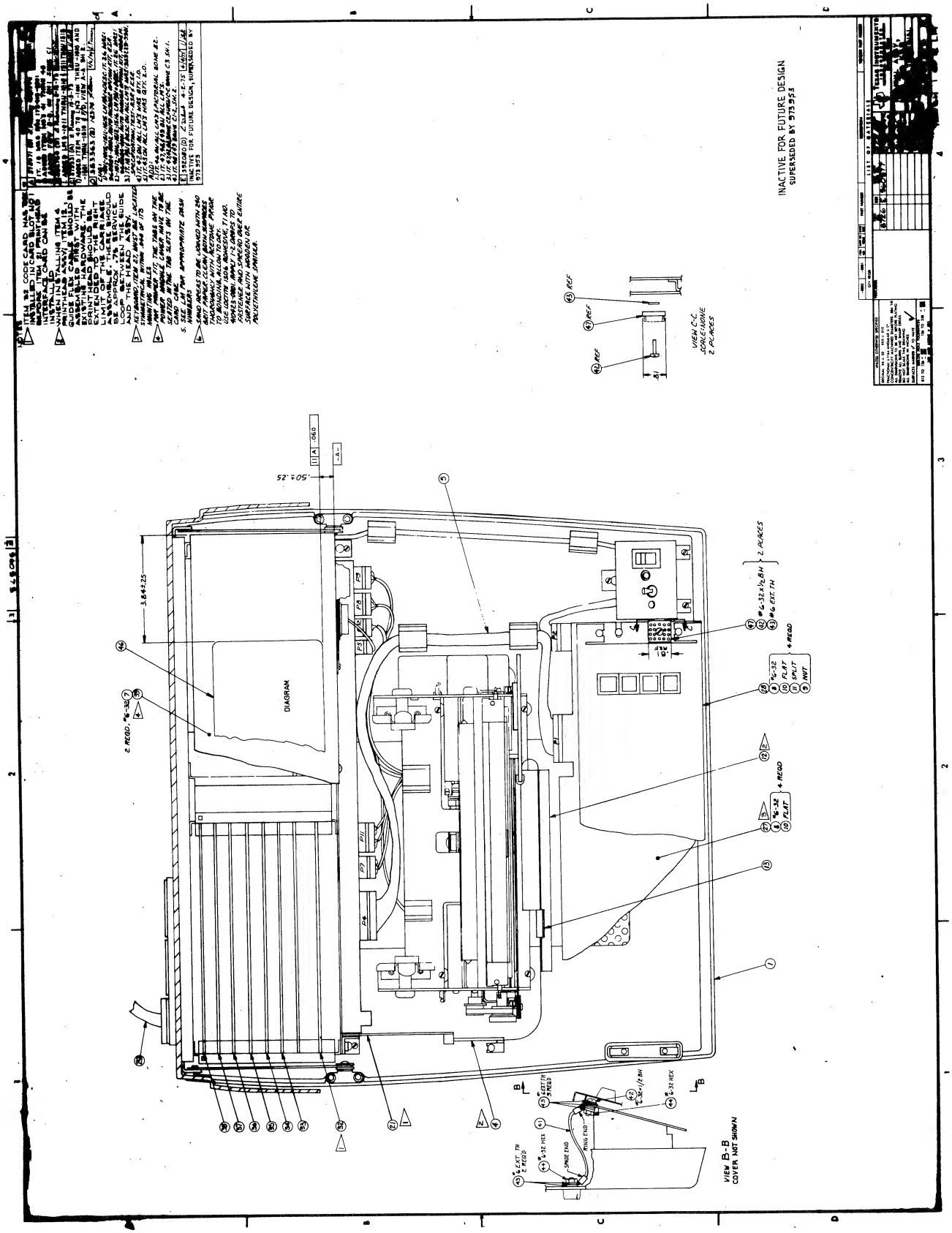
INACTIVE FOR FUTURE DESIGN
SUPERSEDED BY 973955
DIAGRAM
VIEW B-B
COVER NOT SHOWN
VIEW C-C
SCALE=NONE
2 PLACES

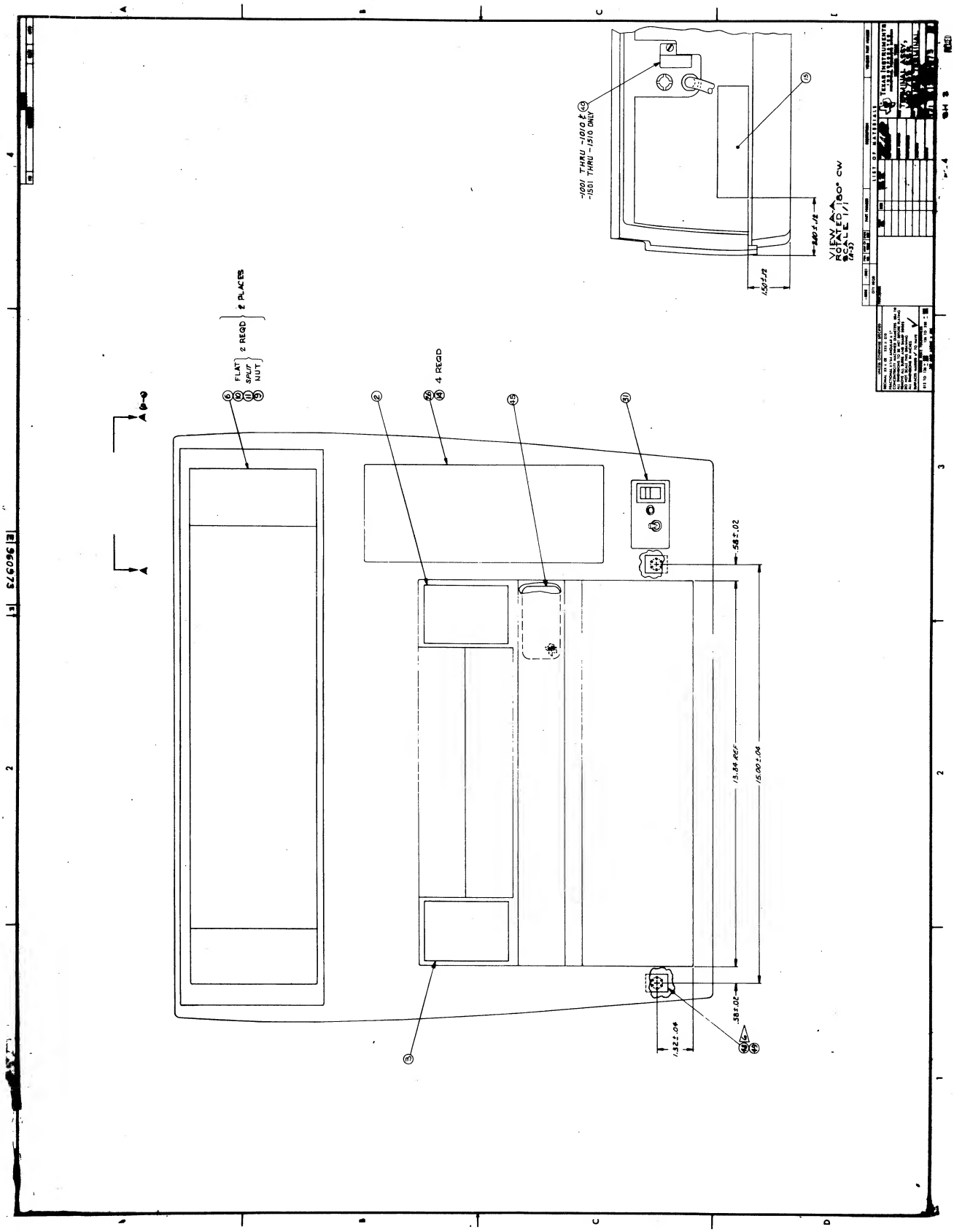
-1001 THRU -1010 ONLY
-1501 THRU -1510 ONLY
VIEW A-A
ROTATED 180° CW
SCALE 1/10
FLAT
SPLIT
NUT
2 REQD
2 PLACES
4 REQD
.58±.02
13.64 REF
15.00±.04
1.32±.04
.38±.02

PART NUMBER 960973 REV E DESCRIPTION..... TERMINAL ASSY,MOD 733 KSR

ITEM.	QUANTITY.	COMPONENT..	DESCRIPTION.....	UM	I
0001	00001.000	959404-0001	PRINTER ASSY,COMMON (10A) 1209-9404-085	EA	
0002	00001.000	960110-0001	NAMEPLATE,BLANK 1209-0110-010	EA	
0003	00001.000	960110-0002	NAMEPLATE,SILENT 700 1209-1030-006	EA	
0004	00001.000	959422-0001	PRINT HEAD ASSY,EPN 1-4 1209-9422-076	EA	
0005	00001.000	959370-0001	CABLE ASSY,KEYBOARD 1209-9370-090	EA	
0006	00001.000	960108-0001	PLATE,DRESS KSR 1209-0108-021	EA	
0007	00002.000	418293-0027	SCREW 6-32 UNC-2A X .312 PAN HEAD CRES QPL- MS1957-27	EA	
0008	00008.000	418293-0028	SCREW 6-32 UNC-2A X .375 PAN HEAD CRES QPL- MS1957-28	EA	
0009	00008.000	411115-0064	NUT,PLAIN 6-32 UNC-2B HEX CRES QPL- MS35649-264	EA	
0010	00012.000	418154-0058	WASHER,FLAT #6 CRES QPL- NAS620-C6	EA	
0011	00008.000	418431-0025	LOCKWASHER # 6 SPLIT,HELICAL CRES QPL- NAS1676-C6	EA	
0012	00001.000	959290-0001	GUIDE,FLEX CABLE 1209-9290-013	EA	
0013	00001.000	959418-0001	CLIP SUBASSY,FLEX CABLE 1209-9418-028	EA	
0014	00004.000	772814-0001	FASTENER PUSH-ON RECTANGULAR	EA	
0015	00001.000	962571-0001	PLATE,IDENTIFICATION	EA	
0016	REF	959221-9901	SPEC,EQUIPMENT	EA	
0017	00001.000	959227-9701	MANUAL,733ASR OPERATORS GUIDE 1209-9227-000	EA	
0018	REF	971463-9901	SYSTEM TEST FLOW,700 ASR/KSR/PDT D TERM	EA	
0021	00001.000	959141-0001	PRINTHEAD INTERFACE 1210-9141-108	EA	
0026	00001.000	960984-0002	AUTO ANSWER OPTION KIT-EIA,W/ANSB 1209-1561-012	EA	
0026	00001.000	960984-0003	AUTO ANSWER OPTION KIT,MODEM,W/O ANSB	EA	
0026	00001.000	960111-0001	PANEL,BLANK OPTION	EA	
0027	00001.000	959327-0001	KEYBOARD,LIMITED ASCII	EA	
0028	00001.000	960919-0001	COVER,KEYBOARD-LIMITED ASCII 1209-0919-016	EA	
0028	00001.000	960920-0001	COVER,KEYBOARD FULL ASCII 1209-0920-013	EA	
0031	00001.000	960113-0001	PANEL,POWER SWITCH	EA	
0032	00001.000	959137-0001	PRINTER CODE,ASCII 1210-9137-001	EA	
0033	00001.000	960881-0001	DUAL CODE ANSWER BACK MEMORY 1210-0881-019	EA	
0034	00001.000	959173-0001	BOARD ASSY,TERMINAL CONTROL-KSR 1210-9173-091	EA	
0035	00001.000	959135-0001	REPLACED BY 973905-1 1210-9135-082	EA	
0036	00001.000	971481-0001	AUTO DEVICE CONTROL-300 BAUD 1210-1481-033	EA	
0038	00001.000	960887-0001	MODEM,ATL 1210-0887-019	EA	
0038	00001.000	960887-0003	MODEM,ATH 1210-1523-019	EA	
0039	00001.000	960944-0001	COVER,POWER MODULE 1209-0944-019	EA	
0041	00001.000	960967-0001	LEAD,ELECTRICAL-GRD 1209-0967-036	EA	
0042	00003.000	418293-0030	SCREW 6-32 UNC-2A X .500 PAN HEAD CRES QPL- MS1957-30	EA	
0043	00007.000	411101-0058	LOCKWASHER #6 EXTERNAL TOOTH CRES QPL- MS35335-58	EA	
0044	00002.000	416453-0022	NUT,PLAIN 6-32 UNC-2B HEX CRES,SMALL QPL- NAS671C6	EA	
0045	00001.000	960141-0001	LABEL,SERVICE	EA	
0046	00001.000	971412-0001	LABEL,PAPER LOADING	EA	
0047	00002.000	539665-0005	FASTENER,3M #3220	EA	
0048	00002.000	971475-0001	FASTENER,MODIFIED	EA	
0049	AR	410423-0001	ADHESIVE GEN PURP CYANOACRYLATE TYPE 1 SEE- TI DRAWING	BT	

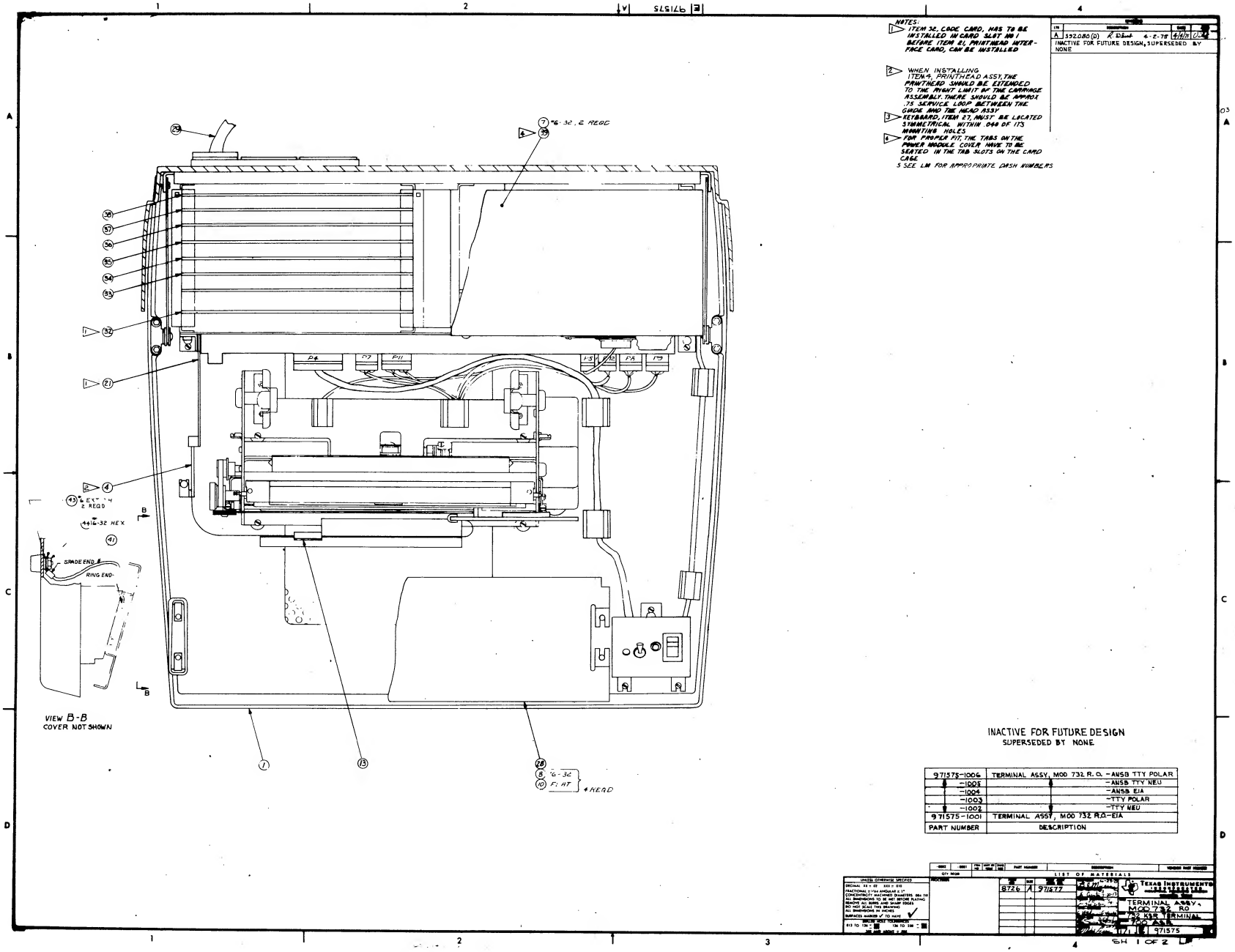

NOTES:
1 ITEM 32, CODE CARD, HAS TO BE INSTALLED IN CARD SLOT NO 1 BEFORE ITEM 21, PRINTHEAD INTERFACE CARD, CAN BE INSTALLED
2 WHEN INSTALLING ITEM 4, PRINTHEAD ASSY, THE PRINTHEAD SHOULD BE EXTENDED TO THE RIGHT LIMIT OF THE CARRIAGE ASSEMBLY. THERE SHOULD BE APPROX .75 SERVICE LOOP BETWEEN THE GUIDE AND THE HEAD ASSY
3 KEYBOARD, ITEM 27, MUST BE LOCATED SYMMETRICAL WITHIN .040 OF ITS MOUNTING HOLES
4 FOR PROPER FIT, THE TABS ON THE POWER MODULE COVER HAVE TO BE SEATED IN THE TAB SLOTS ON THE CARD CAGE
5 SEE LM FOR APPROPRIATE DASH NUMBERS
A 592080(D) 4-2-75 4/4/75
INACTIVE FOR FUTURE DESIGN, SUPERSEDED BY NONE
6-32, 2 REQD
6 EXT 2 REQD
4-16-32 HEX
SPADE END
RING END
VIEW B-B
COVER NOT SHOWN
6-32 FLAT 4 REQD
INACTIVE FOR FUTURE DESIGN
SUPERSEDED BY NONE
971575-1006 TERMINAL ASSY, MOD 732 R.O. -ANSB TTY POLAR
-1005 -ANSB TTY NEU
-1004 -ANSB EIA
-1003 -TTY POLAR
-1002 -TTY NEU
971575-1001 TERMINAL ASSY, MOD 732 R.O.-EIA
PART NUMBER DESCRIPTION
LIST OF MATERIALS
8726 A 971577
TEXAS INSTRUMENTS
TERMINAL ASSY, MOD 732 RO
732 KSR TERMINAL
700 ASR
971575
SH 1 OF 2

VIEW A-A
ROTATED 180° CW
SCALE 1/1
2 PLACES
471575
SH 2

OCTOBER 31, 1975 LIST OF MATERIAL

PART NUMBER REV DESCRIPTION.....
971575-1002 A TERMINAL ASSY,MOD 732 R.O
971575-1004

ITEM.	QUANTITY.	COMPONENT..	DESCRIPTION.....	UM	I
0001	00001.000	959404-0003	PRINTER ASSY,COMMON (RO) 1209-1513-000	EA	
0002	00001.000	960110-0001	NAMEPLATE,BLANK 1209-0110-010	EA	
0003	00001.000	960110-0002	NAMEPLATE,SILENT 700 1209-1030-006	EA	
0004	00001.000	959422-0001	PRINT HEAD ASSY,EPN 1-4 1209-9422-076	EA	
0006	00002.000	960108-0001	PLATE,DRESS KSR 1209-0108-021	EA	
0007	00002.000	418293-0027	SCREW 6-32 UNC-2A X .312 PAN HEAD CRES QPL- MS1957-27	EA	
0008	00004.000	418293-0028	SCREW 6-32 UNC-2A X .375 PAN HEAD CRES QPL- MS1957-28	EA	
0009	00004.000	411115-0064	NUT,PLAIN 6-32 UNC-2B HEX CRES QPL- MS35649-264	EA	
0010	00008.000	418154-0058	WASHER,FLAT #6 CRES QPL- NAS620-C6	EA	
0011	00004.000	418431-0025	LOCKWASHER # 6 SPLIT,HELICAL CRES QPL- NAS1676-C6	EA	
0013	00001.000	959418-0001	CLIP SUBASSY,FLEX CABLE 1209-9418-028	EA	
0014	00004.000	772814-0001	FASTENER PUSH-ON RECTANGULAR	EA	
0015	00001.000	962571-0001	PLATE,IDENTIFICATION	EA	
0016	REF	971573-9901	SPECIFICATION,EQUIPMENT	EA	
0017	00001.000	971579-9701	MANUAL,OPERATOR 732/733 RO 1209-1592-000	EA	
0018	REF	959229-9901	SPECIFICATION,TEST-ASR & KSR	EA	
0021	00001.000	959141-0001	PRINTHEAD INTERFACE 1210-9141-108	EA	
0026	00001.000	960111-0001	PANEL,BLANK OPTION	EA	
0028	00001.000	973230-0001	PANEL BLANK-732/733 R.O. 1209-3230-004	EA	
0029	00001.000	959384-0001	CABLE ASSY,TTY INTERFACE 1209-9384-036	EA	
0031	00001.000	960113-0003	PANEL,POWER SWITCH	EA	
0032	00001.000	959137-0002	PRINTER CODE,BAUDOT-U.S.FIGURES 1210-1501-015	EA	
0033	00001.000	960160-0001	TOP ACCESS CONNECTOR 1210-0160-026	EA	
0034	00001.000	959173-0001	BOARD ASSY,TERMINAL CONTROL-KSR 1210-9173-091	EA	
0035	00001.000	959133-0001	BAUDOT TRANSMIT/RECEIVE 1209-9133-010	EA	
0038	00001.000	959171-0002	TTY INTERFACE-NEUTRAL 1210-1502-044	EA	
0039	00001.000	960944-0001	COVER,POWER MODULE 1209-0944-019	EA	
0041	00001.000	960967-0001	LEAD,ELECTRICAL-GRD 1209-0967-036	EA	
0043	00002.000	411101-0058	LOCKWASHER #6 EXTERNAL TOOTH CRES QPL- MS35335-58	EA	
0044	00001.000	416453-0022	NUT,PLAIN 6-32 UNC-2B HEX CRES,SMALL QPL- NAS671C6	EA	
0045	00001.000	960141-0001	LABEL,SERVICE	EA	

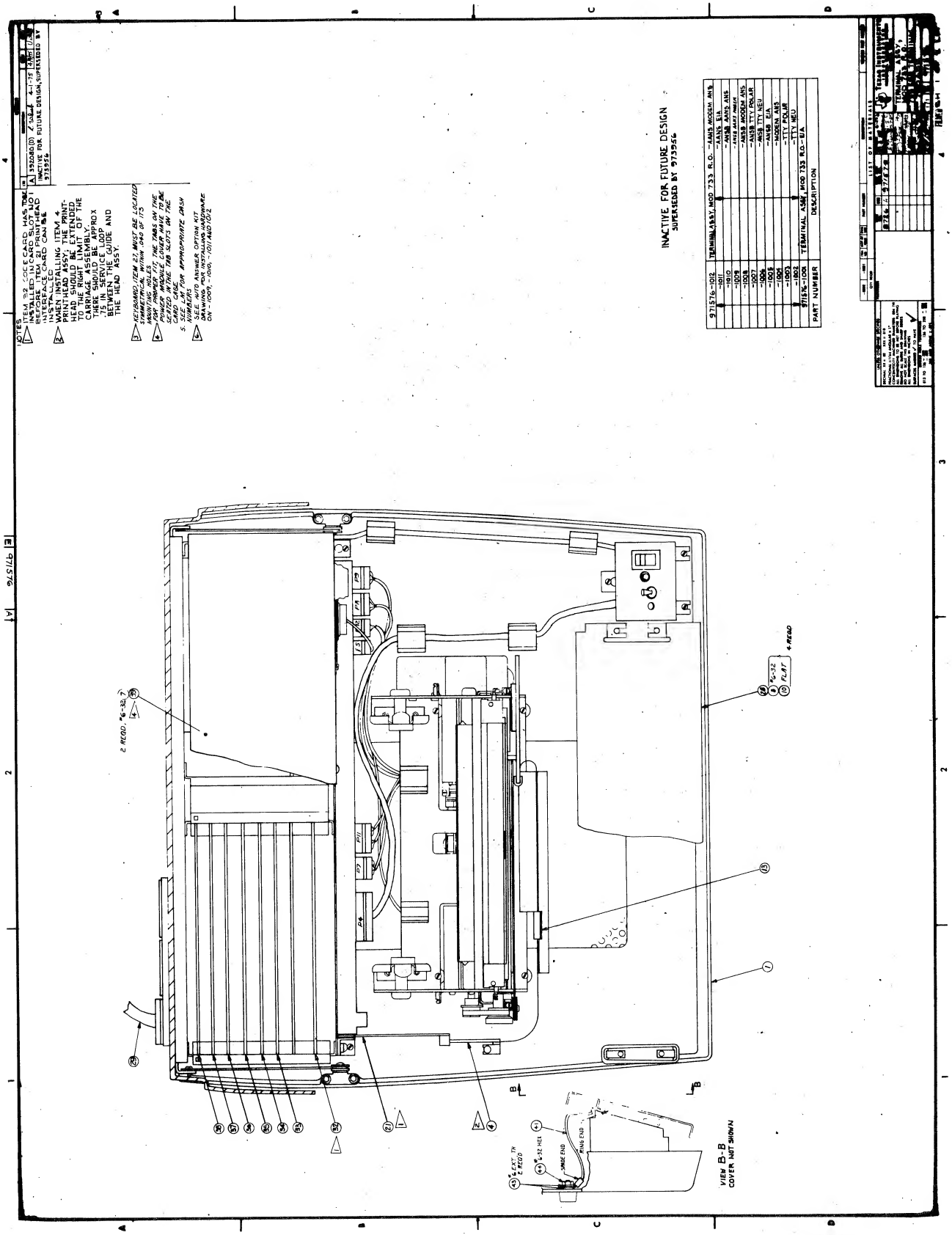
INACTIVE FOR FUTURE DESIGN
SUPERSEDED BY 973956
VIEW B-B
COVER NOT SHOWN

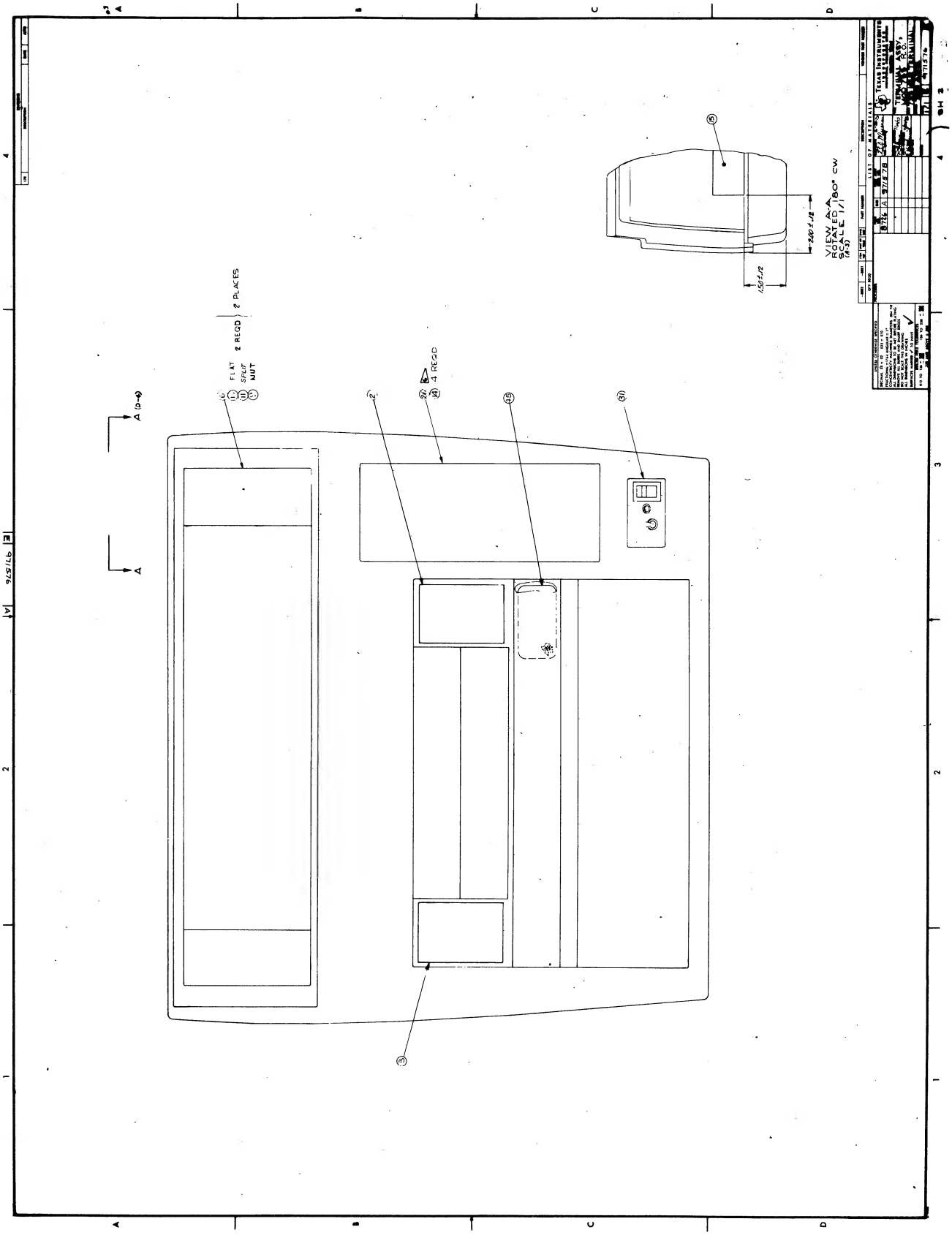
VIEW A-A
ROTATED 180° CW
SCALE 1/1
2 REQD
2 PLACES
FLAT
SPLIT
NUT
4 REQD
TEXAS INSTRUMENTS
971576

OCTOBER 31, 1975 L I S T O F M A T E R I A L

PART NUMBER REV DESCRIPTION.....
971576-1006 A TERMINAL ASSY,MOD 733 RO
971576-1011

ITEM.	QUANTITY.	COMPONENT..	DESCRIPTION.....	UM	I
0001	00001.000	959404-0003	PRINTER ASSY,COMMON (RO) 1209-1513-000	EA	
0002	00001.000	960110-0001	NAMEPLATE,BLANK 1209-0110-010	EA	
0003	00001.000	960110-0002	NAMEPLATE,SILENT 700 1209-1030-006	EA	
0004	00001.000	959422-0001	PRINT HEAD ASSY,EPN 1-4 1209-9422-076	EA	
0006	00002.000	960108-0001	PLATE,DRESS KSR 1209-0108-021	EA	
0007	00002.000	418293-0027	SCREW 6-32 UNC-2A X .312 PAN HEAD CRES QPL- MS1957-27	EA	
0008	00004.000	418293-0028	SCREW 6-32 UNC-2A X .375 PAN HEAD CRES QPL- MS1957-28	EA	
0009	00004.000	411115-0064	NUT,PLAIN 6-32 UNC-2B HEX CRES QPL- MS35649-264	EA	
0010	00008.000	418154-0058	WASHER,FLAT #6 CRES QPL- NAS620-C6	EA	
0011	00004.000	418431-0025	LOCKWASHER # 6 SPLIT,HELICAL CRES QPL- NAS1676-C6	EA	
0013	00001.000	959418-0001	CLIP SUBASSY,FLEX CABLE 1209-9418-028	EA	
0014	00004.000	772814-0001	FASTENER PUSH-ON RECTANGULAR	EA	
0015	00001.000	962571-0001	PLATE,IDENTIFICATION	EA	
0016	REF	971574-9901	SPECIFICATION,EQUIPMENT	EA	
0017	00001.000	971579-9701	MANUAL,OPERATOR 732/733 RO 1209-1592-000	EA	
0018	REF	959229-9901	SPECIFICATION,TEST-ASR & KSR	EA	
0021	00001.000	959141-0001	PRINTHEAD INTERFACE 1210-9141-108	EA	
0026	00001.000	960111-0001	PANEL,BLANK OPTION	EA	
0026	00001.000	960984-0002	AUTO ANSWER OPTION KIT-EIA,W/ANSB 1209-1561-012	EA	
0028	00001.000	973230-0001	PANEL BLANK-732/733 R.O. 1209-3230-004	EA	
0029	00001.000	959384-0001	CABLE ASSY,TTY INTERFACE 1209-9384-036	EA	
0031	00001.000	960113-0003	PANEL,POWER SWITCH	EA	
0032	00001.000	959137-0001	PRINTER CODE,ASCII 1210-9137-001	EA	
0033	00001.000	960881-0001	DUAL CODE ANSWER BACK MEMORY 1210-0881-019	EA	
0034	00001.000	959173-0001	BOARD ASSY,TERMINAL CONTROL-KSR 1210-9173-091	EA	
0035	00001.000	959135-0001	REPLACED BY 973905-1 1210-9135-082	EA	
0038	00001.000	959171-0002	TTY INTERFACE-NEUTRAL 1210-1502-044	EA	
0039	00001.000	960944-0001	COVER,POWER MODULE 1209-0944-019	EA	
0041	00001.000	960967-0001	LEAD,ELECTRICAL-GRD 1209-0967-036	EA	
0043	00002.000	411101-0058	LOCKWASHER #6 EXTERNAL TOOTH CRES QPL- MS35335-58	EA	
0044	00001.000	416453-0022	NUT,PLAIN 6-32 UNC-2B HEX CRES,SMALL QPL- NAS671C6	EA	
0045	00001.000	960141-0001	LABEL,SERVICE	EA	

NOTES:
1. ITEM 28 CODE CARD MUST BE INSTALLED IN CARD SLOT NO. 1 BEFORE ITEM 21 PRINTHEAD INTERFACE CARD CAN BE INSTALLED
2. FOR PROPER FIT, THE TABS ON THE POWER MODULE COVER (ITEM 31) MUST BE SEATED IN THE TAB SLOTS ON THE CARD CAGE
3. CARD SLOTS A3, A6, A7 (A8 ARE AVAILABLE FOR SPECIFIED OPTIONS; SEE SH 3 THIS DRAWING FOR CONFIGURATION
4. CLEAN RECESSED AREA THOROUGHLY WITH ALCOHOL PRIOR TO INSTALLING FASTENERS (ITEM 41). ALLOW TO DRY
5. INSTALL LABEL (ITEM 50) ON PLATE HINGE ASSY, P/N 959303-0001 (AT TERMINAL CONFIGURATION AREA) SUCH THAT LABEL IS READ FROM LEFT TO RIGHT UPON LIFTING THE COVER. MARK APPROPRIATE OPTIONS AND/OR SUBOPTIONS IF ANY ON TERMINAL CONFIGURATION LABEL, AT TERMINAL CONFIGURATION

NOTES CONT.
6. ALL PC BOARDS WITH SUBOPTIONS SHOULD HAVE CARD ASSY SUBOPTION STICKERS (ITEM 51) APPLIED (AT TERMINAL CONFIGURATION AREA) WITH SUBOPTIONS MARKED ON THEM WITH INK OR STAMP. STICKERS MAY BE PLACED ON THE PC BOARD IN ANY AREA.
7. MARK SERVICE LABEL (ITEM 35) AT TERMINAL CONFIGURATION AS FOLLOWS:

SALES ORDER NUMBER	BOX MARKED
1306	LEASE
1307	PURCHASE
1309	PURCHASE
1310	OEM
1311	LEASE

NOTES CONT.
8. FASTENER (ITEM 46) SHOULD BE FLUSH WITH TOP OF KEYBOARD COVER WITHIN .020 FOR PROPER LATCHING. IN SOME CASES OF EXTREME TOLERANCE BUILD-UP, THE ADDITION OF A #6 FLAT WASHER MAY BE REQUIRED BETWEEN THE TWO LOCK WASHERS TO MEET THIS CONDITION
9. IDENTIFICATION PLATE, AC MODULE COVER, AND FUSE RATING LABEL ARE SHOWN ON THIS DRAWING AND ARE FOR REFERENCE ONLY
10. THE AC MODULE COVER IS MOUNTED TO THE AC MODULE USING 2 SCREWS (ITEM 7) AND 2 LOCKWASHERS (ITEM 55)

A	413854 (C)	7-26-76	
1. ITEM 88 ADDED TO LM			
B	CN423878		
ADDED ITEMS 88 & 80			

LIST OF MATERIALS

TEXAS INSTRUMENTS INCORPORATED

TERMINAL ASSEMBLY MODEL 733 RECEIVE ONLY 733 K.S. TERMINAL 700 ASR

973946

SH 1 OF 3 LM

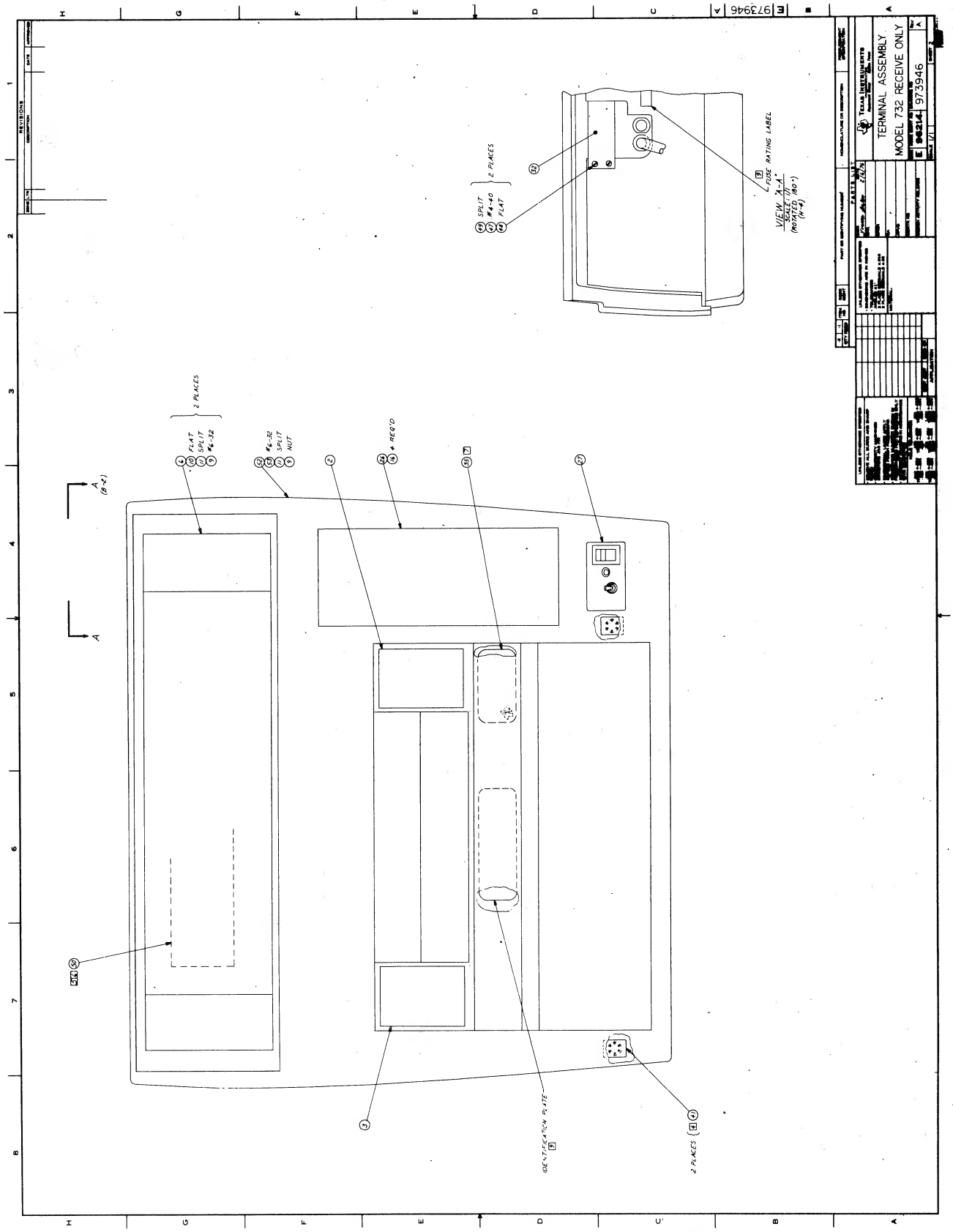
TERMINAL ASSEMBLY
MODEL 732 RECEIVE ONLY
973946
VIEW "A-A"
SCALE: 1/1
(ROTATED 180°)
(H-4)
FUSE RATING LABEL
2 PLACES
SPLIT
#4-40
FLAT
FLAT
SPLIT
#6-32
#6-32
SPLIT
NUT
4 REQ'D
IDENTIFICATION PLATE
2 PLACES
A
(B-2)
A

MODEL 732 R.O. CONFIGURATION

ASSEMBLY NUMBER 973946-0001	CONFIGURATION 1	CONFIGURATION 2
CABLE	TTY CABLE 959384-0001 (INCLUDED IN TTY KIT)	EIA CABLE 959372-0001
A8	TTY-POLAR 959171-0001 OR NEUTRAL 959171-0002 (INCLUDED IN TTY KIT)	BLANK
A7	BLANK	BLANK
A6	BLANK	BLANK
A3	ABM 960881-0001 OR BLANK (INCLUDED IN ABM KIT)	ABM 960881-0001 OR BLANK (INCLUDED IN ABM KIT)

THE FOLLOWING MAY BE USED WITH ANY LISTED BAUDOT CONFIGURATION:
PAPER WINDER (960133-0001), STAND (960134-0002)

MAY 13, 1977 LIST OF MATERIAL

PART NUMBER	REV	DESCRIPTION
0973946-0001	B	TERMINAL ASSY,MODEL 732 RECEIVE ONLY

ITEM.	QUANTITY.	COMPONENT..	DESCRIPTION	UM
0001	00001.000	0959404-0002	PRINTER ASSY,COMMON (14A) 1209-1506-706	EA
0002	00001.000	0960110-0001	NAMEPLATE,BLANK 1209-0110-010	EA
0003	00001.000	0960110-0002	NAMEPLATE,SILENT 700 1209-1030-006	EA
0006	00002.000	0960108-0001	PLATE,DRESS KSR 1209-0108-032	EA
0007	00004.000	0972988-0027	SCREW 6-32 X .312 PAN HEAD CRES	EA
0008	00001.000	0972988-0028	SCREW 6-32 X .375 PAN HEAD CRES	EA
0009	00006.000	0411115-0064	NUT,PLAIN 6-32 UNC-2B HEX CRES QPL - M-35649-264	EA
0010	00005.000	0416622-0013	WASHER #6 FLAT QPL - A-960C6L	EA
0011	00006.000	0411104-0136	WASHER #6 LOCKSPLIT QPL - M-35338-136	EA
0016	00004.000	0772814-0001	FASTENER PUSH-ON RECTANGULAR	EA
0018	REF	0959223-9901	SPEC,EQUIPMENT	EA
0019	00001.000	0971579-9701	MANUAL,OPERATOR 732/733 RO 1209-1592-000	EA
0020	REF	0971463-9901	SYSTEM TEST FLOW,700 ASR/KSR/PDT D TERM	EA
0021	00001.000	0959141-0001	PRINTHEAD INTERFACE 1210-9141-183	EA
0022	00001.000	0973230-0001	PANEL BLANK-732/733 R.O. 1209-3230-009	EA
0026	00001.000	0960111-0001	PANEL,BLANK OPTION	EA
0027	00001.000	0960113-0003	PANEL,POWER SWITCH	EA
0028	00001.000	0959137-0002	PRINTER CODE,BAUDOT-U.S.FIGURES 1210-1501-019	EA
0029	00001.000	0959173-0001	BOARD ASSY,TERMINAL CONTROL-KSR 1210-9173-142	EA
0030	00001.000	0959133-0001	BAUDOT TRANSMIT/RECEIVE 1210-9133-018	EA
0031	00001.000	0960944-0001	COVER,POWER MODULE 1209-0944-029	EA
0032	00001.000	0981321-0002	COVER,FAN CONNECTOR,KSR W/O HOLE 1209-1349-015	EA
0033	00003.000	0972988-0030	SCREW 6-32 X .500 PAN HEAD CRES	EA
0034	00006.000	0411101-0058	LOCKWASHER #6 EXTERNAL TOOTH CRES QPL - M-35335-58	EA
0035	00001.000	0960141-0001	LABEL,SERVICE 1209-0141-000	EA
0036	00001.000	0971412-0001	LABEL,PAPER LOADING	EA
0039	00002.000	0539665-0005	FASTENER,3M #3220	EA
0041	00002.000	0539665-0006	FASTENER,PLASTIC,INTLK MULTIPLE HEADS MMM - SJ-310	EA
0042	00001.000	0973231-0001	SWITCH ASSY,PAPER ADVANCE-732/733 R.O. 1209-3231-013	EA
0043	00001.000	0232478-2001	NUT 1/4-40 HEX FOR SWITCH C&K - 71-0 SERIES SW	EA
0044	00001.000	0772828-0001	RING LOCKING W/STD BUSHING .468 DIA C&K - A7-07	EA
0045	00001.000	0236406-0600	WASHER 1/4 INT TOOTH FOR SWITCH C&K - 71-0 SERIES SW	EA
0046	00001.000	0772827-0001	NUT,KNURL FACE .375 OD .062 THK 1/4-40 C&K - A7-28	EA
0047	00002.000	0972988-0013	SCREW 4-40 X .250 PAN HEAD CRES	EA
0048	00002.000	0411027-0803	WASHER .125 X .250 X .022 FLAT CRES QPL - M-15795-803	EA
0049	00002.000	0418431-0024	LOCKWASHER # 4 SPLIT,HELICAL CRES QPL - N-S1676-C4	EA
0050	00001.000	0972368-0001	LABEL,TERMINAL CONFIGURATION SEE - T- DRAWING	EA
0051	AR	0232208-3500	LABEL WIRE MARKER DATABS VINYL CLOTH 1286-2208-000	SH
0052	00001.000	0960105-0001	COVER,PRINTER (INJECTION MOLDING)	EA
0053	00002.000	0972990-0025	SCREW 6-32 X .375 FLT HEAD CRES	EA

MAY 13, 1977 L I S T O F M A T E R I A L

PART NUMBER	REV	DESCRIPTION.....
0973946-0001	B	TERMINAL ASSY,MODEL 732 RECEIVE ONLY

ITEM.	QUANTITY.	COMPONENT..	DESCRIPTION.....	UM	IN
0054	REF	0981305-9901	700 ASR/KSR CONFIG SPECIFICATION	EA	
0055	00002.000	0411100-0071	LOCKWASHER #6 INTERNAL TOOTH CRES QPL - M-35333-71	EA	
0057	00001.000	0213714-0008	PAPER,HEAT PRINTING,WHT 8.54WX300 FT.RL.	RL	
0088	00001.000	0969609-0002	IDENTIFICATION KIT,115VAC NON-UL APPROVE	EA	
0089	00001.000	0999457-9701	MANUAL,FIELD SERVICE FLYER 1209-9457-000	EA	
0090	00001.000	0999456-9701	MANUAL,INFORMATION REQUEST FORM 1209-9456-000	EA	

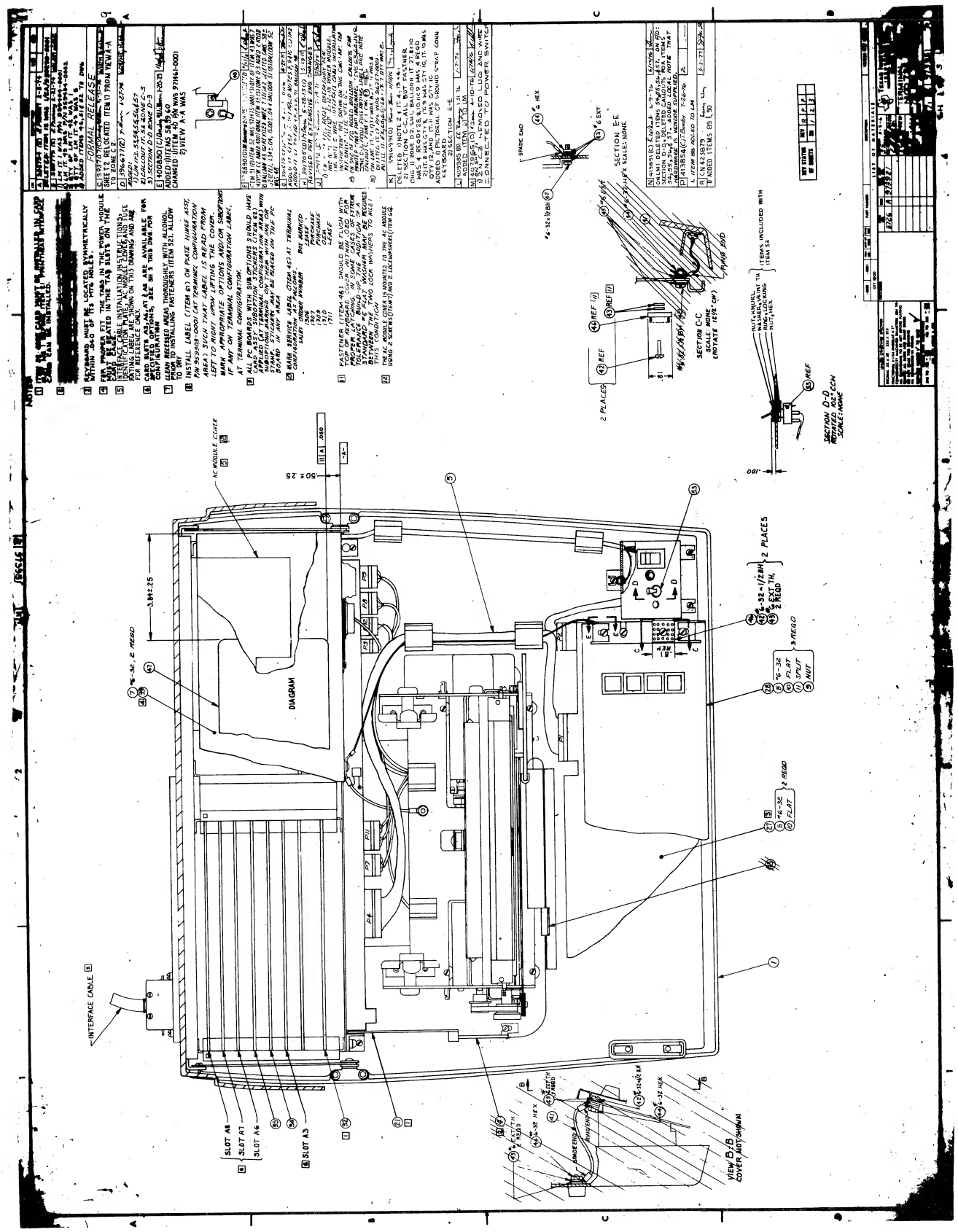
FORMAL RELEASE
DIAGRAM
INTERFACE CABLE
SLOT A8
SLOT A7
SLOT A6
SLOT A3
AC MODULE COVER
SECTION C-C
SECTION E-E
SECTION D-D
VIEW B-B
COVER NOT SHOWN
2 PLACES
3 REQD
2 REQD
SPADE END
RING END

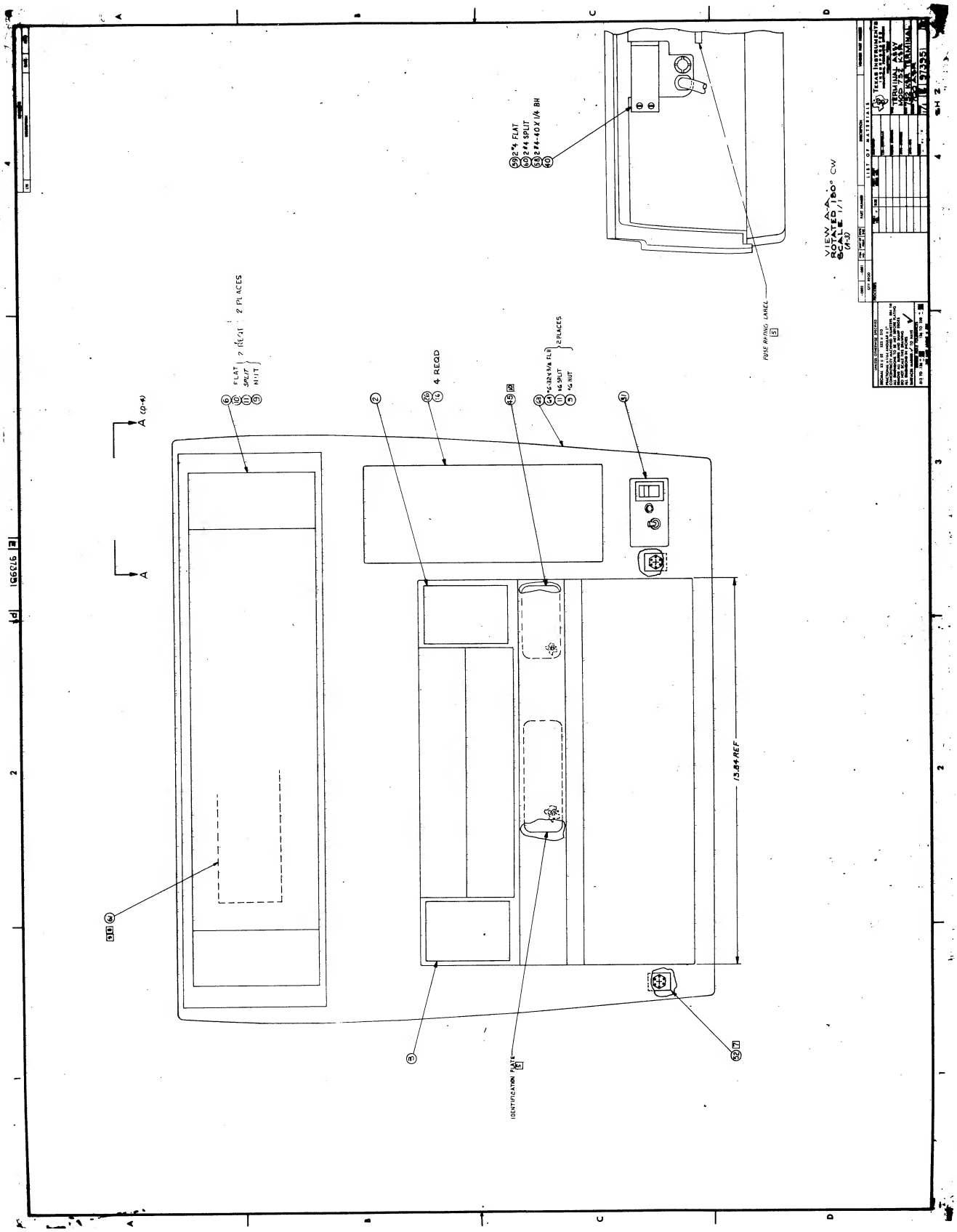
VIEW A-A
ROTATED 180° CW
SCALE 1/1
FUSE RATING LABEL
13.84 REF
4 REQD
2 PLACES
IDENTIFICATION PLATE

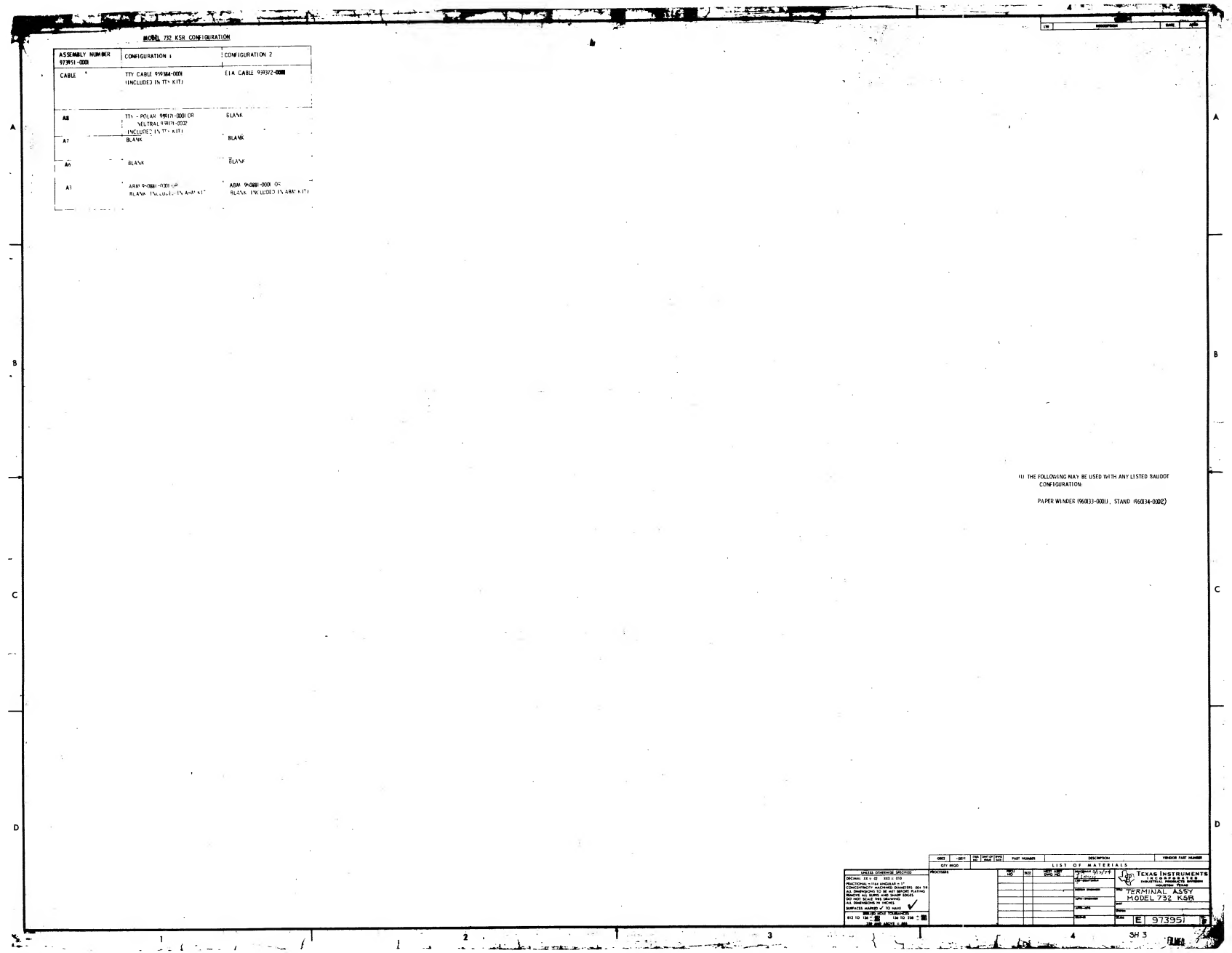

MODEL 732 KSR CONFIGURATION

ASSEMBLY NUMBER 973951-0001	CONFIGURATION 1	CONFIGURATION 2
CABLE	TTY CABLE 959384-0001 (INCLUDED IN TTY KIT)	EIA CABLE 959372-0001
A8	TTY - POLAR 99017-0001 OR NEUTRAL 99171-0002 (INCLUDED IN TTY KIT)	BLANK
A7	BLANK	BLANK
A6	BLANK	BLANK
A1	ABM 9-0881-0001 OR BLANK (INCLUDED IN ABM KIT)	ABM 9-0881-0001 OR BLANK (INCLUDED IN ABM KIT)

(1) THE FOLLOWING MAY BE USED WITH ANY LISTED BAUDOT CONFIGURATION:

PAPER WINDER (960133-0001), STAND (960134-0002)

LIST OF MATERIALS

TEXAS INSTRUMENTS

TERMINAL ASSY MODEL 732 KSR

E 973951

SH 3

PART NUMBER	REV	DESCRIPTION
0973951-0001	R	TERMINAL ASSY,MODEL 732 KSR

ITEM.	QUANTITY.	COMPONENT..	DESCRIPTION	UM
0001	00001.000	0959404-0002	PRINTER ASSY,COMMON (10A) 1209-1506-709	EA
0002	00001.000	0960110-0001	NAMEPLATE,BLANK 1209-0110-010	EA
0003	00001.000	0960110-0002	NAMEPLATE,SILENT 700 1209-1030-006	EA
0005	00001.000	0959370-0001	CABLE ASSY,KEYBOARD 1209-9370-116	EA
0006	00002.000	0960108-0001	PLATE,DRESS KSR 1209-0108-034	EA
0007	00004.000	0972988-0027	SCREW 6-32 X .312 PAN HEAD CRES	EA
0008	00005.000	0972988-0028	SCREW 6-32 X .375 PAN HEAD CRES	EA
0009	00005.000	0411115-0064	NUT,PLAIN 6-32 UNC-2B HEX CRES QPL - M-35649-264	EA
0010	00009.000	0416622-0013	WASHER #6 FLAT QPL - A-960C6L	EA
0011	00005.000	0411104-0136	WASHER #6 LOCKSPLIT QPL - M-35338-136	EA
0016	00004.000	0772814-0001	FASTENER PUSH-ON RECTANGULAR	EA
0018	REF	0959223-9901	SPEC,EQUIPMENT	EA
0019	00001.000	0959228-9701	MANUAL,OPERATOR (BAUDOT) 1209-9228-000	EA
0020	REF	0971463-9901	SYSTEM TEST FLOW,700 ASR/KSR/PDT D TERM	EA
0021	00001.000	0959141-0001	PRINTHEAD INTERFACE 1210-9141-193	EA
0026	00001.000	0960111-0001	PANEL,BLANK OPTION	EA
0027	00001.000	0959325-0001	KEYBOARD,BAUDOT	EA
0028	00001.000	0960921-0001	COVER,KEYBOARD-BAUDOT 1209-0921-004	EA
0031	00001.000	0960113-0001	PANEL,POWER SWITCH 1209-0113-003	EA
0032	00001.000	0959137-0002	PRINTER CODE,BAUDOT-U.S.FIGURES 1210-1501-019	EA
0034	00001.000	0959173-0001	BOARD ASSY,TERMINAL CONTROL-KSR 1210-9173-150	EA
0035	00001.000	0959133-0001	BALDOT TRANSMIT/RECEIVE 1210-9133-019	EA
0039	00001.000	0960944-0001	COVER,POWER MODULE 1209-0944-032	EA
0040	00001.000	0981321-0002	COVER,FAN CONNECTOR,KSR W/O HOLE 1209-1349-017	EA
0042	00003.000	0972988-0030	SCREW 6-32 X .500 PAN HEAD CRES	EA
0043	00005.000	0411101-0058	LOCKWASHER #6 EXTERNAL TOOTH CRES QPL - M-35335-58	EA
0044	00002.000	0416453-0022	NUT,PLAIN 6-32 UNC-2B HEX CRES,SMALL QPL - N-S671C6	EA
0045	00001.000	0960141-0001	LABEL,SERVICE 1209-0141-000	EA
0046	00002.000	0539665-0005	FASTENER,3M #3220	EA
0047	00001.000	0971412-0001	LABEL,PAPER LOADING	EA
0049	00000.000	0959404-0001	PRINTER ASSY,COMMON (10A) 1209-9404-085	EA
0049A			THIS ITEM IS AN ALTERNATE F 1209-1506-709	
0049B			ITEM 1 1209-1506-709	
0052	00002.000	0539665-0006	FASTENER,PLASTIC,INTLK MULTIPLE HEADS MMM - SJ-310	EA
0053	00001.000	0960119-0001	SWITCH ASSY,ON LINE 1209-0119-078	EA
0058	00002.000	0972988-0013	SCREW 4-40 X .250 PAN HEAD CRES	EA
0059	00002.000	0411027-0003	WASHER .125 X .250 X .022 FLAT CRES QPL - M-15795-803	EA
0060	00002.000	0418431-0024	LOCKWASHER # 4 SPLIT,HELICAL CRES QPL - N-S167-04	EA
0061	00001.000	0972369-0001	LABEL,TERMINAL CONFIGURATION SEE - T- DRAWING	EA
0062	AR	02322CE-35CC	LABEL WIRE MARKER DATABS VINYL CLOTH 1286-2208-000	SH

PART NUMBER	REV	DESCRIPTION
0973951-0001	R	TERMINAL ASSY,MODEL 732 KSR

ITEM.	QUANTITY.	COMPONENT..	DESCRIPTION	UM
0063	00001.000	0960105-0001	COVER,PRINTER (INJECTION MOLDING)	EA
0064	00002.000	0972990-0025	SCREW 6-32 X .375 FLT HEAD CRES	EA
0065	REF	0981305-9901	700 ASR/KSR CONFIG SPECIFICATION	EA
0066	00002.000	0411100-0071	LOCKWASHER #6 INTERNAL TOOTH CRES CPL - M-35333-71	EA
0067	00001.000	0213714-0008	PAPER,HEAT PRINTING,WHT 8.54WX300 FT.RL.	RL
0088	00001.000	0969609-0001	IDENTIFICATION KIT,115 VAC-UL APPROVED	EA
0089	00001.000	0999457-9701	MANUAL,FIELD SERVICE FLYER 1209-9457-000	EA
0090	00001.000	0999456-9701	MANUAL,INFORMATION REQUEST FORM 1209-9456-000	EA

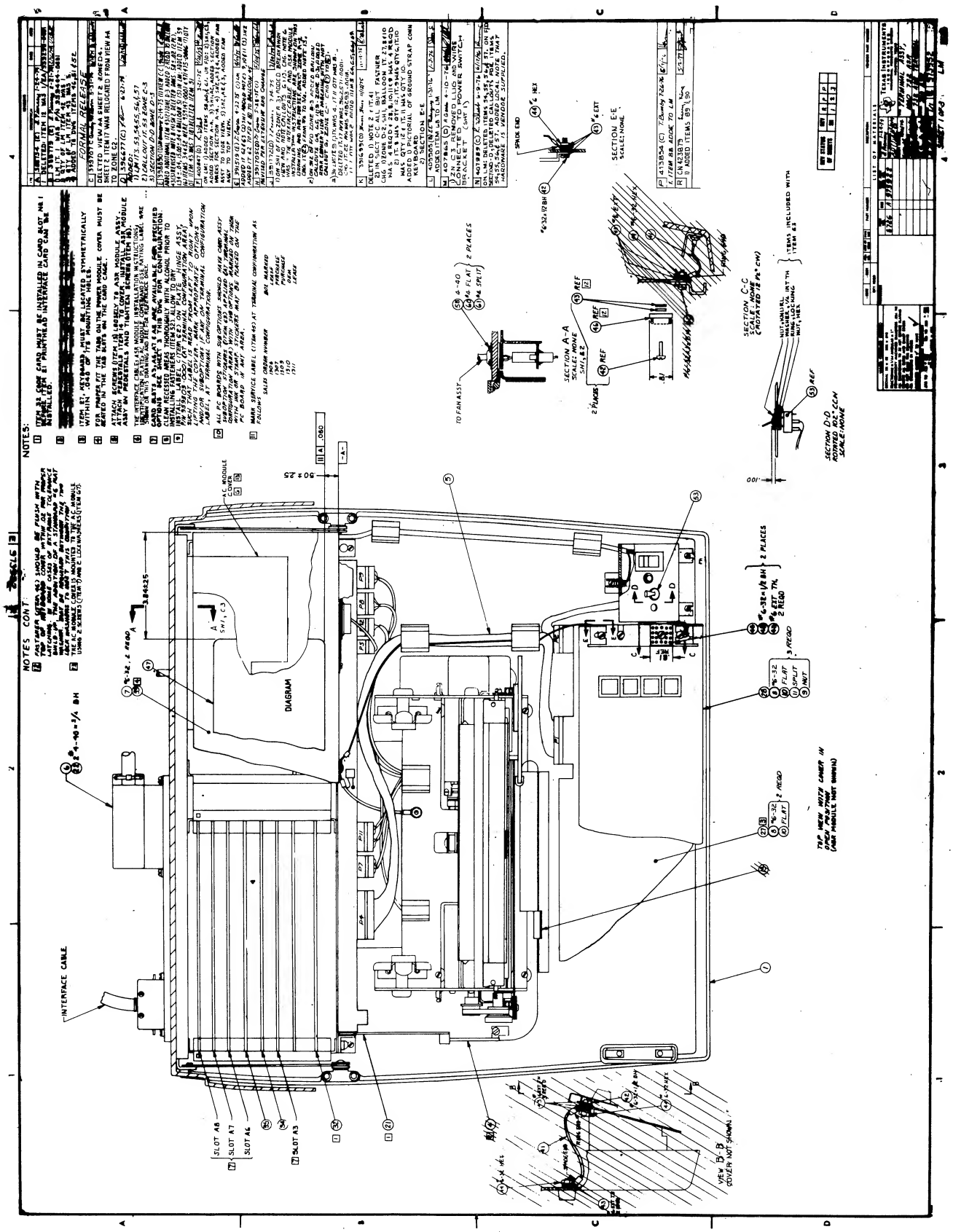
NOTES:
NOTES CONT:
DIAGRAM
INTERFACE CABLE
SECTION A-A
SECTION C-C
SECTION D-D
SECTION E-E
TO FAN ASSY
SPLICE END
VIEW B-B
COVER NOT SHOWN
TAP VIEW WITH COVER IN OPEN POSITION (FOR MODULE NOT SHOWN)
FORMAL RELEASE
TEXAS INSTRUMENTS

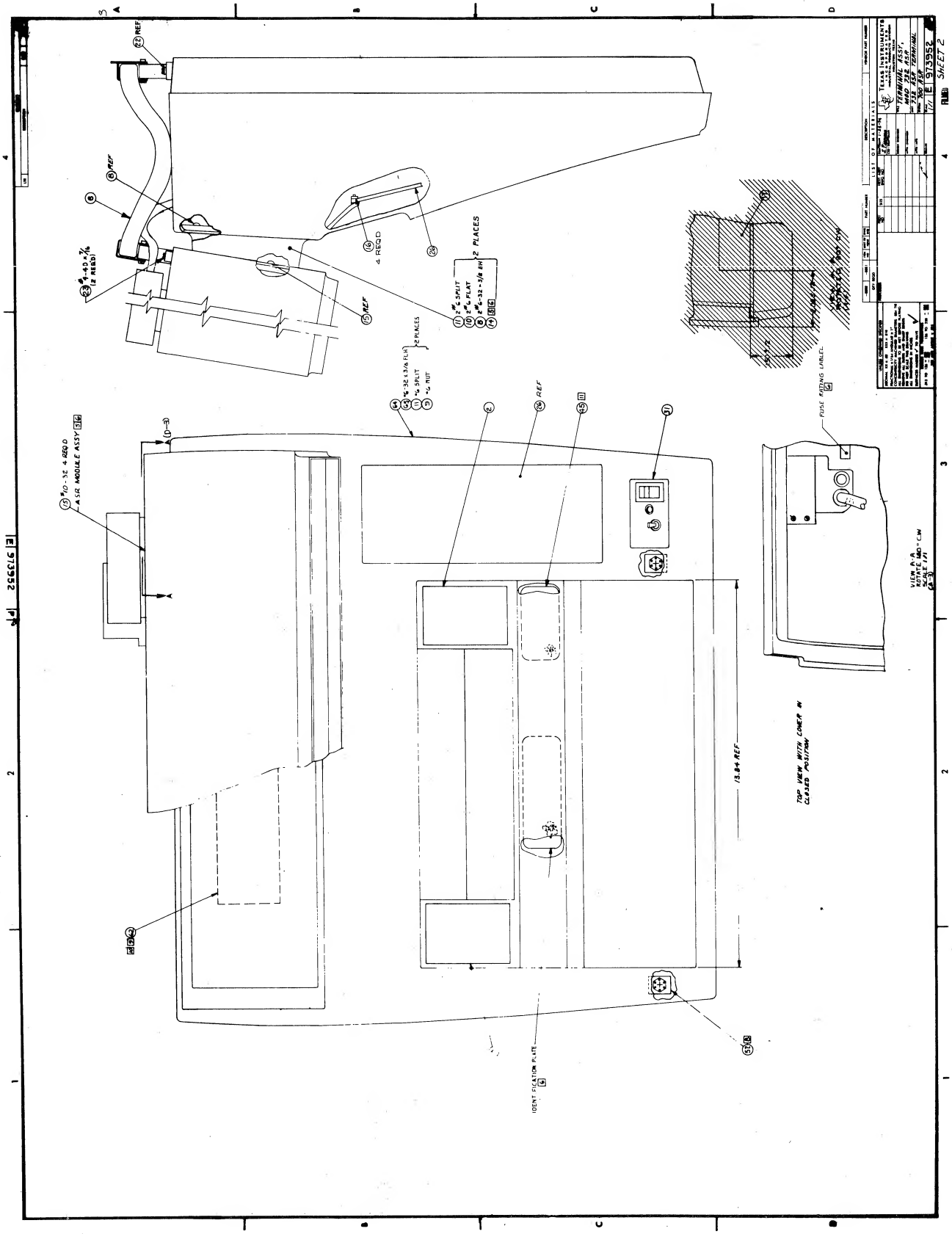

TEXAS INSTRUMENTS
TERMINAL ASSY, MAD 732 ASR
732 ASR TERMINAL
700 ASR
E 973952
SHEET 2
FUSE RATING LABEL
VIEW A-A ROTATE 180° CW SCALE 1/1
TOP VIEW WITH COVER IN CLOSED POSITION
13.84 REF
IDENTIFICATION PLATE
4 REQD
2 PLACES

MODEL 732 ASR CONFIGURATION

ASSEMBLY NUMBER 977972-0001	CONFIGURATION 1	CONFIGURATION 2
CABLE	TTY CABLE 939304-0001 (INCLUDED IN TTY KIT)	EIA CABLE 999572-0001
A 8	TTY - POLAR 99871-0001 OR NEUTRAL 99871-0002 (INCLUDED IN TTY KIT)	BLANK
A 7	BLANK	BLANK
A 6	BLANK	BLANK
A 3	ABM 960881-0001 OR BLANK (INCLUDED IN ABM KIT)	ABM 960881-0001 OR BLANK (INCLUDED IN ABM KIT)

CONFIGURATION NOTES:

(1) THE FOLLOWING MAY BE USED WITH ANY LISTED BAUDOT CONFIGURATION:
PAPER WINDER (960833-0001), STAND (960834-0001)
SINGLE CASSETTE ASR MODULE, BAUDOT (959388-0004), OR DUAL CASSETTE ASR MODULE, BAUDOT (959389-0003).

LIST OF MATERIALS

TEXAS INSTRUMENTS INCORPORATED

TERMINAL ASSY MODEL 732 ASR

MAY 13, 1977 LIST OF MATERIAL

PART NUMBER REV DESCRIPTION.....
0973952-0001 R TERMINAL ASSY MODEL 732 ASR

ITEM.	QUANTITY.	COMPONENT..	DESCRIPTION.....	UM
0001	00001.000	0959404-0002	PRINTER ASSY,COMMON (14A) 1209-1506-706	EA
0002	00001.000	0960110-0001	NAMEPLATE,BLANK 1209-0110-010	EA
0003	00001.000	0960110-0003	NAMEPLATE,SILENT 700 ASR 1209-1031-007	EA
0005	00001.000	0959370-0001	CABLE ASSY,KEYBOARD 1209-9370-112	EA
0006	00001.000	0959371-0001	CABLE ASSY,CASSETTE 1209-9371-080	EA
0007	00004.000	0972988-0027	SCREW 6-32 X .312 PAN HEAD CRES	EA
0008	00009.000	0972988-0028	SCREW 6-32 X .375 PAN HEAD CRES	EA
0009	00005.000	0411115-0064	NUT,PLAIN 6-32 UNC-2B HEX CRES QPL - M-35649-264	EA
0010	00009.000	0416622-0013	WASHER #6 FLAT QPL - A-960C6L	EA
0011	00009.000	0411104-0136	WASHER #6 LOCKSPLIT QPL - M-35338-136	EA
0014	00002.000	0960101-0001	PEDESTAL,MACHINED 1209-0101-034	EA
0015	00004.000	0972986-0008	SCREW 10-32 .375 PAN HEAD CRES	EA
0016	00004.000	0772814-0001	FASTENER PUSH-ON RECTANGULAR	EA
0018	REF	0959222-9901	SPECIFICATION,EQUIPMENT	EA
0019	00001.000	0959228-9701	MANUAL,OPERATOR (BAUDOT) 1209-9228-000	EA
0020	REF	0971463-9901	SYSTEM TEST FLOW,700 ASR/KSR/PDT D TERM	EA
0021	00001.000	0959141-0001	PRINTHEAD INTERFACE 1210-9141-183	EA
0022	00002.000	0972988-0019	SCREW 4-40 X .750 PAN HEAD CRES	EA
0023	00002.000	0972988-0016	SCREW 4-40 X .438 PAN HEAD CRES	EA
0026	00001.000	0960111-0001	PANEL,BLANK OPTION	EA
0027	00001.000	0959325-0001	KEYBOARD,BAUDOT	EA
0028	00001.000	0960921-0001	COVER,KEYBOARD-BAUDOT 1209-0921-004	EA
0031	00001.000	0960113-0001	PANEL,POWER SWITCH 1209-0113-001	EA
0032	00001.000	0959137-0002	PRINTER CODE,BAUDOT-U.S.FIGURES 1210-1501-019	EA
0034	00001.000	0981310-0001	TERMINAL CONTROL,ASR 1210-1310-047	EA
0034A			SEE ITEM 59 FOR ALTERNATE 1210-1310-047	
0035	00001.000	0959133-0001	BAUDOT TRANSMIT/RECEIVE 1210-9133-018	EA
0039	00001.000	0960944-0001	COVER,POWER MODULE 1209-0944-029	EA
0040	00001.000	0971415-0001	CLEANING KIT-CASSETTE TRANSPORT 1205-1415-000	EA
0042	00003.000	0972988-0030	SCREW 6-32 X .500 PAN HEAD CRES	EA
0043	00009.000	0411101-0058	LOCKWASHER #6 EXTERNAL TOOTH CRES QPL - M-35335-58	EA
0044	00002.000	0416453-0022	NUT,PLAIN 6-32 UNC-2B HEX CRES,SMALL QPL - N-S671C6	EA
0045	00001.000	0960141-0001	LABEL,SERVICE 1209-0141-000	EA
0046	00002.000	0539665-0005	FASTENER,3M #3220	EA
0047	00001.000	0971412-0001	LABEL,PAPER LOADING	EA
0048	00001.000	0959230-9701	732/733 ASR QUICK REFERENCE CARD 1209-9230-000	EA
0049	00000.000	0959404-0001	PRINTER ASSY,COMMON (10A) 1209-9404-085	EA
0049A			THIS ITEM IS AN ALTERNATE 1209-9404-085	
0049B			FOR ITEM 1 1209-9404-085	
0052	00002.000	0539665-0006	FASTENER,PLASTIC,INTLK MULTIPLE HEADS MMM - SJ-310	EA

MAY 13, 1977 LIST OF MATERIAL

PART NUMBER REV DESCRIPTION.....
0973952-0001 R TERMINAL ASSY MODEL 732 ASR

ITEM.	QUANTITY.	COMPONENT..	DESCRIPTION.....	UM
0053	00001.000	0960119-0001	SWITCH ASSY,ON LINE 1209-0119-075	EA
0058	00002.000	0972988-0013	SCREW 4-40 X .250 PAN HEAD CRES	EA
0059	00000.000	0959147-0001	TERMINAL CONTROL,ASR 1210-9147-064	EA
0059A			MAY BE USED AS AN ALT FOR 1210-9147-064	
0059B			ITEM 34 1210-9147-064	
0060	00002.000	0411027-0803	WASHER .125 X .250 X .022 FLAT CRES QPL - M-15795-803	EA
0061	00002.000	0418431-0024	LOCKWASHER # 4 SPLIT,HELICAL CRES QPL - N-S1676-C4	EA
0062	00001.000	0972368-0001	LABEL,TERMINAL CONFIGURATION SEE - T- DRAWING	EA
0063	AR	0232208-3500	LABEL WIRE MARKER DATABS VINYL CLOTH 1286-2208-000	SH
0064	00001.000	0960105-0001	COVER,PRINTER (INJECTION MOLDING)	EA
0065	00002.000	0972990-0025	SCREW 6-32 X .375 FLT HEAD CRES	EA
0066	REF	0981305-9901	700 ASR/KSR CONFIG SPECIFICATION	EA
0067	00002.000	0411100-0071	LOCKWASHER #6 INTERNAL TOOTH CRES QPL - M-35333-71	EA
0068	00001.000	0213714-0008	PAPER,HEAT PRINTING,WHT 8.54WX300 FT.RL.	RL
0088	00001.000	0969609-0001	IDENTIFICATION KIT,115 VAC-UL APPROVED	EA
0089	00001.000	0999457-9701	MANUAL,FIELD SERVICE FLYER 1209-9457-000	EA
0090	00001.000	0999456-9701	MANUAL,INFORMATION REQUEST FORM 1209-9456-000	EA

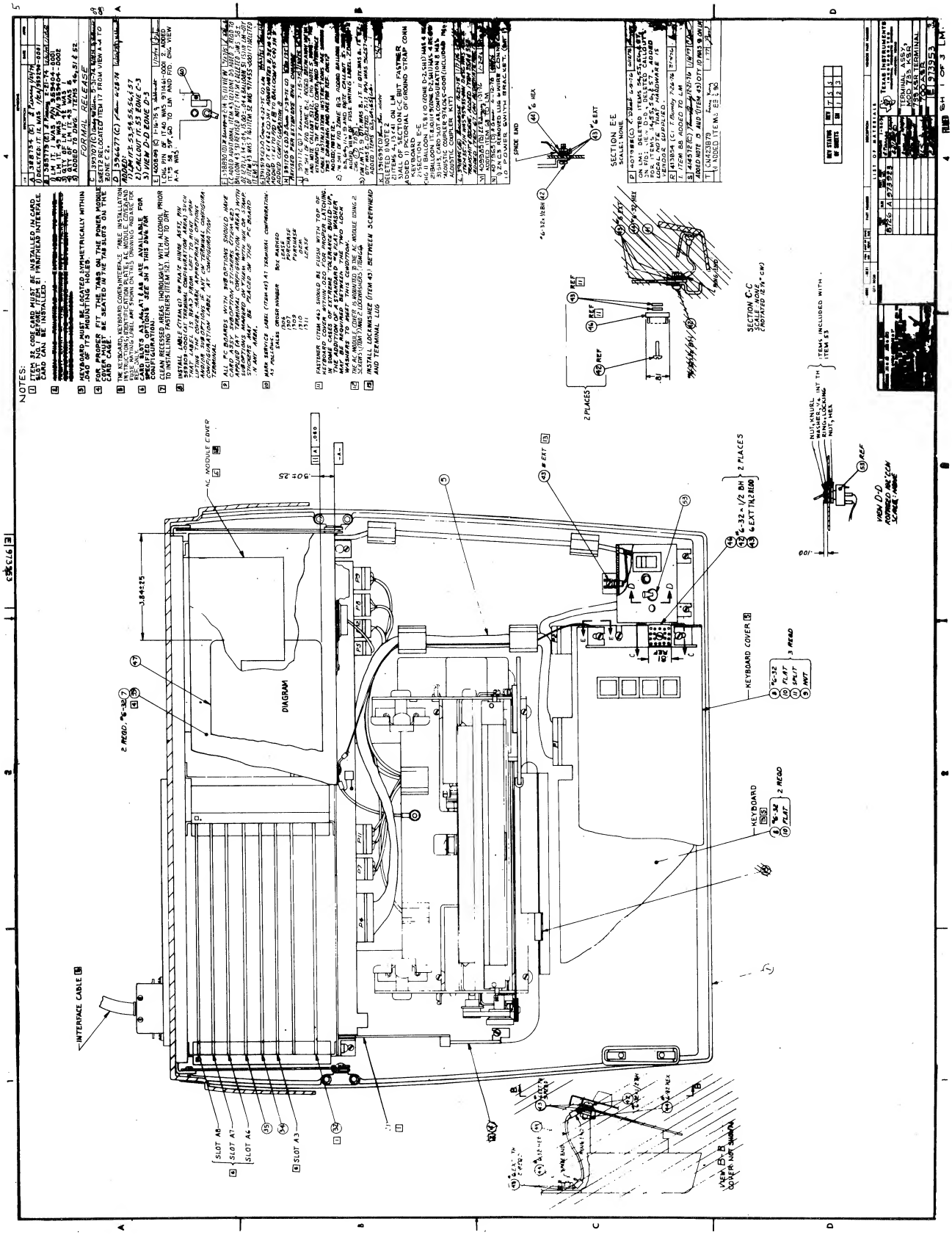

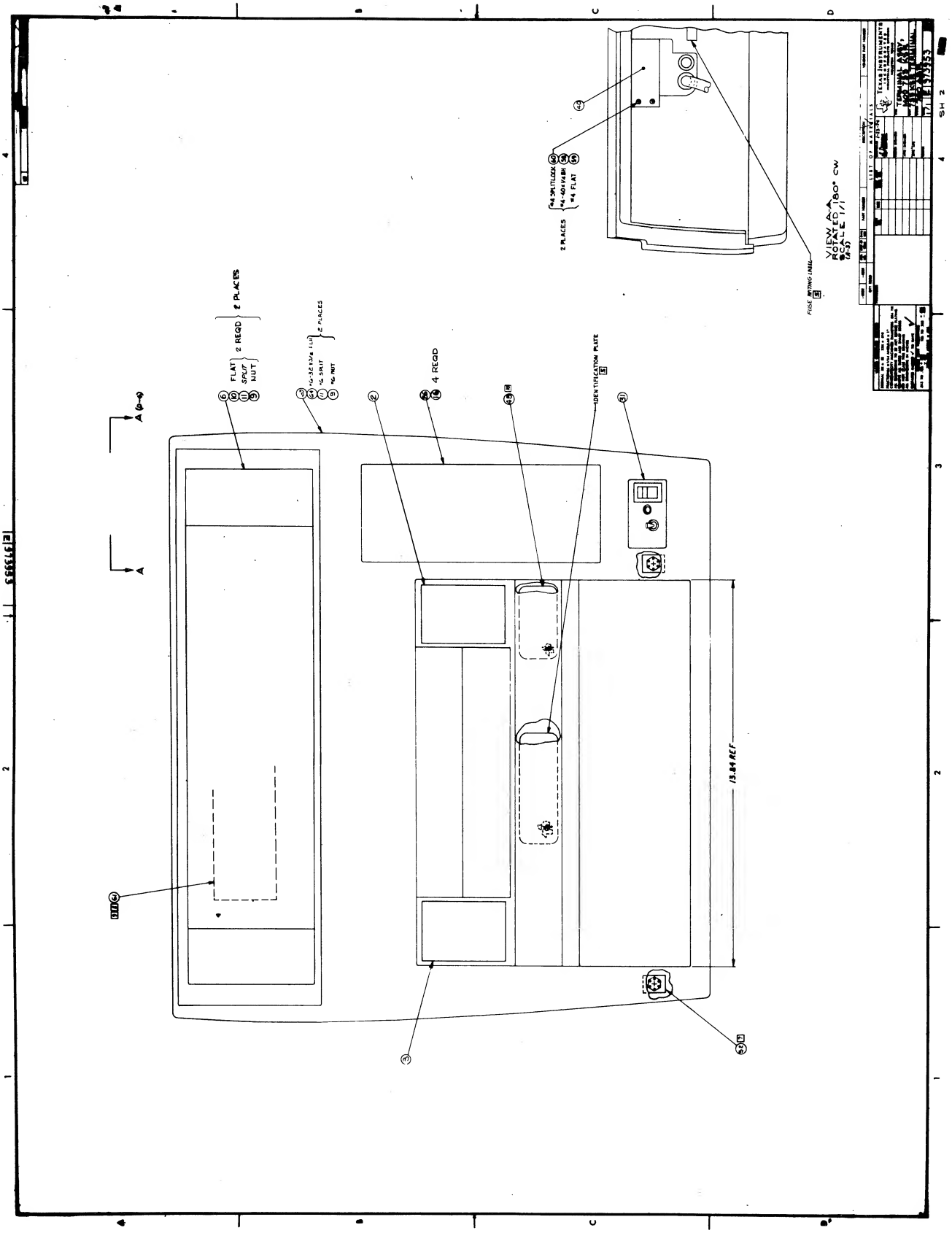

FLAT
SPLIT
NUT
2 REQD
2 PLACES
4 REQD
IDENTIFICATION PLATE
13.84 REF
VIEW A-A
ROTATED 180° CW
SCALE 1/1
FUSE RATING LABEL
2 PLACES
#4 SPLITLOCK
#4 FLAT
TEXAS INSTRUMENTS
SH 2

MODEL 733 CONFIGURATION KSR

ASSEMBLY NUMBER 973959-0001	CONFIGURATION 1	CONFIGURATION 2	CONFIGURATION 3	CONFIGURATION 4	CONFIGURATION 5	CONFIGURATION 6	CONFIGURATION 7	CONFIGURATION 8
CABLE	300 BAUD A/A MODEM 971557-0001 (INCLUDED IN A/A KIT)	300 BAUD A/A EIA 971555-0001 (INCLUDED IN A/A KIT)	300 BAUD A/A MODEM 971557-0001 (INCLUDED IN A/A KIT)	300 BAUD A/A EIA 971555-0001 (INCLUDED IN A/A KIT)	MODEM CABLE 999383-0001 (INCLUDED IN MODEM KIT)	TTY CABLE 999384-0001 (INCLUDED IN TTY KIT)	EIA CABLE 999372-0001 OR 113A CABLE 971558-0001	EIA, TTY CABLE 973859-0001 OR CONNECTION ASSY 973858-0001
A8	MODEM, ANS (ATH) 960887-0003 (INCLUDED IN MODEM KIT)	AUTO ANSWER 960885-0002 PCA (INCLUDED IN A/A KIT	MODEM ANS (ATH) 960887-0003 (INCLUDED IN MODEM KIT)	AUTO ANS. 960885-0004 PCA (INCLUDED IN A/A KIT)	MODEM, 960887-0001 ORIG. (ATL) OR 960887-0003 ANS (ATH) (INCLUDED IN MODEM KIT)	TTY - POLAR 959971-0001 OR NEUTRAL 959971-0002 (INCLUDED IN TTY KIT)	BLANK	[redacted] TI ACOUSTIC COUPLER 976054-0001 OR ALTERNATE 976054-0001★ (INCLUDED IN ACOUSTIC COUPLER KIT)
A7	AUTO ANSWER 960885-0001, PCA (INCLUDED IN A/A KIT)	BLANK	AUTO ANSWER 960885-0005, PCA (INCLUDED IN A/A KIT)	BLANK	BLANK	BLANK	BLANK	BLANK
A6	ADC 971681-0001 OR BLANK (INCLUDED IN ADC KIT)	ADC 971681-0001 OR BLANK (INCLUDED IN ADC KIT)	ADC 971681-0001 OR BLANK (INCLUDED IN ADC KIT)	ADC 971681-0001 OR BLANK (INCLUDED IN ADC KIT)	BLANK	BLANK	BLANK	BLANK
A3	ABM 960881-0001 (INCLUDED IN ABM KIT)	ABM 960881-0001 (INCLUDED IN ABM KIT)	BLANK	BLANK	ABM 960881-0001 OR BLANK (INCLUDED IN ABM KIT)	ABM 960881-0001 OR BLANK (INCLUDED IN ABM KIT)	ABM 960881-0001 OR BLANK (INCLUDED IN ABM KIT)	ABM 960881-0001 OR BLANK (INCLUDED IN ABM KIT)

★ TO BE OBSOLETED

CONFIGURATION NOTES:
(1) THE FOLLOWING MAY BE USED WITH ANY LISTED 300 BAUD CONFIGURATION:
LIMITED ASCII KEY BOARD 959327-0001,
FULL ASCII KEYBOARD 959324-0001,
PAPER WINDER 960833-0001, STAND 960834-0001

LIST OF MATERIALS

TERMINAL ASSY MOD 733 KSR

E 973953

SH 3

MAY 13, 1977 LIST OF MATERIAL

PART NUMBER REV DESCRIPTION.....
0973953-0001 T TERMINAL ASSY MODEL 733 KSR

ITEM.	QUANTITY.	COMPONENT..	DESCRIPTION.....	UM
0001	00001.000	0959404-0002	PRINTER ASSY,COMMON (14A) 1209-1506-706	EA
0002	00001.000	0960110-0001	NAMEPLATE,BLANK 1209-0110-010	EA
0003	00001.000	0960110-0002	NAMEPLATE,SILENT 700 1209-1030-006	EA
0005	00001.000	0959370-0001	CABLE ASSY,KEYBOARD 1209-9370-112	EA
0006	00002.000	0960108-0001	PLATE,DRESS KSR 1209-0108-032	EA
0007	00004.000	0972988-0027	SCREW 6-32 X .312 PAN HEAD CRES	EA
0008	00005.000	0972988-0028	SCREW 6-32 X .375 PAN HEAD CRES	EA
0009	00007.000	0411115-0064	NUT,PLAIN 6-32 UNC-2B HEX CRES QPL - M-35649-264	EA
0010	00009.000	0416622-0013	WASHER #6 FLAT QPL - A-960C6L	EA
0011	00007.000	0411104-0136	WASHER #6 LOCKSPLIT QPL - M-35338-136	EA
0016	00004.000	0772814-0001	FASTENER PUSH-ON RECTANGULAR	EA
0018	REF	0959221-9901	SPEC,EQUIPMENT	EA
0019	00001.000	0959227-9701	MANUAL,733ASR OPERATORS GUIDE 1209-9227-000	EA
0020.	REF	0971463-9901	SYSTEM TEST FLOW,700 ASR/KSR/PDT D TERM	EA
0021	00001.000	0959141-0001	PRINTHEAD INTERFACE 1210-9141-183	EA
0026	00001.000	0960111-0001	PANEL,BLANK OPTION	EA
0031	00001.000	0960113-0001	PANEL,POWER SWITCH 1209-0113-001	EA
0032	00001.000	0959137-0001	PRINTER CODE,ASCII 1210-9137-191	EA
0034	00001.000	0959173-0001	BOARD ASSY,TERMINAL CONTROL-KSR 1210-9173-142	EA
0035	00001.000	0973905-0001	1200 DUAL FORMAT TRANSMIT/RECEIVE 1210-3905-099	EA
0035A			SEE ITEM 50 FOR ALTERNATE 1210-3905-099	
0035B			SEE ITEM 69 FOR ALTERNATE 1210-3905-099	
0039	00001.000	0960944-0001	COVER,POWER MODULE 1209-0944-029	EA
0040	00001.000	0981321-0002	COVER,FAN CONNECTOR,KSR W/O HOLE 1209-1349-015	EA
0042	00003.000	0972988-0030	SCREW 6-32 X .500 PAN HEAD CRES	EA
0043	00010.000	0411101-0058	LOCKWASHER #6 EXTERNAL TOOTH CRES QPL - M-35335-58	EA
0044	00002.000	0416453-0022	NUT,PLAIN 6-32 UNC-2B HEX CRES,SMALL QPL - N-S671C6	EA
0045	00001.000	0960141-0001	LABEL,SERVICE 1209-0141-000	EA
0046	00002.000	0539665-0005	FASTENER,3M #3220	EA
0047	00001.000	0971412-0001	LABEL,PAPER LOADING	EA
0049	00000.000	0959404-0001	PRINTER ASSY,COMMON (10A) 1209-9404-085	EA
0049A			THIS ITEM IS AN ALTERNATE 1209-9404-085	
0049B			FOR ITEM 1 1209-9404-085	
0050	00000.000	0969455-0001	ASCII TRANSMIT/RECEIVE,DUAL FORMAT 1210-9455-000	EA
0050A			THIS ITEM IS AN ALTERNATE 1210-9455-000	
0050B			FOR ITEM 35 1210-9455-000	
0052	00002.000	0539665-0006	FASTENER,PLASTIC,INTLK MULTIPLE HEADS MMM - SJ-310	EA
0053	00001.000	0960119-0001	SWITCH ASSY,ON LINE 1209-0119-075	EA
0058	00002.000	0972988-0013	SCREW 4-40 X .250 PAN HEAD CRES	EA
0059	00002.000	0411027-0803	WASHER .125 X .250 X .022 FLAT CRES QPL - M-15795-803	EA

MAY 13, 1977 L I S T O F M A T E R I A L

PART NUMBER REV DESCRIPTION.....
0973953-0001 T TERMINAL ASSY MODEL 733 KSR

ITEM.	QUANTITY.	COMPONENT..	DESCRIPTION.....	UM
0060	00002.000	0418431-0024	LOCKWASHER # 4 SPLIT,HELICAL CRES QPL - N-S1676-C4	EA
0061	00001.000	0972368-0001	LABEL,TERMINAL CONFIGURATION SEE - T- DRAWING	EA
0062	AR	0232208-3500	LABEL WIRE MARKER DATABS VINYL CLOTH 1286-2208-000	SH
0063	00001.000	0960105-0001	COVER,PRINTER (INJECTION MOLDING)	EA
0064	00002.000	0972990-0025	SCREW 6-32 X .375 FLT HEAD CRES	EA
0065	REF	0981305-9901	700 ASR/KSR CONFIG SPECIFICATION	EA
0066	00002.000	0411100-0071	LOCKWASHER #6 INTERNAL TOOTH CRES QPL - M-35333-71	EA
0067	00000.000	0959135-0001	ASCII TRANSMIT AND RECEIVE 1210-9135-082	EA
0067A			THIS ITEM IS AN ALTERNATE 1210-9135-082	
0067B			FOR ITEM 35 1210-9135-082	
0068	00001.000	0213714-0008	PAPER,HEAT PRINTING,WHT 8.54WX300 FT.RL.	RL
0088	00001.000	0969609-0001	IDENTIFICATION KIT,115 VAC-UL APPROVED	EA
0089	00001.000	0999457-9701	MANUAL,FIELD SERVICE FLYER 1209-9457-000	EA
0090	00001.000	0999456-9701	MANUAL,INFORMATION REQUEST FORM 1209-9456-000	EA

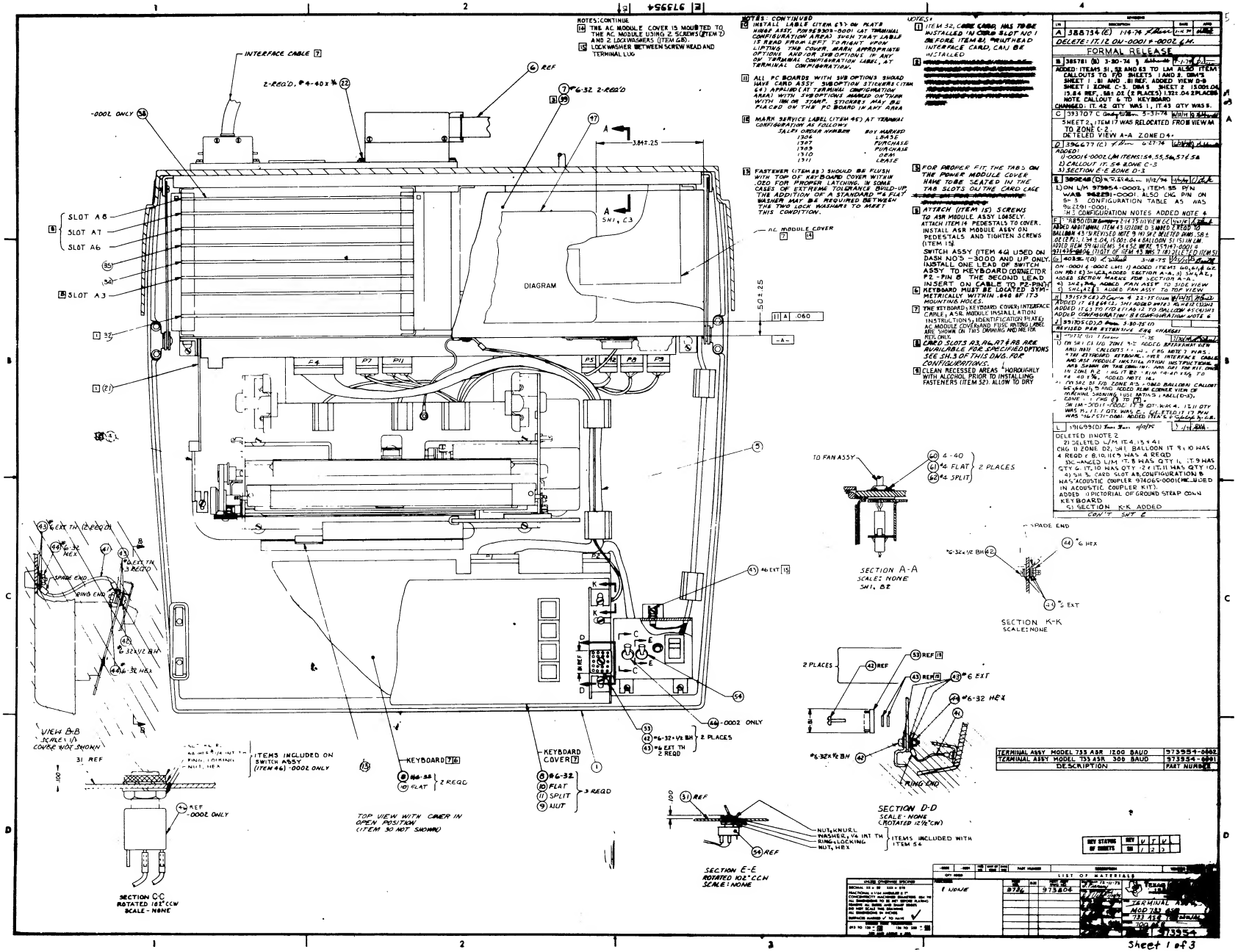

NOTES: CONTINUE

14. THE AC MODULE COVER IS MOUNTED TO THE AC MODULE USING 2 SCREWS (ITEM 7) AND 2 LOCKWASHERS (ITEM 68).
15. LOCKWASHER BETWEEN SCREW HEAD AND TERMINAL LUG

NOTES: CONTINUED

12. INSTALL LABLE (ITEM 69) ON PLATE HINGE ASSY, FOR 953303-0001 AT TERMINAL CONFIGURATION AREA) SUCH THAT LABLE IS READ FROM LEFT TO RIGHT UPON LIFTING THE COVER. MARK APPROPRIATE OPTIONS AND/OR SUB OPTIONS IF ANY ON TERMINAL CONFIGURATION LABEL, AT TERMINAL CONFIGURATION.
11. ALL PC BOARDS WITH SUB OPTIONS SHOULD HAVE CARD ASSY SUBOPTION STICKERS (ITEM 69) APPLIED AT TERMINAL CONFIGURATION AREA) WITH SUBOPTIONS MARKED ON THEM WITH INK OR STAMP. STICKERS MAY BE PLACED ON THE PC BOARD IN ANY AREA
10. MARK SERVICE LABEL (ITEM 45) AT TERMINAL CONFIGURATION AS FOLLOWS

SALES ORDER NUMBER	BOX MARKED
1306	LEASE
1307	PURCHASE
1309	PURCHASE
1310	LEASE
1311	LEASE

9. FASTENER (ITEM 68) SHOULD BE FLUSH WITH TOP OF KEYBOARD COVER WITHIN .020 FOR PROPER LATCHING. IN SOME CASES OF EXTREME TOLERANCE BUILD-UP THE ADDITION OF A STANDARD #6 FLAT WASHER MAY BE REQUIRED BETWEEN THE TWO LOCK WASHERS TO MEET THIS CONDITION.

NOTES:

1. ITEM 32, CORE CARD, HAS TO BE INSTALLED IN CARD SLOT NO 1 BEFORE ITEM 81, MULTIHEAD INTERFACE CARD, CAN BE INSTALLED
2. [redacted]
3. FOR PROPER FIT, THE TABS ON THE POWER MODULE COVER HAVE TO BE SEATED IN THE TAB SLOTS ON THE CARD CAGE
4. ATTACH (ITEM 15) SCREWS TO ASR MODULE ASSY LOOSELY. ATTACH ITEM 14 PEDESTALS TO COVER. INSTALL ASR MODULE ASSY ON PEDESTALS AND TIGHTEN SCREWS (ITEM 15)

   SWITCH ASSY (ITEM 46) USED ON DASH NO'S -3000 AND UP ONLY. INSTALL ONE LEAD OF SWITCH ASSY TO KEYBOARD CONNECTOR P2, PIN 8 THE SECOND LEAD INSERT ON CABLE TO P2-PIN 7
6. KEYBOARD MUST BE LOCATED SYMMETRICALLY WITHIN .040 OF 13 MOUNTING HOLES.
7. THE KEYBOARD, KEYBOARD COVER, INTERFACE CABLE, ASR MODULE INSTALLATION INSTRUCTIONS, IDENTIFICATION PLATE, AC MODULE COVER AND FUSE RATING LABEL ARE SHOWN ON THIS DRAWING AND NOT AS REQ'D.
8. CARD SLOTS A3, A6, A7 & A8 ARE AVAILABLE FOR SPECIFIED OPTIONS SEE SH. 3 OF THIS DWG. FOR CONFIGURATIONS.
9. CLEAN RECESSED AREAS THOROUGHLY WITH ALCOHOL PRIOR TO INSTALLING FASTENERS (ITEM 32). ALLOW TO DRY

LTR	DESCRIPTION	DATE	APPD
A	388734 (E) 1-14-76 DELETE: IT. 12 LW-0001 + -0002 LM. FORMAL RELEASE	1-14-76	
B	389781 (D) 3-30-76 ADDED: ITEMS 51, 52 AND 53 TO LM ALSO ITEM CALLOUTS TO F/O SHEETS 1 AND 3. DIM'S SHEET 1, B1 AND B1 REF. ADDED VIEW D-D SHEET 1, ZONE C-3, DIM 5 SHEET 2 15.001.04, 15.8.6 REF., 581.08 (2 PLACES) 1.322.04 2 PLACES NOTE CALLOUT 6 TO KEYBOARD CHANGED: IT. 42 QTY WAS 1, IT. 43 QTY WAS 5.	3-30-76	
C	393707 C 5-31-76 WITH 10 SHEETS		
	SHEET 2, ITEM 17 WAS RELOCATED FROM VIEW M TO ZONE C-2. DELETED VIEW A-A ZONE D-4		
D	396677 (C) 6-27-76 ADDED: 1) -0001 & -0002 LM ITEMS: 54, 55, 56, 57 & 58 2) CALLOUT IT. 54 ZONE C-3 3) SECTION E-E ZONE D-3		
E	399248 (D) 11-12-76 1) ON LM 973954-0002, ITEM 85 P/N WAS 942251-0001 ALSO DWG P/N ON SH 3 CONFIGURATION TABLE AS WAS 942251-0001 IN 5 CONFIGURATION NOTES ADDED NOTE 4		
F	8850 (D) 2-14-75 (1) VIEW CC ADDED ADDITIONAL ITEM 43 (ZONE D 3) MOVED ITEM 10 BALLOON 43 (A REVISED NOTE 9 (4) (2) DELETED DIM. 58.1 DELETE: 1.341.04, 15.002.04 BALLOON 51 (5) IN LM. ADDED ITEM 54 (4) ITEMS 34 & 55 WERE 973947-0001 & 971415-0006 (7) QTY OF ITEM 45 WAS 7 (8) DELETED ITEM 54		
G	4033 (D) 3-18-75 ON -0001 & -0002 LMS: 1) ADDED ITEMS 60, 61 & 62 ON PAGE 2) SHEET 1, ADDED SECTION A-A, 3) SHEET 2, ADDED SECTION MARKS FOR SECTION A-A 4) SHEET 3, ADDED FAN ASSY TO SIDE VIEW 5) SHEET 4, ADDED FAN ASSY TO TOP VIEW		
H	391579 (C) 2-27-76 ADDED IT. 43 & 44 (2 ZONE D 3) ADDED IT. 45 & 46 (2 ZONE D 4) ADDED 1.T. 2 TO BALLOON AS CUMS ADDED CONFIGURATION: B1 CONFIGURATION NOTE 6		
J	391705 (D) 3-30-76 REVISED PER ECN 5114 DWG CHANGES		
K	391699 (D) 11-19-76 DELETED 1) NOTE 2 2) DELETED L/M IT. 4, 13 & 41 CHG 1) ZONE D2, SH1 BALLOON IT 9 & 10 WAS 4 REQD & 8, 10, 11 & 9 WAS 4 REQD RECHANGED L/M IT. 8 WAS QTY 1, IT. 9 WAS QTY 6, IT. 10 WAS QTY. 12 & IT. 11 WAS QTY 10. 4) SH 3, CARD SLOT A8, CONFIGURATION 8 WAS "ACOUSTIC COUPLER 974065-0001 (INCLUDED IN ACOUSTIC COUPLER KIT). ADDED 1) PICTORIAL OF GROUND STRAP CONN KEYBOARD 5) SECTION K-K ADDED CONT'T SHT 2		

TERMINAL ASSY MODEL 733 ASR 1200 BAUD	973954-0002
TERMINAL ASSY MODEL 733 ASR 300 BAUD	973954-0001
DESCRIPTION	PART NUMBER

REV STATUS OF SHEETS	REV	U	T	V
	SH	1	2	3

QTY REQD	PART NUMBER	DESCRIPTION
1 WDWE	8774	LIST OF MATERIALS
	973804	

TERMINAL ASSY MODEL 733 ASR 1200 BAUD 973954-0002
MODEL 733 ASR 300 BAUD 973954-0001
700 ASR

973954

Sheet 1 of 3

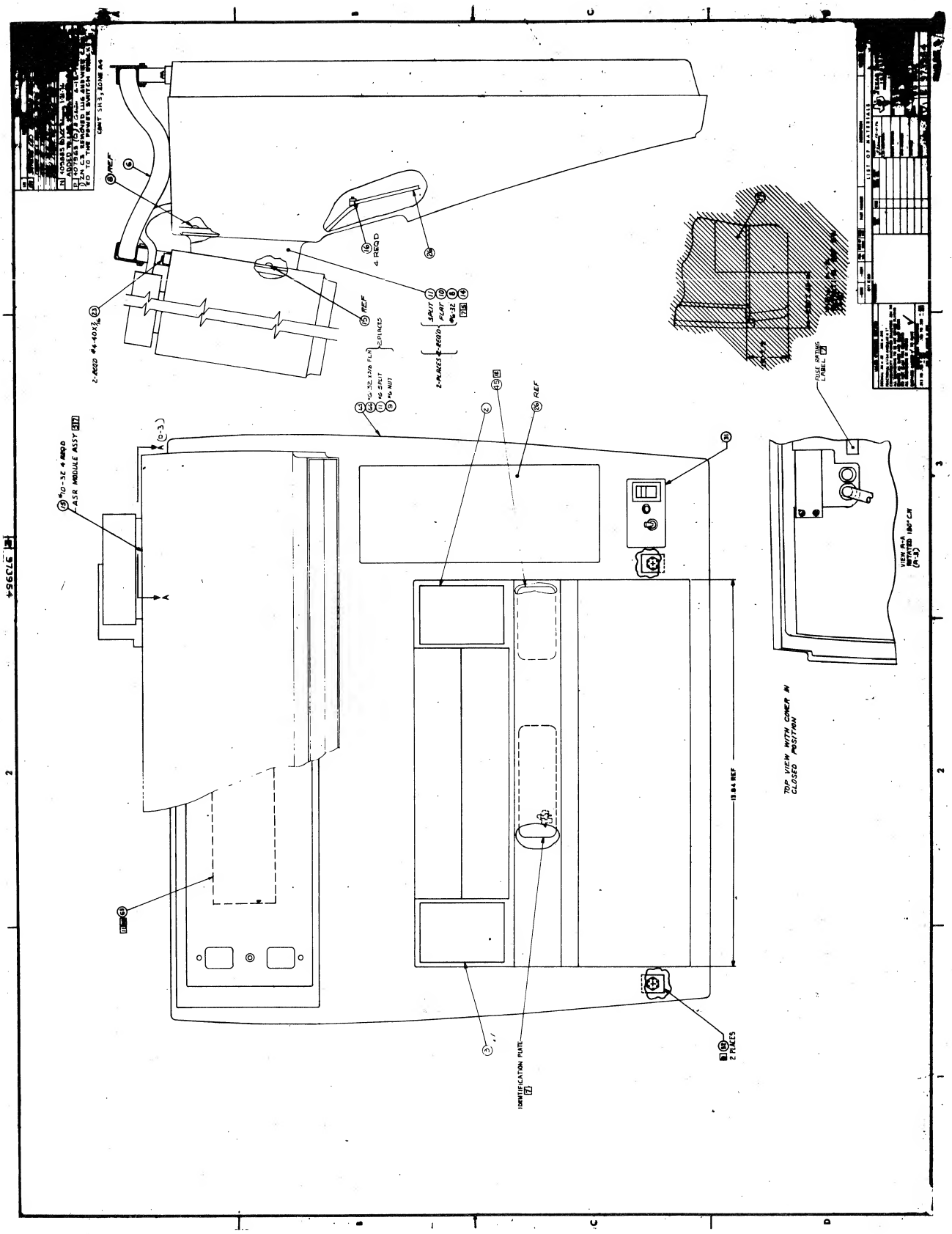

CONT SH 3, ZONE A4
4 REQD
REF
2-REQD #4-40X 7/16
2 PLACES
SPLIT
FLAT
#6-32
#6 SPLIT
#6 NUT
#10-32 4 REQD
ASR MODULE ASSY
FUSE RATING LABEL
VIEW A-A ROTATED 180° CW (A-3)
TOP VIEW WITH COVER IN CLOSED POSITION
13.84 REF
IDENTIFICATION PLATE
2 PLACES
LIST OF MATERIALS

[illegible]	CONFIGURATION 1	CONFIGURATION 2	CONFIGURATION 3	CONFIGURATION 4	CONFIGURATION 5	CONFIGURATION 6	CONFIGURATION 7	CONFIGURATION 8
CABLE	300 BAUD A/A MODEM 971537-0001 (INCLUDED IN A/A KIT)	300 BAUD A/A EIA [illegible] (INCLUDED IN A/A KIT)	300 BAUD A/A MODEM [illegible]-0001 (INCLUDED IN A/A KIT)	300 BAUD A/A EIA 971555-0001 (INCLUDED IN A/A KIT)	MODEM CABLE [illegible] (INCLUDED IN MODEM KIT)	TTY CABLE [illegible] (INCLUDED IN TTY KIT)	EIA CABLE [illegible] OR [illegible] CABLE [illegible]	EIA Y-CABLE 973254-0001 OR CONNECTOR ASSY 973258-0001
[illegible]	MODEM, ANS (ATH) [illegible] (INCLUDED IN MODEM KIT(	[illegible]PCA (INCLUDED IN A/A KIT)	MODEM ANS (ATH) [illegible] (INCLUDED IN MODEM KIT)	AUTO ANS. [illegible] PCA (INCLUDED IN A/A KIT)	MODEM, [illegible] ORIGINA. (ATL)OR [illegible] ANS (ATH) [illegible] IN MODEM KIT)	TTY-POLAR [illegible] OR [illegible] (INCLUDED IN TTY KIT)	BLANK	TI ACOUSTIC COUPLER 974054-0001 OR ALTERNATE 974065-0001 ★ (INCLUDED IN ACOUSTIC COUPLER KIT)
A7	AUTO ANSWER [illegible], PCA (INCLUDED IN A/A KIT(	ASC : 971485-[illegible] OR [1] BLANK (INCLUDED IN ASC KIT)	AUTO ANSWER [illegible], PCA (INCLUDED IN A/A KIT(	ASC 971485-[illegible] [1] OR BLANK (INCLUDED IN ASC KIT)	ASC [illegible] [1] OR BLANK (INCLUDED IN ASC KIT)	ASC 971485-[illegible] OR BLANK (INCLUDED IN ASC KIT([1]	ASC 971485-[illegible] OR BLANK [1] (INCLUDED IN ASC KIT)	ASC 971485-0001 OR BLANK [1] (INCLUDED IN ASC KIT)
A6	ADC 97148[illegible] OR RDC 97148[illegible] OR BLANK (INCLUDED IN EITHER ADC OR RDC KIT)	ADC : 97148[illegible] OR RDC 97148[illegible] OR MBAC 97149[illegible] OR [1] BLANK (INCLUDED IN EITHER ADC, RDC OR ASC KIT(	ADC 97148[illegible] OR RDC 97148[illegible] OR BLANK (INCLUDED IN EITHER ADC OR RDC KIT)	ADC 97148[illegible] OR RDC 97148[illegible] OR MBAC 97149[illegible] OR [1] BLANK (INCLUDED IN EITHER ADC, RDC, OR ASC KIT(	ADC 971481-[illegible] OR RDC 971483-[illegible] OR MBAC 97149[illegible] OR [1] BLANK (INCLUDED IN EITHER ADC, RDC OR ASC KIT(	ADC 97148[illegible] OR RDC 971483-[illegible] OR MBAC 97149[illegible] OR [1] BLANK (INCLUDED IN [illegible] ADC, RDC, OR ASC KIT)	ADC 97148[illegible] OR RDC 971483-[illegible] OR MBAC 97149[illegible] OR [1] BLANK (INCLUDED IN EITHER ADC, RDC, OR ASC KIT)	ADC 971481-0001 OR RDC 971483-0002 OR MBAC 971491-0002 [1] OR BLANK (INCLUDED IN EITHER ADC, RDC OR ASC KIT)
[illegible]	ABM 960 881-[illegible] (INCLUDED IN ABM KIT)	ABM [illegible] (INCLUDED IN ABM KIT)	BLANK	BLANK	ABM 960881-[illegible] OR BLANK (INCLUDED IN ABM KIT)	ABM [illegible] OR BLANK (INCLUDED IN ABM KIT)	ABM [illegible] OR BLANK (INCLUDED IN ABM KIT)	ABM 960881-0001 OR BLANK (INCLUDED IN ABM KIT)

★ TO BE OBSOLETED

ASSEMBLY NUMBER 9739[illegible]	CONFIGURATION 1
CABLE	1200 BAUD CABLE 999372-0002
A8	1200 BAUD TRANSMIT 962293-0001
A7	ASC 971483-0001 [1] OR BLANK (INCLUDED IN ASC KIT)
A6	ADC 971481-0002, OR RDC 971483-0003 OR MBAC 971491-0002 [1] OR BLANK (INCLUDED IN ADC, RDC, OR ASC KIT)
A5	1200 BAUD RECEIVER 973907-0001
A3	ABM 960881-0001 OR BLANK ((INCLUDED IN ABM KIT(

REV	DESCRIPTION
R	413852(C) [illegible] 6-9-76 [illegible] -0001 & -0002 [illegible] DELETED ITEMS 55, [illegible], 57, & 58. ON [illegible] SECTION [illegible], DELETED CALLOUTS FOR [illegible] 55, 56, 57, & 58. ADDED LOCAL NOTE THAT HARDWARE IS VENDOR SUPPLIED.
S	413864 (C) [illegible] 7-26-76 ADDED IT. 88 TO -1 & -2 CMS
T	[illegible]573(C) [illegible] 12-21-76 1) ADDED NOTE 6 2) ITEM 43 QTY WAS [illegible] 3) ADDED CALLOUT 43 & 15 IN ZONE C-3
U	CN423879 L. [illegible] 1) ADDED ITEMS 89 & 90 TO -1 & -2

CONFIGURATION NOTES

[1] IF ASC IS IN CONFIGURATION, A6 CANNOT BE BLANK. THE TERMINAL ALSO REQUIRES THE 14 AMPERE POWER SUPPLY P.C. ASSY'S, CONTROL REG. 971450-0001, AND REG. AMP 971443-0001. IF ASC IS NOT IN THE CONFIGURATION, DO NOT USE MBAC (P/N 971491-0002(IN A6.

(2) THE FOLLOWING MAY BE USED WITH ANY LISTED 300 OR 1200 BAUD CONFIGURATION: LIMITED ASCII KEYBOARD (999327-0001(, FULL ASCII KEYBOARD (999326-0001), PAPER WINDER (960330-0001), STAND (960340-[illegible]), SINGLE CASSETTE ASR MODULE, ASCII (999389-0002), OR DUAL CASSETTE ASR MODULE ASCII (999389-0001).

(3) THE FOOT SWITCH ASSEMBLY (973[illegible]) MAY ONLY BE USED WITH THE CONFIGURATIONS WHICH INCLUDE THE RDC (971483-0002 or -0003).

(4) THE BINARY FORMAT ASR MODULE ASSY, BOTH DUAL ([illegible]) AND SINGLE ([illegible]) MAY BE USED IN EITHER THE 300 BAUD OR 1200 BAUD VERSION WHEN EITHER THE DUAL FORMAT ASCII TRANSMIT/RECEIVE (969455-0001, OR 973905-0001, STRAPPED FOR [illegible] 1200 BAUD TRANSMIT (962293-0001, STRAPPED FOR BINARY) IS INSTALLED, RESPECTIVELY.

(5) TOP ACCESS CARD 960160 TO BE USED WITH ALL ASC CONFIGURATIONS.

(6) THE BINARY FORMAT ASR MODULE ASSY, BOTH DUAL (959389-000[illegible]) AND SINGLE (959389-0006) MAY BE USED IN EITHER THE 300 BAUD OR 1200 BAUD VERSION WHEN EITHER THE DUAL FORMAT ASC II TRANSMIT/RECEIVE (969455-0001, OR 973905-[illegible] OR THE 1200 BAUD TRANSMIT (962293-[illegible]) IS INSTALLED RESPECTIVELY, AND STRAPPED FOR BINARY

LIST OF MATERIALS

TEXAS INSTRUMENTS

TERMINAL [illegible]

PART NUMBER	REV	DESCRIPTION
0973954-0001	U	TERMINAL ASSY,MODEL 733 ASR 300 BAUD
0973954-0002	U	TERMINAL ASSY,MODEL 733 ASR 1200 BAUD

ITEM.	QUANTITY.	COMPONENT..	DESCRIPTION.....	UM
0001	00001.000	0959404-0002	PRINTER ASSY,COMMON (14A) 1209-1506-709	EA
0002	00001.000	0960110-0001	NAMEPLATE,BLANK 1209-0110-010	EA
0003	00001.000	0960110-0003	NAMEPLATE,SILENT 700 ASR 1209-1031-007	EA
0005	00001.000	0959370-0001	CABLE ASSY,KEYBOARD 1209-9370-116	EA
0006	00001.000	0959371-0001	CABLE ASSY,CASSETTE 1209-9371-084	EA
0007	00004.000	0972988-0027	SCREW 6-32 X .312 PAN HEAD CRES	EA
0008	00009.000	0972988-0028	SCREW 6-32 X .375 PAN HEAD CRES	EA
0009	00005.000	0411115-0064	NUT,PLAIN 6-32 UNC-2B HEX CRES QPL - M-35649-264	EA
0010	00009.000	0416622-0013	WASHER #6 FLAT QPL - A-960C6L	EA
0011	00009.000	0411104-0136	WASHER #6 LOCKSPLIT QPL - M-35338-136	EA
0014	00002.000	0960101-0001	PEDESTAL,MACHINED 1209-0101-035	EA
0015	00004.000	0972986-0008	SCREW 10-32 .375 PAN HEAD CRES	EA
0016	00004.000	0772814-0001	FASTENER PUSH-ON RECTANGULAR	EA
0018	REF	0959220-9901	SPECIFICATION,EQUIPMENT	EA
0019	00001.000	0959227-9701	MANUAL,733ASR OPERATORS GUIDE 1209-9227-000	EA
0020	REF	0971463-9901	SYSTEM TEST FLOW,700 ASR/KSR/POT D TERM	EA
0021	00001.000	0959141-0001	PRINTHEAD INTERFACE 1210-9141-193	EA
0022	00002.000	0972988-0019	SCREW 4-40 X .750 PAN HEAD CRES	EA
0023	00002.000	0972988-0016	SCREW 4-40 X .438 PAN HEAD CRES	EA
0026	00001.000	0960111-0001	PANEL,BLANK OPTION	EA
0031	00001.000 for-0001	0960113-0001	PANEL,POWER SWITCH 1209-0113-003	EA
0031	00001.000 for-0002	0960113-0002	PANEL,POWER SWITCH	EA
0032	00001.000	0959137-0001	PRINTER CODE,ASCII 1210-9137-201	EA
0034	00001.000 for-0001	0981310-0001	TERMINAL CONTROL,ASR 1210-1310-052	EA
0034	00001.000 for-0002	0981310-0001	TERMINAL CONTROL,ASR 1210-1310-052	EA
0034A			SEE ITEM 59 FOR ALTERNATE 1210-1310-052	
0034A			SEE ITEM 59 FOR ALTERNATE 1210-1310-052	
0035	00001.000 for-0001	0973905-0001	1200 DUAL FORMAT TRANSMIT/RECEIVE 1210-3905-107	EA
0035	00001.000 for-0002	0973907-0001	1200 BAUD RECEIVER 1210-3907-039	EA
0035A			SEE ITEM 50 FOR ALTERNATE 1210-3905-107	
0035B			SEE ITEM 69 FOR ALTERNATE 1210-3905-107	
0038	00001.000 for-0002 only	0962293-0001	1200 BAUD TRANSMIT 1210-2293-066	EA
0039	00001.000	0960944-0001	COVER,POWER MODULE 1209-0944-032	EA
0040	00001.000	0971415-0001	CLEANING KIT-CASSETTE TRANSPORT 1205-1415-000	EA
0042	00003.000	0972988-0030	SCREW 6-32 X .500 PAN HEAD CRES	EA
0043	00010.000	0411101-0058	LOCKWASHER #6 EXTERNAL TOOTH CRES QPL - M-35335-58	EA
0044	00002.000	0416453-0022	NUT,PLAIN 6-32 UNC-2B HEX CRES,SMALL QPL - N-S671C6	EA
0045	00001.000	0960141-0001	LABEL,SERVICE 1209-0141-000	EA
0046	00001.000 for-0002 only	0960120-0001	SWITCH ASSY,SPEED 1209-0120-030	EA
0047	00001.000	0971412-0001	LABEL,PAPER LOADING	EA
0048	00001.000	0959230-9701	732/733 ASR QUICK REFERENCE CARD 1209-9230-000	EA
0049	00000.000	0959404-0001	PRINTER ASSY,COMMON (10A) 1209-9404-085	EA

ITEM.	QUANTITY.	COMPONENT..	DESCRIPTION.....	UM
0049A			THIS ITEM IS AN ALTERNATE 1209-9404-085	
0049B			FOR ITEM 1 WHEN ASC NOT 1209-9404-085	
0049C			INSTALLED 1209-9404-085	
0050	00000.000 for-0001 only	0969455-0001	ASCII TRANSMIT/RECEIVE,DUAL FORMAT 1210-9455-000	EA
0052	00002.000	0539665-0006	FASTENER,PLASTIC,INTLK MULTIPLE HEADS MMM - SJ-310	EA
0050A			THIS ITEM IS AN ALTERNATE 1210-9455-000	
0050B			FOR ITEM 35 1210-9455-000	
0052	00002.000	0539665-0006	FASTENER,PLASTIC,INTLK MULTIPLE HEADS MMM - SJ-310	EA
0053	00002.000	0539665-0005	FASTENER,3M #3220	EA
0054	00001.000	0960119-0001	SWITCH ASSY,ON LINE 1209-0119-078	EA
0059	00000.000	0959147-0001	TERMINAL CONTROL,ASR 1210-9147-064	EA
0059A			MAY BE USED AS AN ALT FOR 1210-9147-064	
0059B			ITEM 34 1210-9147-064	
0060	00002.000	0972988-0013	SCREW 4-40 X .250 PAN HEAD CRES	EA
0061	00002.000	0411027-0803	WASHER .125 X .250 X .022 FLAT CRES QPL - M-15795-803	EA
0062	00002.000	0418431-0024	LOCKWASHER # 4 SPLIT,HELICAL CRES QPL - N-S1676-C4	EA
0063	00001.000	0972368-0001	LABEL,TERMINAL CONFIGURATION SEE - T- DRAWING	EA
0064	AR	0232208-3500	LABEL WIRE MARKER CATABS VINYL CLOTH 1286-2208-000	SH
0065	00001.000	0960105-0001	COVER,PRINTER (INJECTION MOLDING)	EA
0066	00002.000	0972990-0025	SCREW 6-32 X .375 FLT HEAD CRES	EA
0067	REF	0981305-9901	700 ASR/KSR CONFIG SPECIFICATION	EA
0068	00002.000	0411100-0071	LOCKWASHER #6 INTERNAL TOOTH CRES QPL - M-35333-71	EA
0069	00000.000	0959135-0001	ASCII TRANSMIT AND RECEIVE 1210-9135-082	EA
0069A			THIS ITEM IS AN ALTERNATE 1210-9135-082	
0069B			FOR ITEM 35 1210-9135-082	
0070	00001.000	0213714-0008	PAPER,HEAT PRINTING,WHT 8.54WX300 FT.RL.	RL
0068	00001.000	0969609-0001	IDENTIFICATION KIT,115 VAC-UL APPROVED	EA
0089	00001.000	0999457-9701	MANUAL,FIELD SERVICE FLYER 1209-9457-000	EA
0090	00001.000	0999456-9701	MANUAL,INFORMATION REQUEST FORM 1209-9456-000	EA

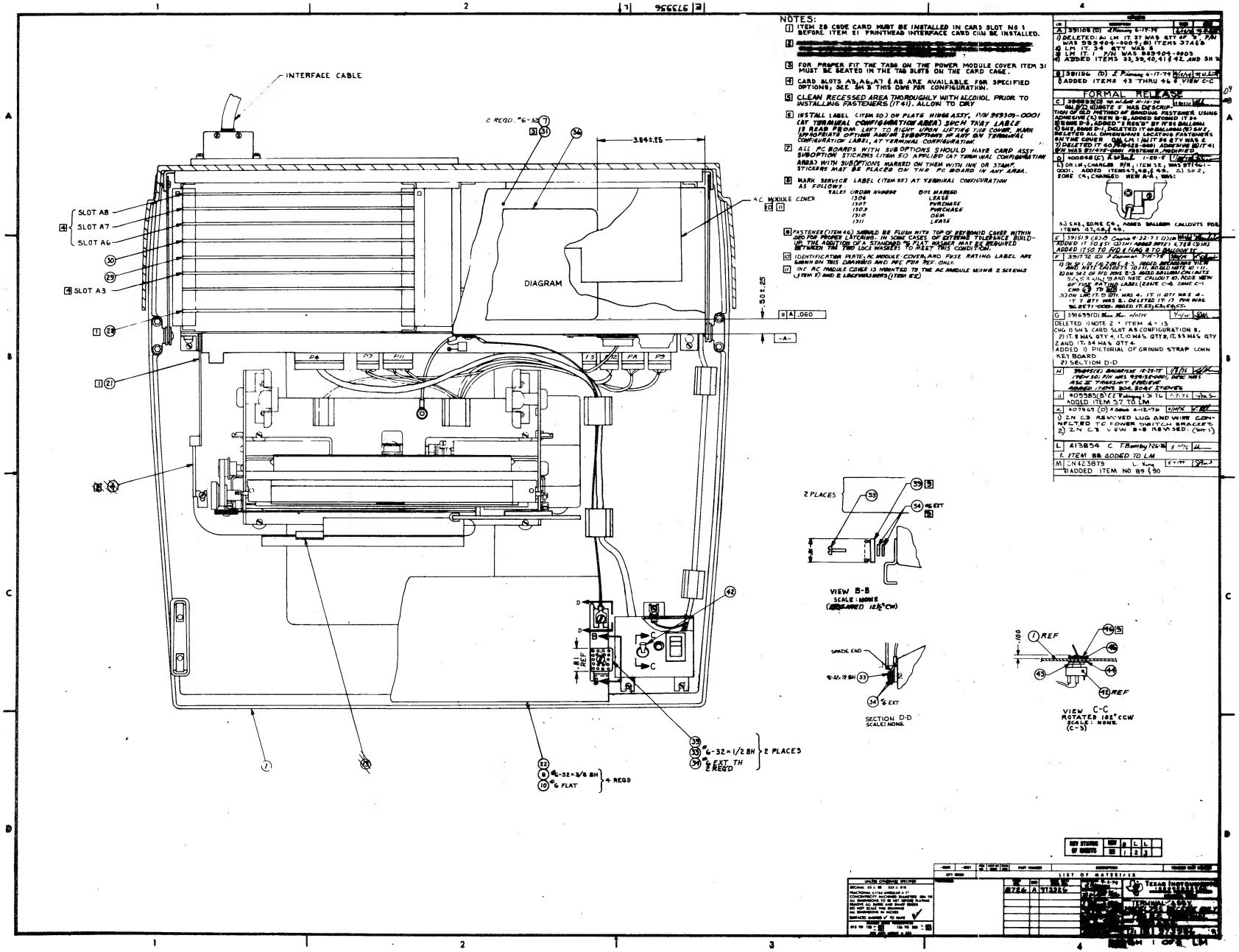

NOTES:

1. ITEM 28 CODE CARD MUST BE INSTALLED IN CARD SLOT NO 1 BEFORE ITEM 21 PRINTHEAD INTERFACE CARD CAN BE INSTALLED.
2. [redacted]
3. FOR PROPER FIT THE TABS ON THE POWER MODULE COVER ITEM 31 MUST BE SEATED IN THE TAB SLOTS ON THE CARD CAGE.
4. CARD SLOTS A5, A6, A7 & A8 ARE AVAILABLE FOR SPECIFIED OPTIONS, SEE SH 2 THIS DWG FOR CONFIGURATION.
5. CLEAN RECESSED AREA THOROUGHLY WITH ALCOHOL PRIOR TO INSTALLING FASTENERS (IT 41). ALLOW TO DRY
6. INSTALL LABEL (ITEM 50) ON PLATE HINGE ASSY, P/N 993909-0001 (AT TERMINAL CONFIGURATION AREA) SUCH THAT LABLE IS READ FROM LEFT TO RIGHT WHEN LIFTING LID COVER. MARK APPROPRIATE OPTIONS AND/OR SUBOPTIONS IF ANY ON TERMINAL CONFIGURATION LABEL, AT TERMINAL CONFIGURATION.
7. ALL PC BOARDS WITH SUBOPTIONS SHOULD HAVE CARD ASSY SUBOPTION STICKERS (ITEM 51) APPLIED (AT TERMINAL CONFIGURATION AREA) WITH SUBOPTIONS MARKED ON THEM WITH INK OR STAMP. STICKERS MAY BE PLACED ON THE PC BOARD IN ANY AREA.
8. MARK SERVICE LABEL (ITEM 52) AT TERMINAL CONFIGURATION AS FOLLOWS

SALES ORDER NUMBER	BOX MARKED
1306	LEASE
1307	PURCHASE
1308	PURCHASE
1310	OEM
1311	LEASE

9. FASTENER (ITEM 46) SHOULD BE FLUSH WITH TOP OF KEYBOARD COVER WITHIN .060 FOR PROPER LATCHING. IN SOME CASES OF EXTREME TOLERANCE BUILD-UP, THE ADDITION OF A STANDARD SS FLAT WASHER MAY BE REQUIRED BETWEEN THE TWO LOCK WASHERS TO MEET THIS CONDITION.
10. IDENTIFICATION PLATE: AC MODULE COVER, AND FUSE RATING LABEL ARE SHOWN ON THIS DRAWING AND ARE FOR REF. ONLY.
11. THE AC MODULE COVER IS MOUNTED TO THE AC MODULE USING 2 SCREWS (ITEM 9) AND 2 LOCKWASHERS (ITEM 22)

LTR	DESCRIPTION	ECO	DWN APVD
A	391108 (D) [illegible] 6-17-74	8/4/74	
	1) DELETED: 6a LM IT 37 WAS QTY OF 4, P/N WAS 993904-0004, 8) ITEMS 37 & 8 6 LM IT 34 QTY WAS 8 6 LM IT 1 P/N WAS 993904-0003 4) ADDED ITEMS 33, 39, 40, 41 & 42, AND SH 3		
B	391186 (D) [illegible] 6-17-74	8/4/74	
	1) ADDED ITEMS 43 THRU 46 & VIEW C-C		
	FORMAL RELEASE		
C	393819 (D) [illegible] 10-10-74	11/8/74	
	1) ITEM 5 WAS DESCRIPTION OF QTY METHOD OF BONDING FASTENER, USING ADHESIVE (5) WAS B-8, ADDED SECOND ITEM. 2) ZONE D-3 ADDED "1.843" BY 90 BALLOON 3) SHT 1 ZONE B-1, DELETED IT 40 BALLOON (8) 84.2, DELETED ALL DIMENSIONS LOCATING FASTENERS ON THE COVER ON LM 1 UNIT 34 & QTY WAS 2. 7) DELETED IT 60 P/N 993428-0001 ADHESIVE (D) IT 41 WAS 871472-0001 FASTENER, MODIFIED.		
D	400848 (G) [illegible] 1-20-75	[illegible]	
	1) ON LM, CHANGED P/N, ITEM 32, WAS 871461-0001. ADDED ITEMS 47, 48, & 49. 2) SH 2, ZONE C4, CHANGED VIEW A-A, WAS: [illegible] 2) SH 2, ZONE C4, ADDED BALLOON CALLOUTS FOR ITEMS 47, 48, & 49.		
E	395159 (G) [illegible] 3-27-75	[illegible]	
	ADDED IT 10 (SH 1) AND ADDED NOTE 4 & 7 (SH 2) ADDED IT 50 TO FIG 4 FLAG & TO BALLOON 32		
F	397172 (D) [illegible] 7-7-75	[illegible]	
	1) ZONE C-4 & ZONE E-3 ADDED ADHESIVE VIEW AND NOTE CALLOUTS TO IT, ADDED NOTE 10, 11, 12 IN ZONE E-3 ADDED BALLOON CAN/NOTE 5, 6, 7, 8, 9 AND NOTE CALLOUT 10. ADDED VIEW OF FUSE RATING LABEL (ZONE C-4, ZONE C-1 CHG [illegible] TO [illegible]. 3) ON UNIT 5 QTY WAS 4, IT 11 QTY WAS 4, IT 7 QTY WAS 2, DELETED IT 17 P/N WAS 96 EXT. CORD. ADDED IT 52, 53, 54, 55.		
G	396699 (D) [illegible] 9-4-75	[illegible]	
	DELETED 1) NOTE 2 & ITEM 4 & 13 CHG 1) SH 3, CARD SLOT A8 CONFIGURATION 8. 2) IT 8 WAS QTY 4, IT 10 WAS QTY 8, IT 33 WAS QTY 2 AND IT 34 WAS QTY 4. ADDED 1) PICTORIAL OF GROUND STRAP CONN KEYBOARD 2) SECTION D-D		
H	398956 (E) [illegible] 12-29-75	[illegible]	
	ITEM 30, P/N WAS 939130-0001, QTY WAS 1 ADD ITEMS 54, 55 & 56 AT 1 QTY		
J	405585/B (E) [illegible] 3-31-76	4-7-76	
	ADDED ITEM 57 TO LM		
K	407869 (D) [illegible] 6-18-76	6/18/76	
	1) ZN C3 REMOVED LUG AND WIRE CONNECTED TO POWER SWITCH BRACKET. 2) ZN C3 VIEW B-B REVISED. (SH 1)		
L	413854 C [illegible] 12-6-76	[illegible]	
	1. ITEM 58 ADDED TO LM		
M	CN 423879 L. Kuna	12-7-77	
	1) ADDED ITEM NO 59 (90		

REV STATUS OF SHEETS	REV	A	L	L
	SHT	1	2	3

QTY REQD	PART NUMBER	DESCRIPTION	VENDOR AND VENDOR PART NUMBER

LIST OF MATERIALS

UNLESS OTHERWISE SPECIFIED
DECIMAL XX ± .02 .XXX ± .010
FRACTIONAL ± 1/64 APPLIED ± 1°
CONCENTRICITY MACHINED DIAMETERS .004 TIR
ALL SURFACES 125 RMS OR BETTER UNLESS OTHERWISE NOTED
DO NOT SCALE THIS DRAWING
ALL DIMENSIONS IN INCHES
SURFACES MARKED √ TO HAVE
REMOVE ALL BURRS
.010 TO .150 = .XX .005
.151 TO .500 = .XXX .010

SIZE	DWG NO	REV
B	7132926	A

TEXAS INSTRUMENTS INCORPORATED
DALLAS, TEXAS

TERMINAL ASSY

SCALE 1 SHEET 1 OF 3

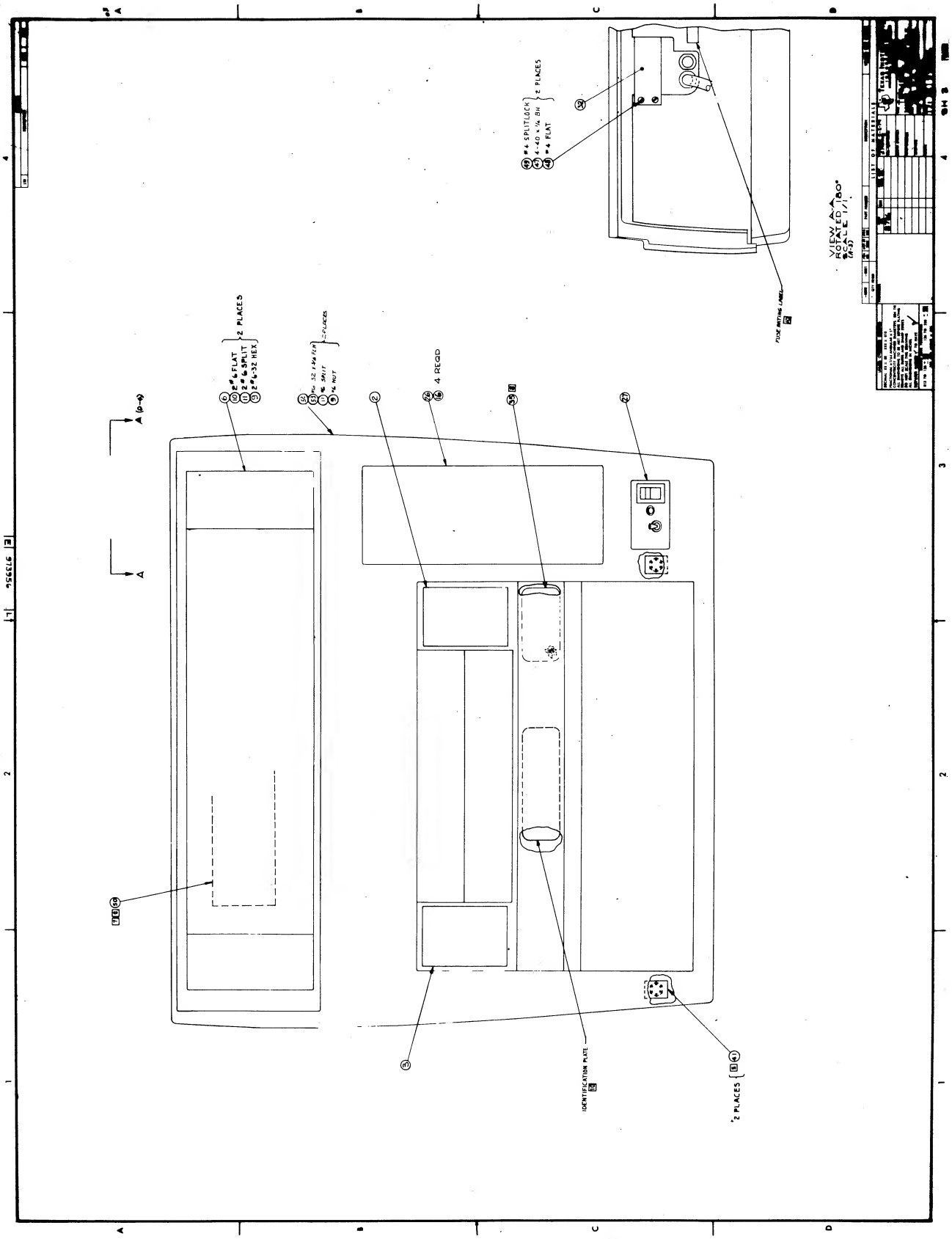
VIEW A-A
ROTATED 90°
SCALE 1/1
#6 SPLITLOCK } 2 PLACES
4-40 x 1/4 BH
#4 FLAT
TYPE RATING LABEL
#6 FLAT
#6 SPLIT
#6-32 HEX } 2 PLACES
#6 FLAT
#6 SPLIT
#6-32 HEX } 2 PLACES
#6 NUT
4 REQD
IDENTIFICATION PLATE
2 PLACES
A
A (0-0)

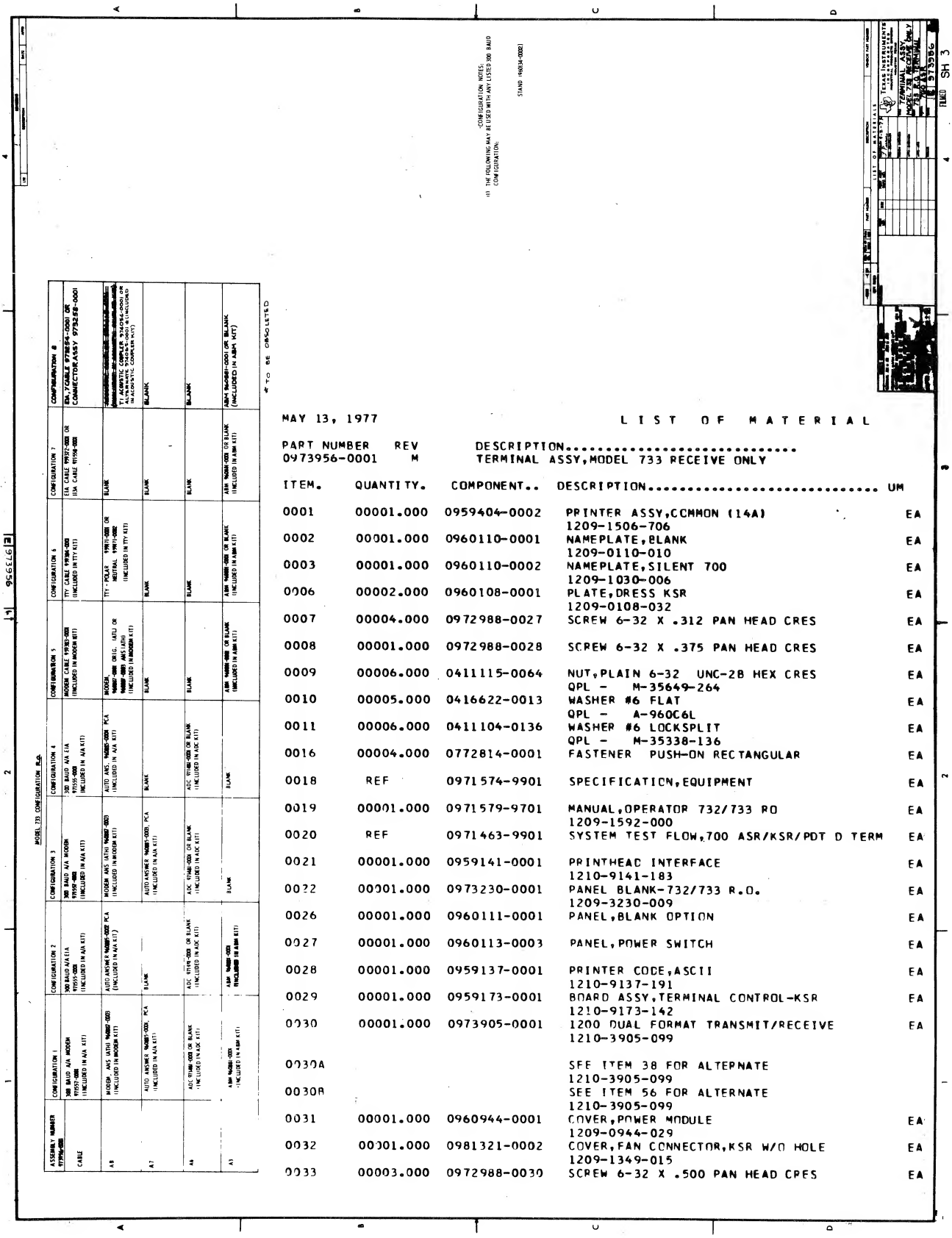

MAY 13, 1977

LIST OF MATERIAL

PART NUMBER REV DESCRIPTION.....
0973956-0001 M TERMINAL ASSY,MODEL 733 RECEIVE ONLY

ITEM.	QUANTITY.	COMPONENT..	DESCRIPTION.....	UM
0001	00001.000	0959404-0002	PRINTER ASSY,COMMON (14A) 1209-1506-706	EA
0002	00001.000	0960110-0001	NAMEPLATE,BLANK 1209-0110-010	EA
0003	00001.000	0960110-0002	NAMEPLATE,SILENT 700 1209-1030-006	EA
0006	00002.000	0960108-0001	PLATE,DRESS KSR 1209-0108-032	EA
0007	00004.000	0972988-0027	SCREW 6-32 X .312 PAN HEAD CRES	EA
0008	00001.000	0972988-0028	SCREW 6-32 X .375 PAN HEAD CRES	EA
0009	00006.000	0411115-0064	NUT,PLAIN 6-32 UNC-2B HEX CRES QPL - M-35649-264	EA
0010	00005.000	0416622-0013	WASHER #6 FLAT QPL - A-960C6L	EA
0011	00006.000	0411104-0136	WASHER #6 LOCKSPLIT QPL - M-35338-136	EA
0016	00004.000	0772814-0001	FASTENER PUSH-ON RECTANGULAR	EA
0018	REF	0971574-9901	SPECIFICATION,EQUIPMENT	EA
0019	00001.000	0971579-9701	MANUAL,OPERATOR 732/733 RO 1209-1592-000	EA
0020	REF	0971463-9901	SYSTEM TEST FLOW,700 ASR/KSR/PDT D TERM	EA
0021	00001.000	0959141-0001	PRINTHEAD INTERFACE 1210-9141-183	EA
0022	00001.000	0973230-0001	PANEL BLANK-732/733 R.O. 1209-3230-009	EA
0026	00001.000	0960111-0001	PANEL,BLANK OPTION	EA
0027	00001.000	0960113-0003	PANEL,POWER SWITCH	EA
0028	00001.000	0959137-0001	PRINTER CODE,ASCII 1210-9137-191	EA
0029	00001.000	0959173-0001	BOARD ASSY,TERMINAL CONTROL-KSR 1210-9173-142	EA
0030	00001.000	0973905-0001	1200 DUAL FORMAT TRANSMIT/RECEIVE 1210-3905-099	EA
0030A			SEE ITEM 38 FOR ALTERNATE 1210-3905-099	
0030B			SEE ITEM 56 FOR ALTERNATE 1210-3905-099	
0031	00001.000	0960944-0001	COVER,POWER MODULE 1209-0944-029	EA
0032	00001.000	0981321-0002	COVER,FAN CONNECTOR,KSR W/O HOLE 1209-1349-015	EA
0033	00003.000	0972988-0030	SCREW 6-32 X .500 PAN HEAD CRES	EA

MAY 13, 1977 L I S T O F M A T E R I A L

PART NUMBER REV DESCRIPTION.....
0973956-0001 M TERMINAL ASSY,MODEL 733 RECEIVE ONLY

ITEM.	QUANTITY.	COMPONENT..	DESCRIPTION.....	UM
0034	00006.000	0411101-0058	LOCKWASHER #6 EXTERNAL TOOTH CRES QPL - M-35335-58	EA
0035	00001.000	0960141-0001	LABEL,SERVICE 1209-0141-000	EA
0036	00001.000	0971412-0001	LABEL,PAPER LOADING	EA
0038	00000.000	0969455-0001	ASCII TRANSMIT/RECEIVE,DUAL FORMAT 1210-9455-000	EA
0038A			THIS ITEM IS AN ALTERNATE 1210-9455-000	
0038B			FOR ITEM 36 1210-9455-000	
0039	00002.000	0539665-0005	FASTENER,3M #3220	EA
0041	00002.000	0539665-0006	FASTENER,PLASTIC,INTLK MULTIPLE HEADS MMM - SJ-310	EA
0042	00001.000	0973231-0001	SWITCH ASSY,PAPER ADVANCE-732/733 R.O. 1209-3231-013	EA
0043	00001.000	0232478-2001	NUT 1/4-40 HEX FOR SWITCH C&K - 71-0 SERIES SW	EA
0044	00001.000	0772828-0001	RING LOCKING W/STD BUSHING .468 DIA C&K - A7-07	EA
0045	00001.000	0236406-0600	WASHER 1/4 INT TOOTH FOR SWITCH C&K - 71-0 SERIES SW	EA
0046	00001.000	0772827-0001	NUT,KNURL FACE .375 OD .062 THK 1/4-40 C&K - A7-28	EA
0047	00002.000	0972988-0013	SCREW 4-40 X .250 PAN HEAD CRES	EA
0048	00002.000	0411027-0803	WASHER .125 X .250 X .022 FLAT CRES QPL - M-15795-803	EA
0049	00002.000	0418431-0024	LOCKWASHER # 4 SPLIT,HELICAL CRES QPL - N-S1676-C4	EA
0050	00001.000	0972368-0001	LABEL,TERMINAL CONFIGURATION SEE - T- DRAWING	EA
0051	AR	0232208-3500	LABEL WIRE MARKER DATABS VINYL CLOTH 1286-2208-000	SH
0052	00001.000	0960105-0001	COVER,PRINTER (INJECTION MOLDING)	EA
0053	00002.000	0972990-0025	SCREW 6-32 X .375 FLT HEAD CRES	EA
0054	REF	0981305-9901	700 ASR/KSR CONFIG SPECIFICATION	EA
0055	00002.000	0411100-0071	LOCKWASHER #6 INTERNAL TOOTH CRES QPL - M-35333-71	EA
0056	00000.000	0959135-0001	ASCII TRANSMIT AND RECEIVE 1210-9135-082	EA
0056A			THIS ITEM IS AN ALTERNATE 1210-9135-082	
0056B			FOR ITEM 30 1210-9135-082	
0057	00001.000	0213714-0008	PAPER,HEAT PRINTING,WHT 8.54WX300 FT.RL.	RL
0088	00001.000	0969609-0002	IDENTIFICATION KIT,115VAC NON-UL APPROVE	EA
0089	00001.000	0999457-9701	MANUAL,FIELD SERVICE FLYER 1209-9457-000	EA
0090	00001.000	0999456-9701	MANUAL,INFORMATION REQUEST FORM 1209-9456-000	EA

959390 D

REVISIONS (CONT)			
LTR	DESCRIPTION	DATE	APPD
AC	CN414852 C. Edmundson	7/18/77	
(1) NOTE 1 WAS: ITEMS 7, 8, & 9 HAVE TO BE ASSEMBLED TO ITEM 4 BEFORE ITEM 4 CAN BE ASSEMBLED TO ITEM 1. RED DOT ON ITEMS 7, 8, & 9 INDICATES POSITIVE PIN OF CAP. TIGHTEN MOUNTING SCREWS (ITEM 29) TO 15-18 IN LBS TORQUE.			
AD	CN381847 [illegible]	7/14/77	
(1) ITEM 33 WAS QTY 6, PN411101-0060.			

NOTES:

1. MARK ITEMS 7, 8, AND 9 ON THE END OF THE CANS (OPPOSITE END FROM TERMINALS) WITH A BLACK DOT OR STRIPE TO INDICATE POSITIVE TERMINAL. ITEMS 7, 8, AND 9 HAVE TO BE ASSEMBLED TO ITEM 4 BEFORE ITEM 4 CAN BE ASSEMBLED TO ITEM 1. TIGHTEN MOUNTING SCREWS (ITEM 29) TO 15-18 IN-LBS TORQUE.
2. ASSEMBLE ITEM 3 TO ITEM 2. INSTALL ASSY INTO ITEM 1 SO AIR FLOWS AS INDICATED.
3. CLEAN AREA TO WHICH CLAMP, ITEM 18 IS TO BE SECURED.
4. SECURE RING LUG OF JUMPER (ITEM 30) AND RING LUG OF JUMPER (ITEM 36) UNDER HEAD OF SCREW (ITEM 35) LAY CAPACITOR FLAT ON PCB AND SOLDER TO GND BUSS AS SHOWN. BE SURE THAT THE LEAD CONNECTED TO THE RING LUG DOES NOT TOUCH THE PCB.
5. BROWN DOT TO BE LOCATED AT CARD SLOT ONE.
6. FAN CABLE CONNECTS TO TB1-3 AND TB1-6
7. BROWN DOT TO BE LOCATED AT CARD SLOT A9
8. MANUFACTURERS HARDWARE MAY BE USED WHEN NUT THICKNESS IS LESS THAN .165 (5/32).

REVISIONS			
LTR	DESCRIPTION	DATE	APPD
W	403277 C. Edmundson 7-8-75 ON LM: 1) ITEM 3 WAS P/N 539743-0001.	7/18/75	
Y	391773 (D) [illegible] 8/9/75 DELETED 1) ZONE C-3 BALLOON ITEM 15, 15 & 17. 2) ZONE C-3 PRINTER COVER 2) LM IT 19 WAS P/N 960952-0001, QTY 1 3) FROM LM TITLE "10 AMP." CHG 1) IT. 15 AND 17 WAS QTY 21 ADDED 1) ZONE B & C 4 MODIFICATION OF SIDE VIEW	8-12-75	
Z	409809 S. Mulcahy 10-4-75 1) ADDED (ITEM 35) (& ITEM 36) 2) ITEM 15 02 CALLOUT WAS 4 3) NOTE 4 WAS: "SECURE SPADE LUG OF JUMPER (ITEM 30) UNDER HEAD OF SCREW. LAY CAPACITOR FLAT ON PCB & SOLDER TO GND BUSS AS SHOWN. BE SURE THAT THE LEAD CONNECTED TO THE SPADE LUG DOES NOT TOUCH THE PCB." 4) ITEM 15 QUANTITY WAS 19	11/18/75	
AA	409893 (B) J. Yancy 5-27-76 1) LM ITEM 7 WAS P/N 539801-0002, QTY OF 1 2) LM ITEM 8 WAS P/N 539719-0002, QTY OF 1	6/30/76	
AB	416918 (C) L. Kuo 11-4-76 1) ADDED ITEM 37, 38 TO LM 2) ADDED NOTE 8	12/6/76	
REVISIONS CONTINUED ON B-D			

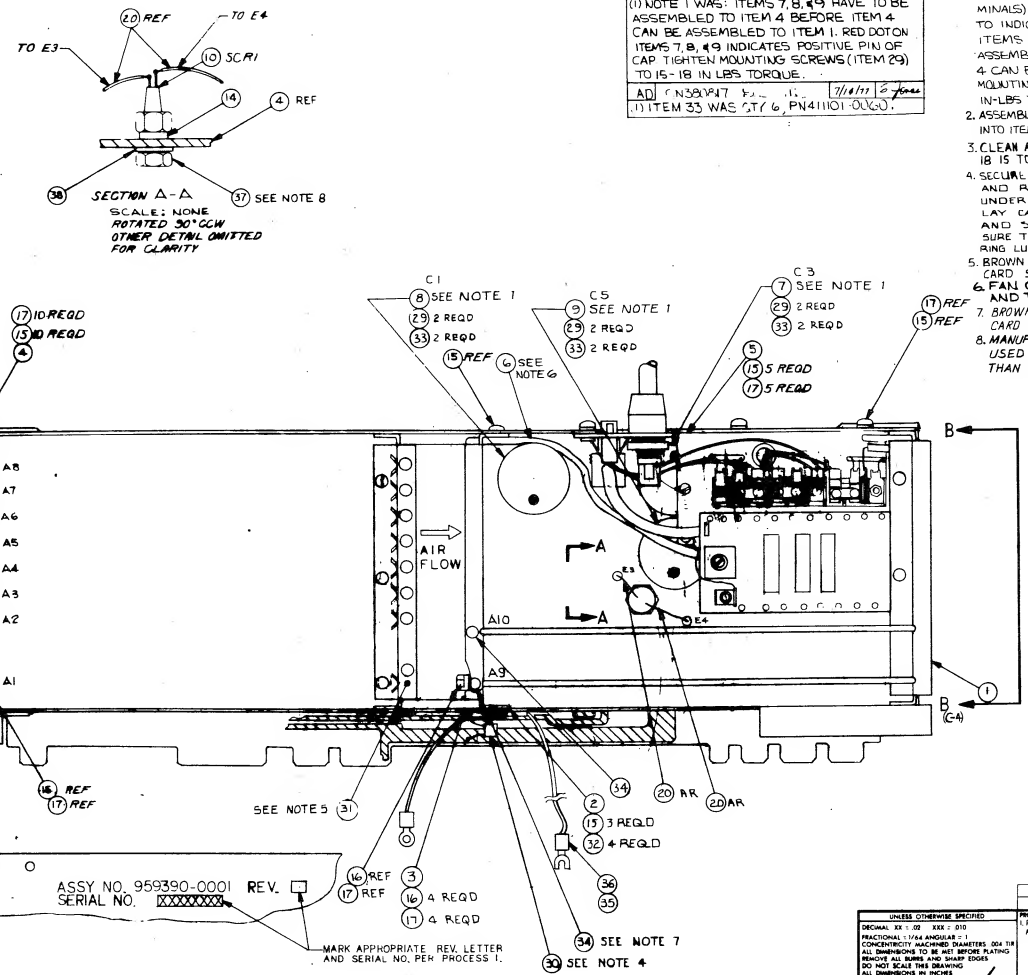

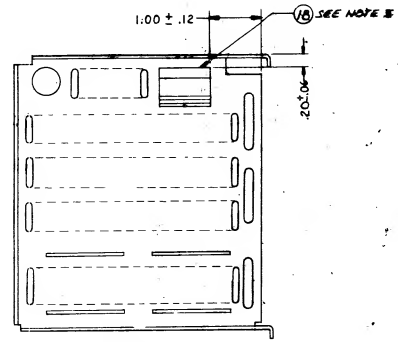

-0002 QTY REQD	-0001 QTY REQD	ITEM NO.	UNIT OF MEAS	PART NUMBER	DESCRIPTION	VENDOR PART NUMBER
					LIST OF MATERIALS	

UNLESS OTHERWISE SPECIFIED
DECIMAL XX ± .02 XXX ± .010
FRACTIONAL ± 1/64 ANGULAR ± 1°
CONCENTRICITY MACHINED DIAMETERS .004 TIR
ALL DIMENSIONS TO BE MET BEFORE PLATING
REMOVE ALL BURRS AND SHARP EDGES
DO NOT SCALE THIS DRAWING
ALL DIMENSIONS IN INCHES
SURFACES MARKED ✓ TO HAVE
ROLLING HOLE TOLERANCES
.813 TO 136 ± .003 136 TO .250 ± .005
.386 AND ABOVE ± .008

PROCESSES
1. RUBBER STAMP F-100 MGT. 1L COLOR BLK.

PROJECT NO.	SIZE	DRAWING NO.	REV
8726	D	959404	

TEXAS INSTRUMENTS INCORPORATED
INDUSTRIAL PRODUCTS DIVISION
ATTLEBORO, MASS.
POWER MODULE

959390

PART NUMBER	REV	DESCRIPTION
0959390-0001	AD	POWER MODULE ASSY

ITEM.	QUANTITY.	COMPONENT..	DESCRIPTION	UM
0001	00001.000	0959403-0001	HOLDER,PW BD-8 POS 1209-9403-057	EA
0002	00001.000	0959300-0001	HOLDER,PW BD-2 POS 1209-9300-040	EA
0003	00001.000	0972479-0001	FAN,AC 115V 50/60HZ 7W .06LINE/A 1650RPM RTN - 02-117/MOD WR2	EA
0004	00001.000	0959157-0001	POWER MODULE MOTHER BOARD 1210-9157-197	EA
0005	00001.000	0959395-0001	A.C. PWR ASSY 1209-9395-058	EA
0006	00001.000	0961306-0001	CABLE ASSY,WHISPER FAN 1209-1306-037	EA
0007	00001.000	0996048-0002	CAP 5000 MF 30VDC .012HZ SPR - 3-D9324	EA
0007A			C3 SPR - 3-D9324	
0008	00001.000	0996048-0001	CAP 5900 MF 60VDC .051HZ SPR - 3-D65C1	EA
0008A			C1 SPR - 3-D65C1	
0009	00001.000	0539719-0001	CAPACITOR 20000. MF 10V MAL - MA-0-94807	EA
0009A			C5 MAL - MA-0-94807	
0010	00001.000	0232934-0050	RECTIFIER PNPN SCR 35A W/HARDWARE MOT - 2N-896	EA
0010A			SCR1 MOT - 2N-896	
0013	REF	0959188-9901	DIAGRAM,LOGIC DET-POWER MODULE,MOTHER	EA
0014	00001.000	0185799-0001	SPACER-SYNCHRO MOTOR 1209-1020-017	EA
0015	00020.000	0972988-0027	SCREW 6-32 X .312 PAN HEAD CRES	EA
0016	00004.000	0416453-0022	NUT,PLAIN 6-32 UNC-2B HEX CRES,SMALL QPL - N-S671C6	EA
0017	00019.000	0411100-0071	LOCKWASHER #6 INTERNAL TOOTH CRES QPL - M-35333-71	EA
0018	00001.000	0231123-0510	CLIP ADHESIVE BACK PLASTIC 1/4 ID DEK - DK-250	EA
0020	AR	0538347-4999	WIRE HOOKUP 8-20 AWG 19 STR WHITE JUC - H-0118	FT
0029	00006.000	0972986-0007	SCREW 10-32 .312 PAN HEAD CRES	EA
0030	00001.000	0960967-0002	LEAD,ELECTRICAL-GND W/CAP 1209-1568-049	EA
0031	AR	0972358-0004	COLOR CODING KIT,PRESS SENSITIVE ADHES SEE - T- DRAWING	EA
0032	00004.000	0411101-0058	LOCKWASHER #6 EXTERNAL TOOTH CRES QPL - M-35335-58	EA
0033	00006.000	0410905-0010	WASHER,EXTERNAL TOOTH	EA
0034	AR	0972358-0005	COLOR CODING KIT,PRESS SENSITIVE ADH SEE - T- DRAWING	EA
0035	00001.000	0972988-0028	SCREW 6-32 X .375 PAN HEAD CRES	EA
0036	00001.000	0960967-0001	LEAD,ELECTRICAL-GRD 1209-0967-059	EA
0037	00001.000	0411010-0003	NUT,JAM,HEXAGON QPL - A-316-C4R	EA
0038	00001.000	0411100-0074	LOCKWASHER 1/4 INTERNAL TOOTH CRES QPL - M-35333-74	EA

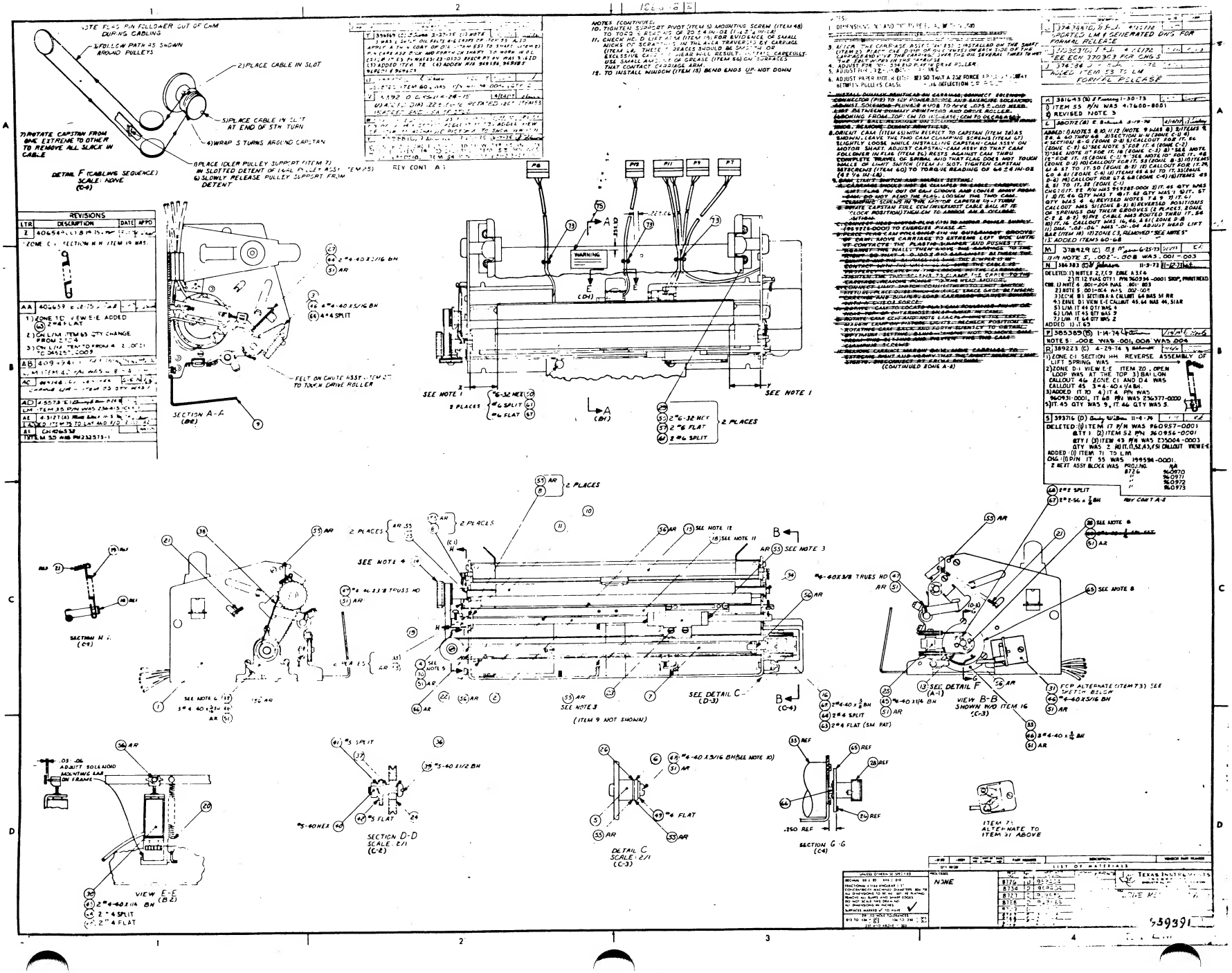
DETAIL F (CABLING SEQUENCE)
SCALE: NONE
(C-4)
SECTION A-A
(B2)
SECTION H-H
(C4)
SECTION D-D
SCALE: 2/1
(C-2)
VIEW E-E
(B2)
DETAIL C
SCALE: 2/1
(C-3)
SECTION G-G
(C4)
VIEW B-B
SHOWN W/O ITEM 16
(C-3)
SEE DETAIL C-
(D-3)
SEE DETAIL F
(A-1)
SEE NOTE 1
SEE NOTE 3
SEE NOTE 4
SEE NOTE 5
SEE NOTE 6
SEE NOTE 8
SEE NOTE 10
SEE NOTE 11
SEE NOTE 12
2 PLACES
(ITEM 9 NOT SHOWN)
ITEM 71 ALTERNATE TO ITEM 31 ABOVE
NONE
LIST OF MATERIALS
REVISIONS
LTR DESCRIPTION DATE APPD
Z
AA
AB
AC
AD
AE
AF
BE
BF
BG
BH
BJ
BK
BL
BM
BN
BP
BR
BS
BT
BU
BV
BW
BX
BY
BZ
CA
CB
CC
CD
CE
CF
CG
CH
CJ
CK
CL
CM
CN
CP
CR
CS
CT
CU
CV
CW
CX
CY
CZ
DA
DB
DC
DD
DE
DF
DG
DH
DJ
DK
DL
DM
DN
DP
DR
DS
DT
DU
DV
DW
DX
DY
DZ
EA
EB
EC
ED
EE
EF
EG
EH
EJ
EK
EL
EM
EN
EP
ER
ES
ET
EU
EV
EW
EX
EY
EZ
FA
FB
FC
FD
FE
FF
FG
FH
FJ
FK
FL
FM
FN
FP
FR
FS
FT
FU
FV
FW
FX
FY
FZ
GA
GB
GC
GD
GE
GF
GG
GH
GJ
GK
GL
GM
GN
GP
GR
GS
GT
GU
GV
GW
GX
GY
GZ
HA
HB
HC
HD
HE
HF
HG
HH
HJ
HK
HL
HM
HN
HP
HR
HS
HT
HU
HV
HW
HX
HY
HZ
JA
JB
JC
JD
JE
JF
JG
JH
JJ
JK
JL
JM
JN
JP
JR
JS
JT
JU
JV
JW
JX
JY
JZ
KA
KB
KC
KD
KE
KF
KG
KH
KJ
KK
KL
KM
KN
KP
KR
KS
KT
KU
KV
KW
KX
KY
KZ
LA
LB
LC
LD
LE
LF
LG
LH
LJ
LK
LL
LM
LN
LP
LR
LS
LT
LU
LV
LW
LX
LY
LZ
MA
MB
MC
MD
ME
MF
MG
MH
MJ
MK
ML
MM
MN
MP
MR
MS
MT
MU
MV
MW
MX
MY
MZ
NA
NB
NC
ND
NE
NF
NG
NH
NJ
NK
NL
NM
NN
NP
NR
NS
NT
NU
NV
NW
NX
NY
NZ
PA
PB
PC
PD
PE
PF
PG
PH
PJ
PK
PL
PM
PN
PP
PR
PS
PT
PU
PV
PW
PX
PY
PZ
QA
QB
QC
QD
QE
QF
QG
QH
QJ
QK
QL
QM
QN
QP
QR
QS
QT
QU
QV
QW
QX
QY
QZ
RA
RB
RC
RD
RE
RF
RG
RH
RJ
RK
RL
RM
RN
RP
RR
RS
RT
RU
RV
RW
RX
RY
RZ
SA
SB
SC
SD
SE
SF
SG
SH
SJ
SK
SL
SM
SN
SP
SR
ST
SU
SV
SW
SX
SY
SZ
TA
TB
TC
TD
TE
TF
TG
TH
TJ
TK
TL
TM
TN
TP
TR
TS
TT
TU
TV
TW
TX
TY
TZ
UA
UB
UC
UD
UE
UF
UG
UH
UJ
UK
UL
UM
UN
UP
UR
US
UT
UU
UV
UW
UX
UY
UZ
VA
VB
VC
VD
VE
VF
VG
VH
VJ
VK
VL
VM
VN
VP
VR
VS
VT
VU
VV
VW
VX
VY
VZ
WA
WB
WC
WD
WE
WF
WG
WH
WJ
WK
WL
WM
WN
WP
WR
WS
WT
WU
WV
WW
WX
WY
WZ
XA
XB
XC
XD
XE
XF
XG
XH
XJ
XK
XL
XM
XN
XP
XR
XS
XT
XU
XV
XW
XX
XY
XZ
YA
YB
YC
YD
YE
YF
YG
YH
YJ
YK
YL
YM
YN
YP
YR
YS
YT
YU
YV
YW
YX
YY
YZ
ZA
ZB
ZC
ZD
ZE
ZF
ZG
ZH
ZJ
ZK
ZL
ZM
ZN
ZP
ZR
ZS
ZT
ZU
ZV
ZW
ZX
ZY
ZZ
359391

OCTOBER 14, 1977 LIST OF MATERIAL

PART NUMBER REV DESCRIPTION.....
0959391-0001 AF DRIVE MECHANISM ASSY

ITEM.	QUANTITY.	COMPONENT..	DESCRIPTION.....		UM
0001	00001.000	0959259-0001	FRAME,DRIVE MECHANISM 1209-9259-046		EA
0002	00001.000	0959260-0001	SHAFT,STRAIGHT-CARRIAGE 1209-9260-045		EA
0003	00001.000	0959263-0001	GUIDE,PAPER 1209-9263-032		EA
0004	00001.000	0215577-0001	COLLAR,DRIVE SHAFT 1209-5577-043	01+00+04	EA
0005	00001.000	0959291-0001	SUPPORT,PIVOT 1209-9291-003		EA
0006	00001.000	0960925-0001	WASHER,NONMETALLIC		EA
0007	00001.000	0959281-0001	SUPPORT,IDLER PULLEY 1209-9281-024		EA
0008	00004.000	0959286-0001	BEARING,SLEEVE-DRIVE ROLLER - - -000		EA
0009	00001.000	0959290-0001	GUIDE,FLEX CABLE 1209-9290-022		EA
0010	00001.000	0959261-0001	ROLLER,DRIVE		EA
0011	00001.000	0244440-0003	BUMPER,.500 O.D. 1224-1021-005	01+00+02	EA
0013	00001.000	0959297-0001	CABLE,DRIVE		EA
0014	00001.000	0959283-0001	PULLEY,36T 1209-9283-002		EA
0015	00001.000	0959428-0001	WINDOW ASSY 1205-9428-000		EA
0016	00001.000	0960930-0001	COVER LIMIT SWITCH 1209-0930-004		EA
0018	00001.000	0959266-0001	ARM,HEAD LIFT 1209-9266-042		EA
0019	00001.000	0960933-0001	SPRING,LIFT		EA
0020	00001.000	0959268-0001	SPRING,HEAD FORCE		EA
0021	00002.000	0959270-0001	SPRING,TOGGLE		EA
0022	00001.000	0971417-0001	SPRING,CABLE TENSION		EA
0023	00001.000	0959413-0001	CARRIAGE ASSY 1209-9413-035		EA
0024	00001.000	0959402-0001	PULLEY,CABLE 1209-9402-000		EA
0025	00001.000	0959417-0001	DUAL PULLEY ASSY 1209-9417-027		EA
0026	00001.000	0959416-0001	FLAG,LIMIT SWITCH 1209-9416-045		EA
0027	00001.000	0959421-0001	CHUTE ASSY 1209-9421-034		EA
0028	00001.000	0959273-0001	CAPSTAN,MOTOR 1209-9273-049		EA
0029	00002.000	0959424-0001	SUPPORT SUBASSY,PAPER ROLL 1209-9424-138		EA
0030	00001.000	0959412-0001	SOLENOID ASSY 1205-9412-000		EA
0031	00001.000	0986371-0001	LIMIT SWITCH ASSY 1205-6371-026		EA
0032	00001.000	0959400-0001	PAPER MOTOR ASSY 1205-9400-014		EA
0033	00001.000	0959399-0001	HEAD MOTOR ASSY 1205-9399-017		EA
0034	00001.000	0234907-0000	RING 5133-25 -5133-25		EA
0035	00004.000	0972485-0001	WASHER,STEEL-THRUST		EA
0036	00001.000	0154295-0016	SPACER-BEARING 1210-1018-006		EA
0037	00001.000	0154295-0094	SPACER - BEARING 1209-1019-010		EA
0038	00001.000	0537711-0002	BELT,TIMING 400P 3/16 WIDE 85 TH ICO -P36051-0085		EA
0039	00001.000	0235042-0011	SCREW 5-40X1/2 SS BH		EA
0040	00001.000	0232454-0010	NUT 5-40X1/4X3/32 THK SST SMALL PATTERN		EA
0041	00001.000	0236383-0002	WASHER #5 CAD.PLTD.SPLITLOC		EA
0042	00001.000	0418154-0056	WASHER,FLAT #5 CRES		EA

PART NUMBER	REV	DESCRIPTION
0959391-0001	AF	DRIVE MECHANISM ASSY

ITEM.	QUANTITY.	COMPONENT..	DESCRIPTION	UM
0044	00002.000	0972988-0012	SCREW 4-40 X .188 PAN HEAD CRES	EA
0045	00003.000	0972988-0013	SCREW 4-40 X .250 PAN HEAD CRES	EA
0046	00011.000	0972988-0014	SCREW 4-40 X .312 PAN HEAD CRES	EA
0047	00002.000	0235025-0010	SCREW 4-40X3/8 TRUSS HD	EA
0048	00001.000	0235027-0050	SCREW 4-40X9/16 BH	EA
0049	00001.000	0416622-0011	WASHER #4 FLAT QPL - AN960C4L	EA
0050	00006.000	0416453-0022	NUT,PLAIN 6-32 UNC-2B HEX CRES,SMALL QPL - NAS671C6	EA
0051	AR	0235182-0002	LOCTITE SEALENT GRADE 242 LOC --242	EA
0055	AR	0996622-0001	OIL,TURBINE-GRADE 32 059595-TEXACO	EA
0056	AR	0232334-6C50	LUBRICANT SILICONE GRS LT GR 2 OZ TUBE GE -G-322-L 2 OZ.	TU
0057	00006.000	0416622-0013	WASHER #6 FLAT QPL - AN960C6L	EA
0058	REF	0959226-9901	TEST PROCEDURE	EA
0059	REF	0962299-9901	DIAGRAM,ELTN SCHEMATIC-DRIVE MECHANISM	EA
0061	00004.000	0411104-0136	WASHER #6 LOCKSPLIT QPL - MS35338-136	EA
0062	00002.000	0972988-0015	SCREW 4-40 X .375 PAN HEAD CRES	EA
0063	00004.000	0411027-0803	WASHER .125 X .250 X .022 FLAT CRES QPL - MS15795-803	EA
0064	00008.000	0418431-0024	LOCKWASHER # 4 SPLIT,HELICAL CRES QPL - NAS1676-C4	EA
0065	00001.000	0959271-0001	CAM,CONTROL - - -000	EA
0066	00001.000	0959274-0001	CLAMP,CAM 1209-9274-030	EA
0067	00002.000	0972988-0010	SCREW 2-56 X .875 PAN HEAD CRES	EA
0068	00002.000	0411104-0134	WASHER #2 LOCKSPLIT QPL - MS35338-134	EA
0069	REF	0971468-9901	ADJUSTMENT PROCEDURE	EA
0070	00001.000	0045257-0009	SCREW-6-32 HEADLESS SET (SPECIAL)	EA
0071	REF	0984199-9901	RMR TEST PROCEDURE,DRIVE MECH ASSY	EA
0072	REF	0984112-9901	ADJUSTMENT PROD-DPG AND FDBK SENSOR	EA
0073	00000.000	0959419-0001	LIMIT SWITCH ASSY 1205-9419-000	EA
0073A			ITEM 73 MAY BE USED AS AN 1205-9419-000	
0073B			ALTERNATE TO ITEM 31 1205-9419-000	
0074	00003.000	0418212-0040	STRAP,TIEDOWN,ADJUSTABLE,PLASTIC QPL - MS3367-4-9	EA
0075	00001.000	0989712-0001	LABEL,WARNING,733/735 1209-9712-000	EA
9998	00001.000	0239999-9998	COST, AS REQUIRED	EA

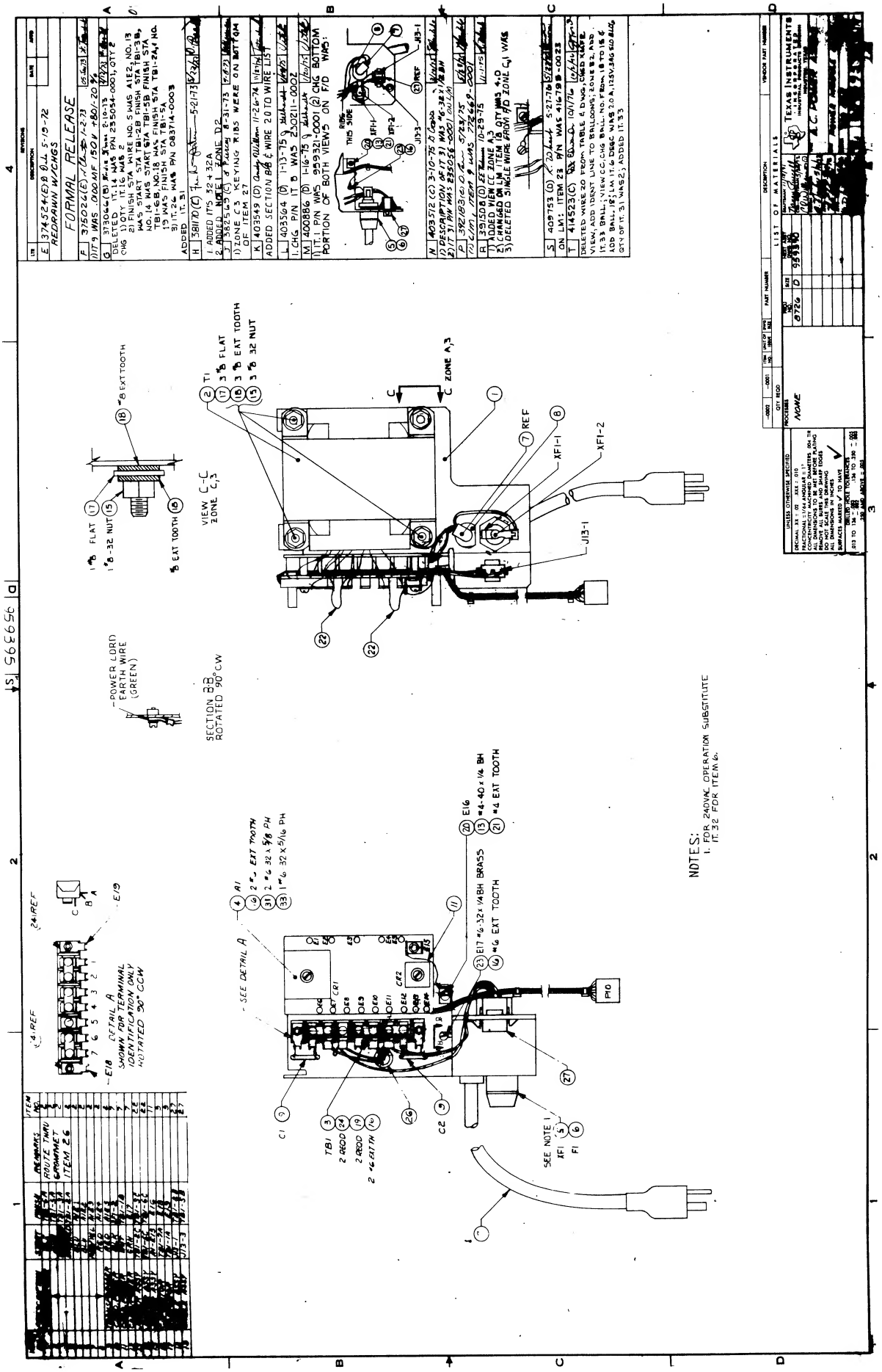
FORMAL RELEASE
REDRAWN W/CHGS
NOTES:
1. FOR 240VAC OPERATION SUBSTITUTE IT.32 FOR ITEM 6.
SECTION BB ROTATED 90° CW
VIEW C-C ZONE C,3
DETAIL A SHOWN FOR TERMINAL IDENTIFICATION ONLY ROTATED 90° CCW
SEE DETAIL A
SEE NOTE 1
POWER CORD EARTH WIRE (GREEN)
TEXAS INSTRUMENTS
LIST OF MATERIALS

PART NUMBER	REV	DESCRIPTION
0959395-0001	T	A.C. PWR ASSY

ITEM.	QUANTITY.	COMPONENT..	DESCRIPTION	UM
0001	00001.000	0981331-0001	BRACKET,POWER SUPPLY 1209-1331-017	EA
0002	00001.000	0959333-0001	TRANSFORMER,AC POWER 1209-9333-000	EA
0002A			T1 1209-9333-000	
0003	00001.000	0959346-0001	TERMINAL BLOCK-7 TERMINAL	EA
0003A			TB1	
0004	00001.000	0960889-0001	RECTIFIER BOARD ASSY 1210-0889-122	EA
0004A			A1 1210-0889-122	
0005	00001.000	0232097-0210	HOLDER FUSE PNL MTG W/QIK CONN TERMINALS BUS - HT--DD W/QIK C	EA
0005A			XF1 BUS - HT--DD W/QIK C	
0006	00001.000	0411787-0012	FUSES 3.0 A 125V 3AG SLOW BLOW BUS - M-X	EA
0006A			F1 BUS - M-X	
0007	00001.000	0959382-0001	CORD ASSY,POWER 1209-9382-052	EA
0008	00001.000	0230211-0010	BUSHING STRT-THRU.330 WIRE .125 CHAS THK HEY - -S--6L-1	EA
0009	00002.000	0410529-0202	CAP FIX CERAMIC .002 MF GMV 1 KV CRL - D--202	EA
0009A			C1 C2 CRL - D--202	
0011	00001.000	0959380-0001	JUMPER ASSY,GREEN 1209-9380-020	EA
0013	00001.000	0972988-0013	SCREW 4-40 X .250 PAN HEAD CRES	EA
0015	00004.000	0416453-0023	NUT,PLAIN 8-32 UNC-2B HEX CRES,SMALL QPL - N-S671C8	EA
0016	00005.000	0411101-0058	LOCKWASHER #6 EXTERNAL TOOTH CRES QPL - M-35335-58	EA
0017	00004.000	0416154-0060	REPLACED BY 416622-0024 QPL - N-S620-C8	EA
0018	00005.000	0411101-0059	LOCKWASHER # 8 EXTERNAL TOOTH CRES QPL - M-35335-59	EA
0019	00002.000	0532351-0610	NUT,SLEEVE ALUMINUM ALLOY	EA
0020	00001.000	0772458-0001	TAB,2-SIDE QUICK CONNECT-DISCONNECT KUL - KT-0	EA
0020A			E16 KUL - KT-0	
0021	00001.000	0411101-0057	LOCKWASHER # 4 EXTERNAL TOOTH CRES QPL - M-35335-57	EA
0022	00002.000	0959380-0002	JUMPER ASSY,RED 1209-1504-041	EA
0023	00001.000	0996100-0026	SCREW #6-32 X 1/4 X .138 PAN HEAD	EA
0023A			E17	
0024	00002.000	0772459-0001	LUG,TERMINAL SOLDER KUL - 59--3/4ST	EA
0024A			E18 E19 KUL - 59--3/4ST	
0026	00001.000	0083714-0002	GROMMET 3/16I.D. 1041 WAL - 7-32	EA
0027	00001.000	0960071-0001	CABLE ASSY,ASR FAN 1209-0071-040	EA
0030	REF	0959200-9901	DIAGRAM,SCHEMATIC-AC PWR.ASSY	EA
0031	00001.000	0972988-0031	SCREW 6-32 X .625 PAN HEAD CRES	EA
0032	REF	0411787-0015	FUSE 1.5 A 250V 3AG SLOW BLOW	EA
0032A			F1 BUS - M-A	
0033	00001.000	0972988-0027	SCREW 6-32 X .312 PAN HEAD CRES	EA

NOTES:
1. BE SURE ORIENTATION BETWEEN SENSOR BLOCKS (IT'S. 10 & 11) AND SCREW HOLES ON FRONT IS AS SHOWN
2. SUPPORT MOTOR SHAFT WHILE PRESSING ON WHEEL (IT 2)
REVISIONS
LTR DESCRIPTION DATE APPD
E 3/22/72 UPDATED LM & GENERATED DWG FOR FORMAL RELEASE
FORMAL RELEASE
F 381564 (C) 3/10/73 1.) ZONE 3B DELETED ITEMS 14, 17, 18, 19 & SEE NOTE 3 2.) ZONE 2B DELETED ITEMS 3, 4, 5, 17, & 20, DIM .590±.010 WAS .600±.010 3.) ZONE 1-B ADDED ITEM 16 4.) CHANGE NOTE 1 FROM MOUNTING SCREWS TO SCREW HOLES, NOTE 3 WAS 'ORIENT CAM (IT.4) APPROX. AS SHOWN WITH RESPECT TO SETSCREWS (IT. 20) IN CAPSTAN (IT. 5) 5.) ON LM ITEM 14 WAS QTY 5, ITEM 16 WAS QTY 1 ITEM 3 WAS 959274-0001 QTY 1, ITEM 4 WAS 959271-0001 QTY 1, ITEM 5 WAS 959273-0001 QTY 1, ITEM 14 WAS 235023-0001 QTY 5, ITEM 17 WAS 235182-0006 QTY AR, ITEM 18 WAS 235011-1000 QTY 2, ITEM 19 WAS 236367-0000 QTY 2, ITEM 20 WAS 411134-0086 QTY 2
G 398891 (C) 10-17-74 10/22
ITEM 13 P/N WAS 236315-0000 & QTY WAS AR
ITEM 14 P/N WAS 235023-0001
H CN424063 6-22-77
1) ITEMS 10 & 11 EXCHNG LOC
MARK P11
MARK P9
P11
P9
8
7
6 4 REQD
7 REF
13
1.00 ± .50
11.00 ± .50
.590 ± .010
16
2 NOTE 2
10
11
16
14 #4-40 X 5/16BH
15 #4 EXT TOOTH
2 PLACES
1 B1
WIRE NO. | DESCRIPTION | START | FINISH | ITEM NO.
1 | MOTOR | BLK | P9-1 | 1
2 | MOTOR | RED | P9-2 | 1
3 | MOTOR | BRN | P9-3 | 1
4 | MOTOR | ORN | P9-4 | 1
5 | SENS. BLK | RED | P11-1 | 11
6 | | BRN | P11-2 | 11
7 | | VIO | P11-3 | 10
8 | | WHT | P11-4 | 10
9 | | GRN | P11-5 | 11
10 | SENS. BLK | BLK | P11-6 | 10
UNLESS OTHERWISE SPECIFIED
DECIMAL XX .02 XXX .010
FRACTIONAL 1/64 ANGULAR ±1
CONCENTRICITY MACHINED DIAMETERS .004 TIR
ALL DIMENSIONS TO BE MET BEFORE PLATING
REMOVE ALL BURRS AND SHARP EDGES
DO NOT SCALE THIS DRAWING
ALL DIMENSIONS IN INCHES
SURFACES MARKED ✓ TO HAVE
DRILLED HOLE TOLERANCES
-0002 | -0001 | PART NUMBER | DESCRIPTION | VENDOR PART NUMBER
QTY REQD
LIST OF MATERIALS
PROCESSES
1. HOT STAMP F-100, HEIGHT .12, COLOR WHITE
8726 E 959391
TEXAS INSTRUMENTS INCORPORATED INDUSTRIAL PRODUCTS DIVISION HOUSTON, TEXAS
HEAD MOTOR ASSY.
DRIVE MECHANISM
700 ASR
1/1 D 959399
LM

PART NUMBER	REV	DESCRIPTION.....
0959309-0001	H	HEAD MOTOR ASSY

ITEM.	QUANTITY.	COMPONENT..	DESCRIPTION.....	UM
0001	00001.000	0959334-0001	MOTOR,STEPPING DRIVE	EA
0001A			B1	
0002	00001.000	0215505-0001	WHEEL,FEEDBACK SENSOR - - -000	EA
0006	0004.000	0231553-0008	CONTACT P.C. BD. AMP - 61-68-1	EA
0007	00001.000	0231220-0102	CONNECTOR P.C. BOARD EDGE 4CKT AMP - 48-519-4	EA
0007A			P5 AMP - 48-519-4	
0008	00001.000	0231220-0104	CONNECTOR P.C. BOARD EDGE 6CKT AMP - 48-519-6	EA
0008A			P11 AMP - 48-519-6	
0010	00001.000	0959423-0001	SENSOR BLOCK ASSY,UPPER 1205-9423-030	EA
0011	00001.000	0959423-0002	SENSOR BLOCK ASSY,LOWER 1205-1505-030	EA
0013	00000.900	0411634-1700	SLEEVE,PVC, .166 DIA. BLACK QPL - M-L-1-631	FT
0014	00002.000	0972988-0014	SCREW 4-40 X .312 PAN HEAD CRES	EA
0015	00002.000	0411101-0057	LOCKWASHER # 4 EXTERNAL TOOTH CRES QPL - M-35335-57	EA
0016	00002.000	0418212-0040	STRAP,TIEDOWN,ADJUSTABLE,PLASTIC QPL - M-3367-4-9	EA

WIRE NO.	DESCRIPTION	START	FINISH	ITEM NO.
1	MOTOR	BLK	P8-1	1
2	MOTOR	RED	P8-2	1
3	MOTOR	BRN	P8-3	1
4	MOTOR	ORN	P8-4	1

NOTES:
1. PRESS ITEM 2 ON MOTOR SHAFT.
   SUPPORT SHAFT FROM OPPOSITE END TO PREVENT DAMAGING BEARINGS

REVISIONS			
LTR	DESCRIPTION	DATE	APPD
A	11-16-71 N. Purcell REVISED FOR PRERELEASE	5/1/72	
	FORMAL RELEASE		
B	381563(C) D Dube 3-3-73 1) ZONE A1, .375 WAS .312 2) ZONE A1, DELETED .120±.020 DIM FOR MOUNTING SCREWS 3) DELETED MOUNTING SCREWS 4) ON LM, DELETED IT. 7 & 8; IT. 7 WAS 3/EA/235023-0001 SCREW 4-40 X 1/4 BH SST; IT. 8 WAS AR/TU/ 235102-0016 / SEALANT LOCTITE SCREWLOCK	5/8/73	
C	398892 (C) Andy Willson 10-17-74 ITEM 5 P/N WAS 236315-0000	11/18/74	

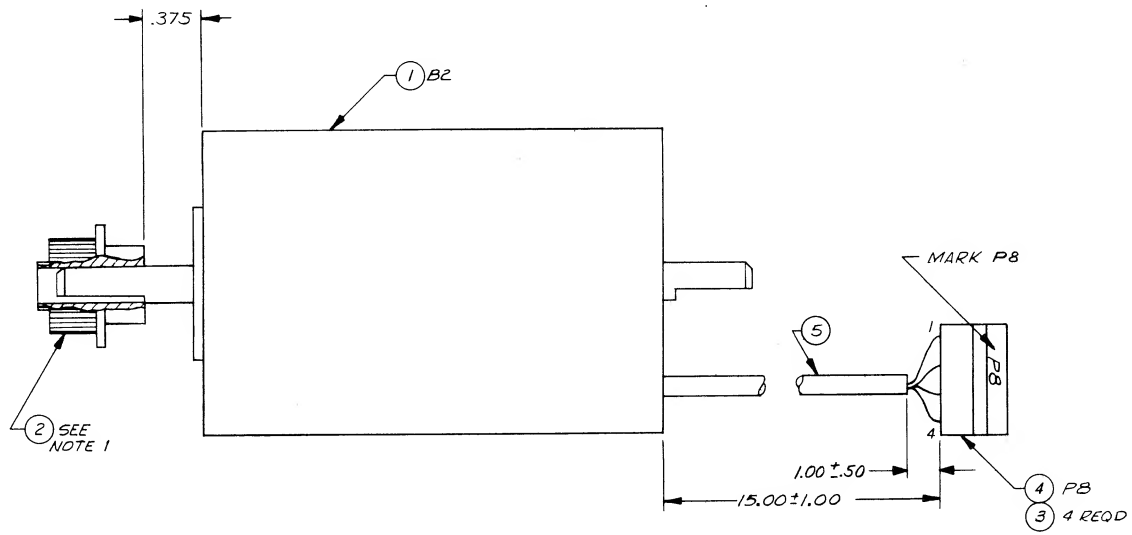

PART NUMBER 959400-0001 REV C DESCRIPTION..... PAPER MOTOR ASSY

ITEM.	QUANTITY.	COMPONENT..	DESCRIPTION.....	UM
0001	00001.000	959334-0001	MOTOR,STEPPING DRIVE	EA
0001A			B2	
0002	00001.000	959284-0001	PULLEY,24 TOOTH	EA
0003	00004.000	231553-0008	CONTACT P.C. BD. AMP-61668-1	EA
0004	00001.000	231220-0102	CONNECTOR P.C. BOARD EDGE 4CKT AMP-480519-4	EA
0004A			P8 AMP-480519-4	
0005	00001.200	236316-0000	TUBING #6 .166 ID BLK. PLASTIC HYFLEX IRV-#6	FT

-0002	-0001	ITEM NO.	UNIT OF ISSUE	DWG SIZE	PART NUMBER	DESCRIPTION	VENDOR PART NUMBER
QTY REQD						LIST OF MATERIALS	

UNLESS OTHERWISE SPECIFIED
DECIMAL .XX ± .02 .XXX ± .010
FRACTIONAL ±1/64 ANGULAR ± 1°
CONCENTRICITY MACHINED DIAMETERS .004 TIR
ALL DIMENSIONS TO BE MET BEFORE PLATING
REMOVE ALL BURRS AND SHARP EDGES
DO NOT SCALE THIS DRAWING
ALL DIMENSIONS IN INCHES
SURFACES MARKED ✓ TO HAVE ✓
DRILLED HOLE TOLERANCES
.013 TO .136 ± .003 / −.002 .136 TO .250 ± .005 / −.003
.250 AND ABOVE ± .005

PROCESSES
1. HOT STAMP F-100, HEIGHT .12, COLOR WHITE

PROJ NO.	SIZE	NEXT ASSY DWG NO.
8726	E	959391

DRAFTSMAN 11/9/71 N. Purcell
CKD—DRAFTSMAN 5/2
DESIGN ENGINEER 5/2/72
APPD—ENGINEER 5/2/72
APPD—MFG. 5/2/72

TEXAS INSTRUMENTS INCORPORATED
INDUSTRIAL PRODUCTS DIVISION
HOUSTON, TEXAS

TITLE PAPER MOTOR ASSY,
UNIT DRIVE MECHANISM
SYSTEM 700 ASR
SCALE 2/1 C 959400 REV C

LM FILMED

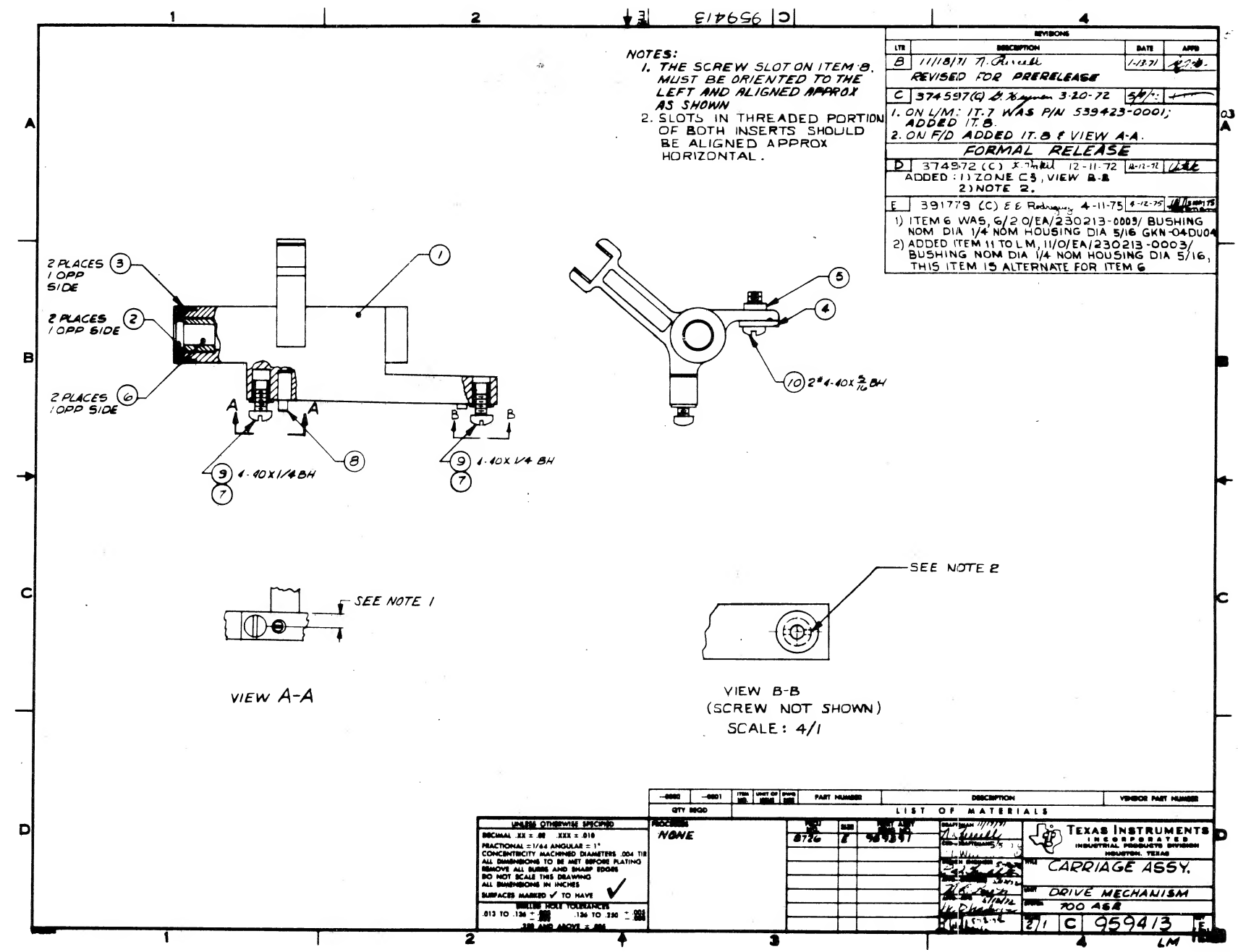

NOTES:
1. THE SCREW SLOT ON ITEM 8, MUST BE ORIENTED TO THE LEFT AND ALIGNED APPROX AS SHOWN
2. SLOTS IN THREADED PORTION OF BOTH INSERTS SHOULD BE ALIGNED APPROX HORIZONTAL.
REVISIONS
LTR | DESCRIPTION | DATE | APPD
B | 11/18/71 N. Russell | 1-13-71
REVISED FOR PRERELEASE
C | 374597(C) G. Heynen 3-20-72
1. ON L/M: IT.7 WAS P/N 539423-0001; ADDED IT.8.
2. ON F/D ADDED IT.8 & VIEW A-A.
FORMAL RELEASE
D | 374572 (C) 12-11-72 | 12-12-72
ADDED: 1) ZONE C3, VIEW B-B
2) NOTE 2.
E | 391779 (C) E E Rodriguez 4-11-75 | 4-12-75
1) ITEM 6 WAS, 6/2 O/EA/230213-0003/ BUSHING NOM DIA 1/4 NOM HOUSING DIA 5/16 GKN-04DU04
2) ADDED ITEM 11 TO LM, 11/O/EA/230213-0003/ BUSHING NOM DIA 1/4 NOM HOUSING DIA 5/16, THIS ITEM IS ALTERNATE FOR ITEM 6
2 PLACES 1 OPP SIDE
2 PLACES 1 OPP SIDE
2 PLACES 1 OPP SIDE
4-40X1/4BH
4-40X1/4 BH
2#4-40X5/16 BH
SEE NOTE 1
VIEW A-A
SEE NOTE 2
VIEW B-B
(SCREW NOT SHOWN)
SCALE: 4/1
LIST OF MATERIALS
PART NUMBER
DESCRIPTION
VENDOR PART NUMBER
QTY REQD
UNLESS OTHERWISE SPECIFIED
DECIMAL .XX ± .02 .XXX ± .010
FRACTIONAL ± 1/64 ANGULAR ± 1°
CONCENTRICITY MACHINED DIAMETERS .004 TIR
ALL DIMENSIONS TO BE MET BEFORE PLATING
REMOVE ALL BURRS AND SHARP EDGES
DO NOT SCALE THIS DRAWING
ALL DIMENSIONS IN INCHES
SURFACES MARKED ✓ TO HAVE
DRILLED HOLE TOLERANCES
PROCESSES
NONE
8726
TEXAS INSTRUMENTS INCORPORATED
INDUSTRIAL PRODUCTS DIVISION
HOUSTON, TEXAS
CARRIAGE ASSY.
DRIVE MECHANISM
700 ASR
2/1
C
959413
LM

PART NUMBER	REV	DESCRIPTION.....
959413-0001	E	CARRIAGE ASSY

ITEM.	QUANTITY.	COMPONENT..	DESCRIPTION.....		UM
0001	00001.000	959258-0001	CARRIAGE,HEAD		EA
0002	00002.000	215416-0001	WIPERS-FELT 1207-5416-000		EA
0003	00002.000	215417-0001	HOLDER-WIPER 1210-5417-043	01+00+04	EA
0004	00001.000	959299-0001	CLAMP,DRIVE CABLE 1209-9299-008		EA
0005	00001.000	960935-0001	NUT STRIP 1209-0935-013		EA
0006	00002.000	972405-0197	BEARING,SLEEVE,BRONZE OIL-IMPREGNATED SEE- TI DRAWING		EA
0007	00002.000	539423-0002	INSERT SCREW THREAD KNURL #4-40 BRASS BAN-N42B188-4-40		EA
0008	00001.000	959312-0001	PIN,HEAD ADJUST 1209-9312-016		EA
0009	00002.000	418293-0013	SCREW 4-40 UNC-2A X .250 PAN HEAD CRES QPL- MS1957-13		EA
0010	00002.000	418293-0014	SCREW 4-40 UNC-2A X .312 PAN HEAD CRES QPL- MS1957-14		EA
0011	00000.000	230213-0003	BUSHING NOM DIA.1/4 NOM HOUSING DIA 5/16 GKN-04DU04		EA
0011A			THIS ITEM MAY BE USED AS AN GKN-04DU04		
0011B			ALTERNATE FOR ITEM 6 GKN-04DU04		

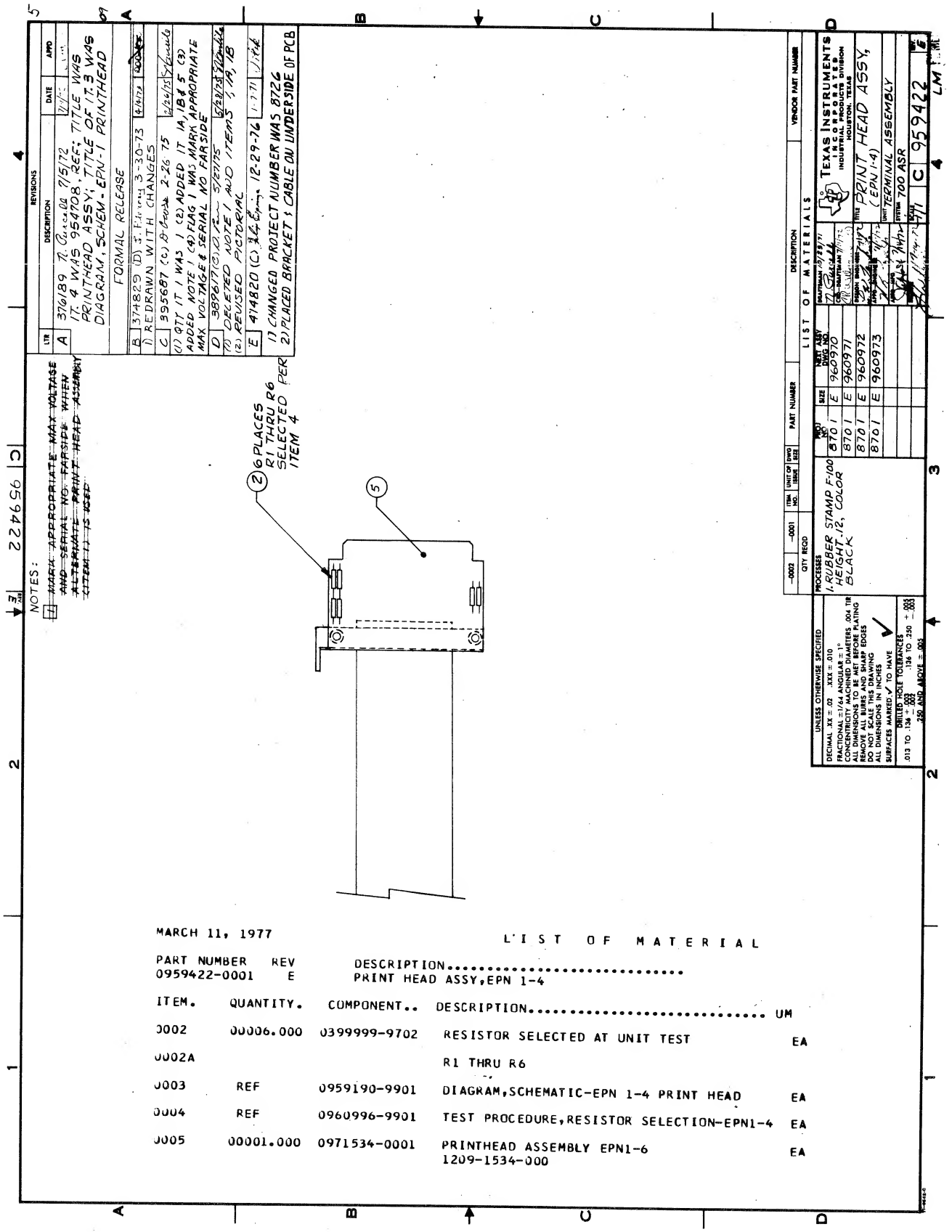

MARCH 11, 1977

L I S T O F M A T E R I A L

PART NUMBER REV
0959422-0001 E

DESCRIPTION.....
PRINT HEAD ASSY,EPN 1-4

ITEM.	QUANTITY.	COMPONENT..	DESCRIPTION.....	UM
0002	00006.000	0399999-9702	RESISTOR SELECTED AT UNIT TEST	EA
0002A			R1 THRU R6	
0003	REF	0959190-9901	DIAGRAM,SCHEMATIC-EPN 1-4 PRINT HEAD	EA
0004	REF	0960996-9901	TEST PROCEDURE,RESISTOR SELECTION-EPN1-4	EA
0005	00001.000	0971534-0001	PRINTHEAD ASSEMBLY EPN1-6 1209-1534-000	EA

960331 a

WIRE NO	DESCRIPTION	START STATION	FINISH STATION	REMARKS	ITEM NO
1	CABLE ASSY (HEAD)	P1-3	HEAD-4	BLK	56
2	CABLE ASSY (HEAD)	-EAD-2	HEAD-3	-HIELD	56
3	CABLE ASSY (HEAD)	P1-1	HEAD-2	SHIELD	56
4	CABLE ASSY (HEAD)	P1-2	HEAD-1	WHT	56
5	CABLE ASSY, SWITCH (P2)	P2-3	S2-NC	RED/WHT	72
6	CABLE ASSY, SWITCH (P2)	P2-2	S2-NO	WHT/BRN	72
7	CABLE ASSY, SWITCH (P2)	P2-1	S2-COM	WHT/BLK	72
8	CABLE ASSY, SWITCH (P12)	P12-3	S1-NC	WHT/RED	73
9	CABLE ASSY, SWITCH (P12)	P12-2	S1-NO	WHT/BRN	73
10	CABLE ASSY, SWITCH (P12)	P12-1	S1-COM	WHT/BLK	73
11	CABLE ASSY, SWITCH (P13)	P13-3	S3-NC	WHT/RED	74
12	CABLE ASSY, SWITCH (P13)	P13-2	S3-NO	WHT/BRN	74
13	CABLE ASSY SWITCH (P13)	P13-1	S3-COM	WHT/BLK	74

7 ADJUST LATCHES (ITEMS 29 & 30) TO HOLD DOOR (ITEM 2) CLOSED.

8 ADJUST LINKAGE ASSY 3 (ITEMS 6 & 7) FOR NO CLEARANCE BETWEEN CARRIAGE (ITEM 33) AND CHASSIS (ITEM 58) WITH THE DOOR (ITEM 2) CLOSED.
ADJUST SWITCH 81 TO ACTUATE WHILE CARRIAGE IS APPROACHING CHASSIS (ITEM 58) AT .015 ±.010 BEFORE CONTACT BETWEEN CARRIAGE AND CHASSIS.

9

10 TAPE HEAD (ITEM 35) WITH A GREEN DOT AS SHOWN IN VIEW J-J MUST BE WIRED ACCORDING TO PIN CONFIGURATION SHOWN IN VIEW C. TAPE HEAD WITHOUT A GREEN DOT MUST BE WIRED ACCORDING TO PIN CONFIGURATION SHOWN IN VIEW A.

NOTES:

1. ALL PLUG NO.S ASSEMBLED TO RELATED "J" NO.S ON PWB. WHT DOT INDICATES PIN NO 1 ON EACH CONNECTOR. WHT DOT IS ON TOP SIDE.
2. PUT LEADS IN CASTING CHANNEL. PLACE SLEEVING (ITEM 87) BETWEEN LEADS AND MOTOR. DO NOT ALLOW ANY PART OF ITEM 87 TO GET BETWEEN MOTOR AND ITS MOUNTING SURFACE.

3 ADJUST AND LOCK SOLENOID SO THAT, WITH CARRIAGE (ITEM 33) SEATED AGAINST THE CHASSIS (ITEM 58) STOP, A FORCE OF 12 OZ APPLIED TO THE TOP OF THE SOLENOID PLUNGER WILL MAINTAIN SEATING AND A FORCE OF 10 OZ. WILL ALLOW PLUNGER TO UNSEAT.
DISCARD ANY LOCK WASHER SUPPLIED WITH SOLENOID ASSY (ITEMS 71 OR 34).

4 ADJUST HEAD (ITEM 35) SO THAT, WITH CARRIAGE (ITEM 33) SEATED AGAINST CHASSIS (ITEM 58) STOP, THERE IS A CLEARANCE OF .020 ±.005 BETWEEN THE HEAD ASSY TAPE GUIDES AND THE GUIDE POSTS.

5 PLACE ITEM 88 (PLATE, ID, SERIAL NO.) ONTO THE INSIDE AND AT THE TOP OF THE DOOR.

6 POSITION SENSOR ASSY (ITEM 99) UP AGAINST BOTTOM EDGE OF CARRIAGE CASTING & CENTERED BETWEEN SIDEWALLS.

REVISIONS			
LTR	DESCRIPTION	DATE	APPD
U	CN 414835	5/4/72	
	DELETED ITEM 93 ON -0001 & -0002. WAS: P/N 962316-9901, QTY REF		
V	CN 423683 C.	7/5/72	
	ADD ITEM 99 TO REPLACE ITEM 80 (2) CHNG ITEM 80 TO BE ALT FOR ITEM 99		

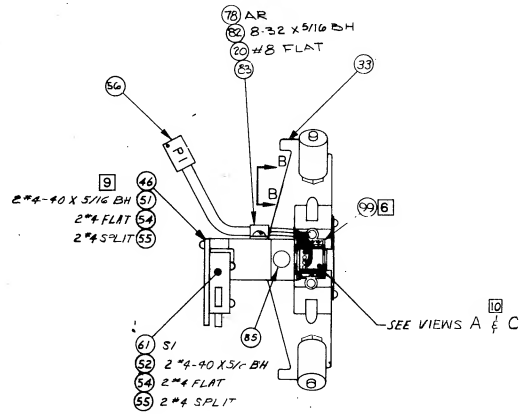

VIEW F-F (C-3)

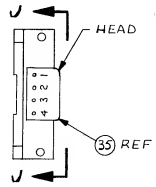

VIEW C 10
SCALE: NONE
GREEN DOT HEAD

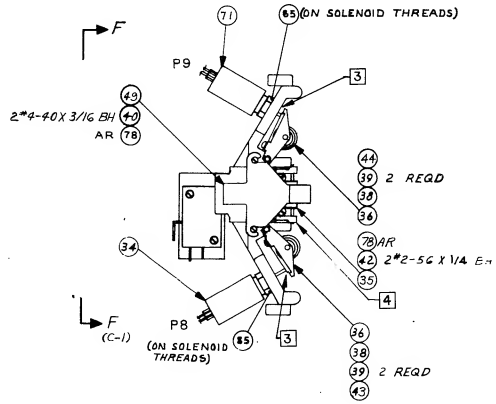

VIEW E
(SH 3, A-1)

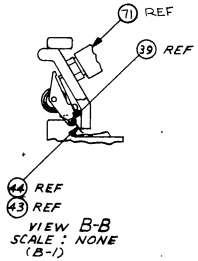

VIEW B-B
SCALE: NONE
(B-1)

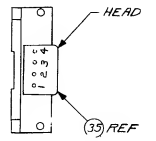

VIEW A 10
SCALE: NONE
NON-GREEN DOT HEAD

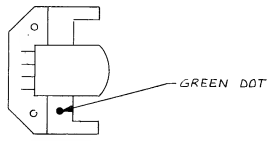

VIEW J-J 10
SCALE: NONE

REV STATUS OF SHEETS	REV	V		Y	
	SH	1	2	3	

MAG. TAPE XPORT ASSY (LED)	960331-0002
MAG. TAPE XPORT ASSY (LAMPS)	960331-0001
DESCRIPTION	PART NO

-0002 QTY REQD	-0001 QTY REQD	ITEM NO.	UNIT OF ISSUE	DWG SIZE	PART NUMBER	DESCRIPTION	VENDOR PART NUMBER
					LIST OF MATERIALS		

UNLESS OTHERWISE SPECIFIED
DECIMAL XX ± .02 XXX ± .010
FRACTIONAL ± 1/64 ANGULAR ± 1°
CONCENTRICITY MACHINED DIAMETERS .004 TIR
ALL DIMENSIONS TO BE MET BEFORE PLATING
REMOVE ALL BURRS AND SHARP EDGES
DO NOT SCALE THIS DRAWING
ALL DIMENSIONS IN INCHES
SURFACES MARKED ✓ TO HAVE
DRILLED HOLE TOLERANCES
.013 TO 136 ± .003 136 TO 250 ± .005
250 AND ABOVE ± .001

PROCESSES
NONE

PART NO.	SIZE	NEXT ASSY DWG NO.
8726	D	960374
8726	D	960376
8726	A	986461

DRAFTSMAN		4/18/72
ENGINEER		
QUALITY		
MFG		
PROJECT ENGR		

TEXAS INSTRUMENTS INCORPORATED
INDUSTRIAL PRODUCTS DIVISION
HOUSTON, TEXAS

TITLE MAGNETIC TAPE TRANSPORT ASSY
CASSETTE TRANSPORT
SYSTEM 700 ASR
SIZE D
960331

FILMED

SH 1 OF 3 LM

B-71

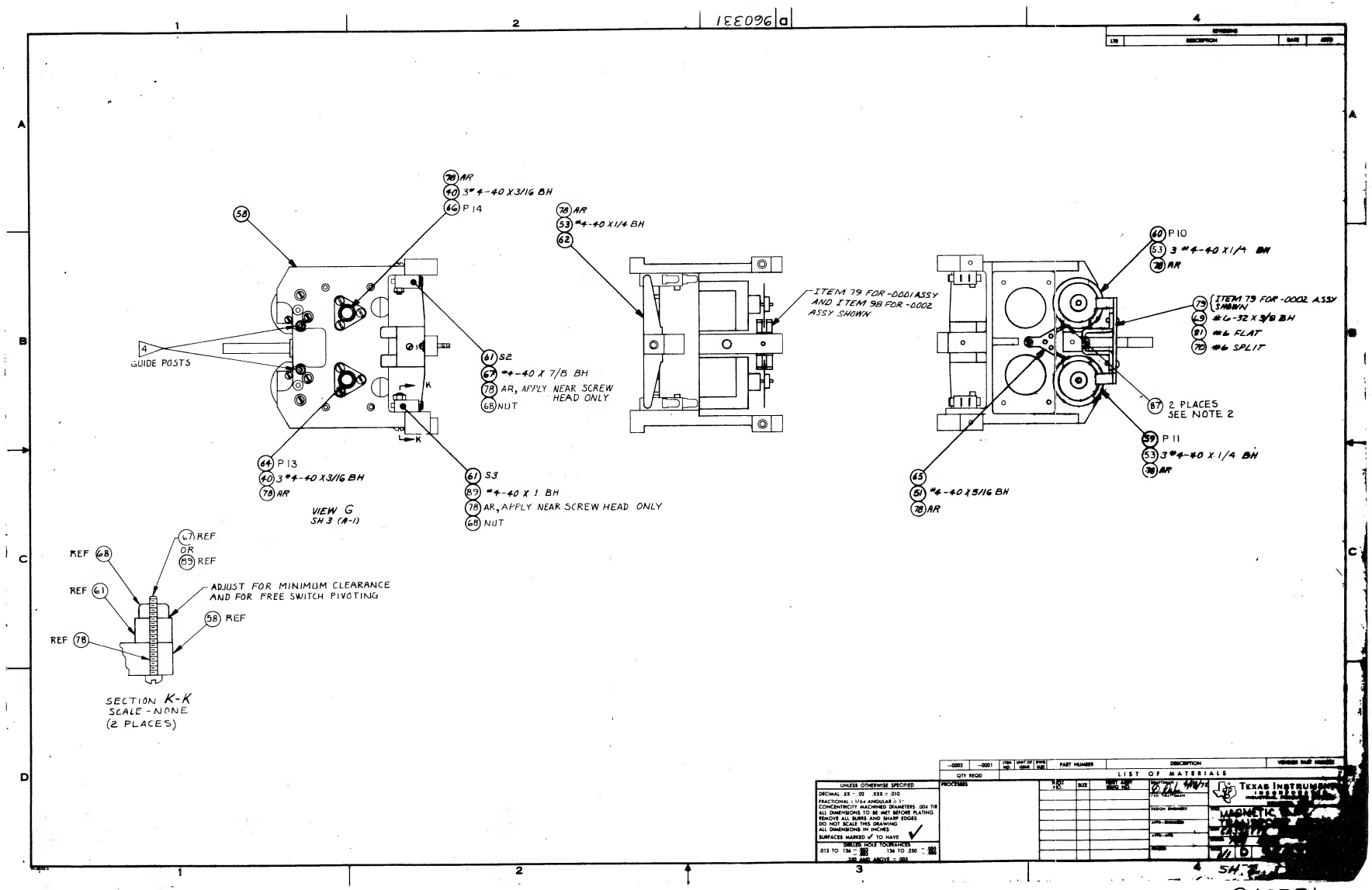

960331
58
78 AR
40 3 #4-40 X 3/16 BH
66 P14
78 AR
53 #4-40 X 1/4 BH
62
ITEM 79 FOR -0001 ASSY AND ITEM 98 FOR -0002 ASSY SHOWN
60 P10
53 3 #4-40 X 1/4 BH
78 AR
79 ITEM 79 FOR -0002 ASSY SHOWN
69 #6-32 X 3/8 BH
81 #6 FLAT
70 #6 SPLIT
4 GUIDE POSTS
61 S2
67 #4-40 X 7/8 BH
78 AR, APPLY NEAR SCREW HEAD ONLY
68 NUT
87 2 PLACES SEE NOTE 2
59 P11
53 3 #4-40 X 1/4 BH
78 AR
64 P13
40 3 #4-40 X 3/16 BH
78 AR
VIEW G
SH 3 (A-1)
61 S3
89 #4-40 X 1 BH
78 AR, APPLY NEAR SCREW HEAD ONLY
68 NUT
65
51 #4-40 X 5/16 BH
78 AR
REF 68
67 REF OR 89 REF
REF 61
ADJUST FOR MINIMUM CLEARANCE AND FOR FREE SWITCH PIVOTING
58 REF
REF 78
SECTION K-K
SCALE - NONE
(2 PLACES)
LIST OF MATERIALS
TEXAS INSTRUMENTS
MAGNETIC TRANSFER
SH 2

960331

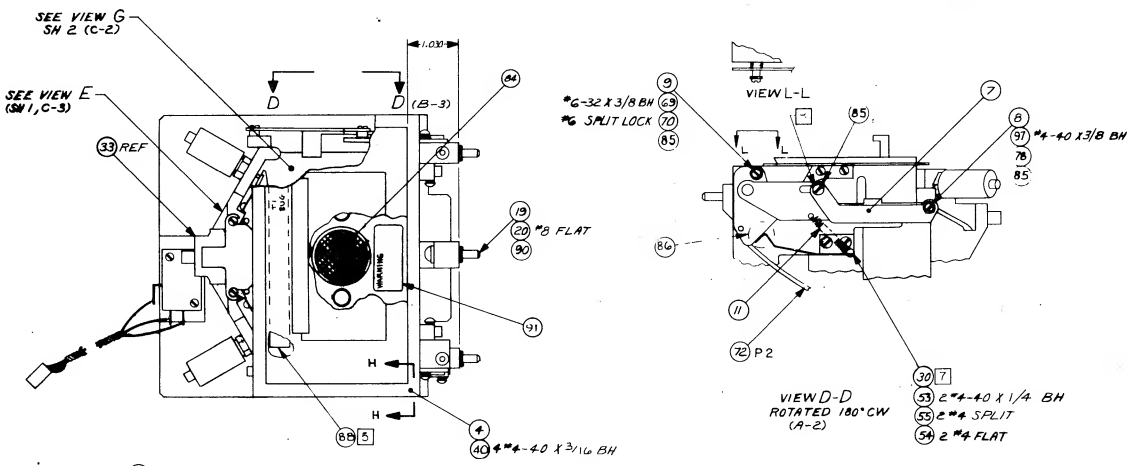

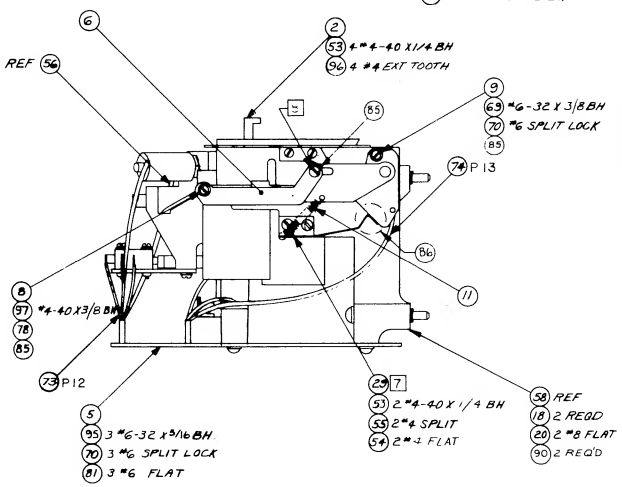

PLUG IDENTIFICATION CHART FOR REF ONLY				
ITEM	PLUG NO	DESCRIPTION	PLUG PART NO AND ITEM NO	
			960331-0001	960331-0002
35	P1	HEAD ASSY	960062-0001, IT. 56	960062-0001, IT. 56
61	P2	WRITE TAB SW	960060-0001, IT. 72	960060-0001, IT. 72
79	P3	TACH ASSY	960073-0001, IT. 79	960073-0002, IT. 79
79	P4	TACH ASSY	960073-0001, IT. 79	960073-0002, IT. 79
99	P5	TAPE SENSOR	960077-0002, IT. 99	960077-0002, IT. 99
99	P6	TAPE SENSOR	960077-0002, IT. 99	960077-0002, IT. 99
65	P7	LAMP ASSY	960044-0001, IT. 65	960044-0002, IT. 65
34	P8	SOLENOID ASSY	960042-0001, IT. 34	960042-0001, IT. 34
71	P9	SOLENOID ASSY	960042-0002, IT. 71	960042-0002, IT. 71
60	P10	CAPSTAN MOTOR ASSY	960076-0002, IT. 60	960076-0002, IT. 60
59	P11	CAPSTAN MOTOR ASSY	960076-0001, IT. 59	960076-0001, IT. 59
61	P13	CAS-IN-PLACE SW	960060-0003, IT. 74	960060-0003, IT. 74
61	P12	DOOR SW	960060-0002, IT. 73	960060-0002, IT. 73
66	P14	REEL MOTOR ASSY	960075-0002, IT. 66	960075-0002, IT. 66
64	P15	REEL MOTOR ASSY	960075-0001, IT. 64	960075-0001, IT. 64

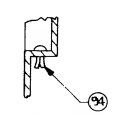

SECTION H-H
2 PLACES
SCALE: NONE

REVISIONS

LTR	DESCRIPTION	DATE	APPD

-0002	-0001	ITEM NO	UNIT OF ISSUE	DWG SIZE	PART NUMBER	DESCRIPTION	VENDOR PART NUMBER
QTY REQD							

LIST OF MATERIALS

UNLESS OTHERWISE SPECIFIED
DECIMAL XX ± .02 XXX ± .010
FRACTIONAL ± 1/64 ANGULAR ± 1
CONCENTRICITY MACHINED DIAMETERS .004 TIR
ALL DIMENSIONS TO BE MET BEFORE PLATING
REMOVE ALL BURRS AND SHARP EDGES
DO NOT SCALE THIS DRAWING
ALL DIMENSIONS IN INCHES
SURFACES MARKED ✓ TO HAVE
DRILLED HOLE TOLERANCES
.013 TO .136 ± .003 .136 TO .250 ± .005 .003
.250 AND ABOVE ± .005

PROCESSES

PROJ NO. | SIZE | NEXT ASSY DWG NO.

DRAFTSMAN: [signature] 4/18/72
CHK-DRAFTSMAN
DESIGN ENGINEER
APPD-ENGINEER
APPD-MFG
RELEASE

TEXAS INSTRUMENTS INCORPORATED
INDUSTRIAL PRODUCTS DIVISION
HOUSTON, TEXAS

TITLE MAGNETIC TAPE TRANSPORT ASSY.
UNIT CASSETTE TRANSPORT
SYSTEM 700 ASR
SCALE 1/1 D 960331-0001

SH 3

PART NUMBER	REV	DESCRIPTION
0960331-0001	V	MAGNETIC TAPE TRANSPORT ASSY (LAMPS)
0960331-0002	V	MAGNETIC TAPE TRANSPORT ASSY (LED)

ITEM.	QUANTITY.	COMPONENT..	DESCRIPTION	UM
0002	00001.000	0960378-0001	COVR ASSY,TRANSPORT 1209-0378-022	EA
0004	00001.000	0960067-0001	BEZEL,MOLDED	EA
0005	00001.000	0960080-0002	CASSETTE TRANSPORT,PWB ASSY (LED) 1210-1320-026	EA
0006	00001.000	0960342-0001	LINKAGE ASSY,(LEFT) 1209-0342-033	EA
0007	00001.000	0960342-0002	LINKAGE ASSY,(RIGHT) 1209-1512-033	EA
0008	00002.000	0960423-0001	BUSHING,LINK UPPER 1209-0423-022	EA
0009	00002.000	0960346-0001	BUSHING,PIVOT 1209-0346-023	EA
0011	00002.000	0960048-0001	SPRING,EJECTOR	EA
0018	00002.000	0972988-0051	SCREW 8-32 X 1.50 PAN HEAD CRES	EA
0019	00001.000	0972988-0048	SCREW 8-32 X .875 PAN HEAD CRES	EA
0020	00004.000	0416622-0024	WASHER #8 FLAT QPL - A-S600 8L	EA
0021	REF	0986357-9901	DIAGRAM LOGIC,CASSETTE TRANSPORT (LED)	EA
0025	REF	0960333-9901	SPECIFICATION	EA
0026	REF	0960332-9901	SPECIFICATION	EA
0029	00001.000	0960429-0001	LEFT HAND LATCH 1209-0429-022	EA
0030	00001.000	0960429-0002	RIGHT HAND LATCH 1209-1026-019	EA
0033	00001.000	0960401-0001	CARRIAGE,MACHINED 1209-0401-068	EA
0034	00001.000	0960042-0001	SOLENOID,ASSY (P8) 1209-0042-093	EA
0035	00001.000	0960340-0001	HEAD,MOUNT ASSY	EA
0036	00002.000	0960347-0001	PINCH ROLLER ASSY 1209-0347-033	EA
0038	00002.000	0960348-0001	SHAFT,PINCH ROLLER PIVOT 1209-0348-025	EA
0039	00004.000	0416402-4009	RING RETAINING EXTERNAL E MIL - MS-6633-4009	EA
0040	00012.000	0972988-0012	SCREW 4-40 X .188 PAN HEAD CRES	EA
0042	00002.000	0972988-0003	SCREW 2-56 X .250 PAN HEAD CRES	EA
0043	00001.000	0960355-0001	SPRING PINCH ROLLER SUPPORT	EA
0044	00001.000	0960355-0002	SPRING PINCH ROLLER SUPPORT	EA
0046	00001.000	0960402-0001	BRACKET SWITCH 1209-0402-019	EA
0049	00001.000	0960054-0001	SPRING,SEATING 1209-0054-018	EA
0051	00003.000	0972988-0014	SCREW 4-40 X .312 PAN HEAD CRES	EA
0052	00002.000	0972988-0018	SCREW 4-40 X .625 PAN HEAD CRES	EA
0053	00015.000	0972988-0013	SCREW 4-40 X .250 PAN HEAD CRES	EA
0054	00008.000	0411027-0803	WASHER .125 X .250 X .022 FLAT CRES QPL - M-15795-803	EA
0055	00008.000	0418431-0024	LOCKWASHER # 4 SPLIT,HELICAL CRES QPL - N-S1676-04	EA
0056	00001.000	0960062-0001	CABLE ASSY,(HEAD) 1209-0062-054	EA
0058	00001.000	0960379-0001	TRANSPORT CHASSIS SUBASSY 1209-0379-058	EA
0059	00001.000	0960076-0001	CAPSTAN MOTOR ASSY (P11) 1209-0076-032	EA
0060	00001.000	0960076-0002	CAPSTAN MOTOR ASSY (P10) 1209-1519-026	EA
0061	00003.000	0772235-0001	SWITCH,SENSITIVE 0.1 AMP 125 VAC SEE - T- DRAWING	EA
0061A			S1 S2 S3 SEE - T- DRAWING	
0062	00001.000	0960039-0001	SPRING,RETAINING 1209-0039-021	EA

PART NUMBER	REV	DESCRIPTION.....
0960331-0001	V	MAGNETIC TAPE TRANSPORT ASSY (LAMPS)

ITEM.	QUANTITY.	COMPONENT..	DESCRIPTION.....	UM
0064	00001.000	0960075-0001	REEL MOTOR ASSY (P15) 1209-0075-034	EA
0065	00001.000 for-0001	0960044-0001	LAMP ASSY 1209-0044-034	EA
0065	00001.000 for-0002	0960044-0002	LAMP ASSEMBLY CASSETTE TRANSPORT 700 ASR	EA
0066	00001.000	0960075-0002	REEL MOTOR ASSY (P14) 1209-1509-034	EA
0067	00001.000	0972988-0020	SCREW 4-40 X .875 PAN HEAD CRES	EA
0068	00002.000	0232450-0000	NUT 4-40 FIBER LOCK ESN - 79-M-4-40	EA
0069	00003.000	0972988-0028	SCREW 6-32 X .375 PAN HEAD CRES	EA
0070	00006.000	0411104-0136	WASHER #6 LOCKSPLIT QPL - M-35338-136	EA
0071	00001.000	0960042-0002	SOLENOID ASSY (P9) 1209-1508-088	EA
0072	00001.000	0960060-0001	CABLE ASSY,SWITCH (P2) 1209-0060-030	EA
0073	00001.000	0960060-0002	CABLE ASSY,SWITCH (P12) 1209-1510-031	EA
0074	00001.000	0960060-0003	CABLE ASSY,SWITCH (P13) 1209-1511-033	EA
0078	AR	0235182-0002	LOCTITE SEALENT GRADE 242 LOC - -2-2	EA
0079	00001.000 for-0001	0960073-0001	TACH SENSOR ASSY 1209-0073-037	EA
0079	00001.000 for-0002	0986361-0001	HOUSING ASSY,TACH SENSOR 1205-6361-021	EA
0080	00000.000	0960077-0001	TAPE SENSOR ASSY 1209-0077-034	EA
0080A			ITEM 8C MAY BE USED AS 1209-0077-034	
0080B			ALTERNATE FOR ITEM 99 1209-0077-034	
0081	00004.000	0416622-0013	WASHER #6 FLAT QPL - A-960061	EA
0082	00001.000	0972988-0042	SCREW 8-32 X .312 PAN HEAD CRES	EA
0083	00001.000	0054967-0002	CLAMP LOOP .1 DIA. BUR - HP-2N	EA
0084	00001.000	0960343-0001	REFLECTOR,BEZEL-CASSETTE XPORT	EA
0085	AR	0232573-0001	OIL #42 TERRESTIC HUM - -	EA
0086	AR	0231995-0006	GREASE DARINA #1 OR AX - SHELL OIL	EA
0087	00002.000	0971405-0001	SLEEVE 1209-1405-017	EA
0088	00001.000	0960140-0001	PLATE,IDENTIFICATION-SERIAL NO.TRANSPORT	EA
0089	00001.000	0972988-0021	SCREW 4-40 X 1.00 PAN HEAD CRES	EA
0090	00003.000	0537531-0006	PACKING,PREFORMED O-RING	EA
0091	00001.000	0971414-0001	LABEL,CLEANING PROCEDURE 1209-1414-000	EA
0092	REF	0962315-9901	TEST PROC,UNIT CASSETTE TRANSPORT	EA
0094	00002.000	0972371-0001	FASTNER,SNAP-IN,PLUG-PLASTIC	EA
0095	00003.000	0972988-0027	SCREW 6-32 X .312 PAN HEAD CRES	EA
0096	00004.000	0411101-0057	LOCKWASHER # 4 EXTERNAL TOOTH CRES QPL - M-35335-57	EA
0097	00002.000	0972988-0015	SCREW 4-40 X .375 PAN HEAD CRES	EA
0099	00001.000	0960077-0002	TAPE SENSOR ASSY	EA
0099A			USE -2 TAPE SENSOR ONLY	
0099B			ON XPORTS USING ITEM 5	
0099C			(PWB ASSY) OF REV Y OR	
0099D			LATER	

NOTES:
~~1. INSTALL ITEM 8 ON ITEM 1 AS SHOWN - 2 PLACES.~~
2. ASSEMBLE ITEMS 2 & 3
3. RIVET ITEM 1 TO ITEM 3 & RE-ADJUST ASSEMBLY.

REVISIONS				
ZONE	LTR	DESCRIPTION	DATE	APPROVED
	A	389979 (D) F. Espinoza 1-27-76 DN LM: 1) DELETED ITEM 4. P/N WAS 418293-14 2) CHANGED ITEM 5 AND 6 QTY WAS 4. 3) ADDED ITEM 8 AND 9. 4) ADDED NOTES 2 & 3. 5) CHANGED NOTE 1 WAS "△1 INSTALL ITEM 3 (BRACKET) TO ITEM 2 (DISPLAY PANEL) BEFORE INSTALLING ITEM 1 (OPTIONAL PANEL DISPLAY)" REDESIGNED DWG PER LM CHANGES.	1-27-76	
	B	CN 424034 J. Pierce (1) DELE ITEM 8 WAS QTY OF 2, PN 230205-0007 (2) DELE NOTE 1 (3) REVISED PART OF ITEM 1 TO AGREE W/ PART		

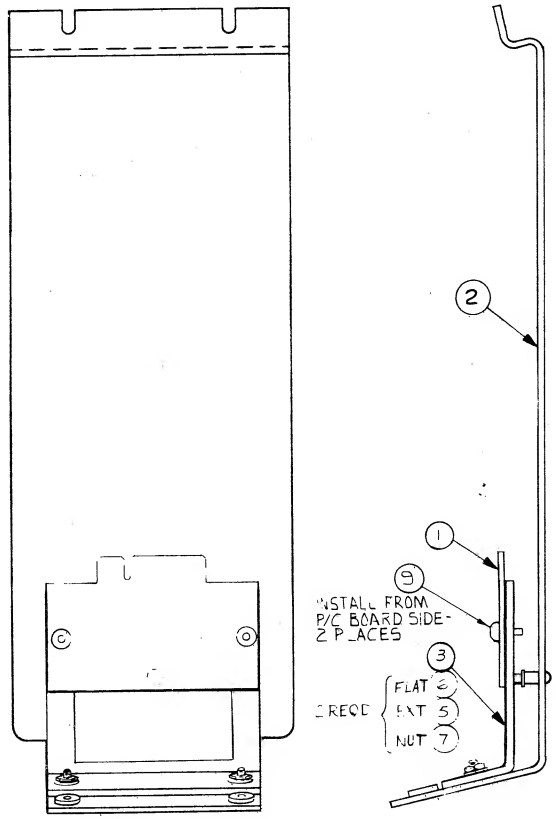

·2 QTY REQD	·1	ITEM NO	CODE IDENT	PART OR IDENTIFYING NUMBER	NOMENCLATURE OR DESCRIPTION	PROCUREMENT SPECIFICATION
				PARTS LIST		

UNLESS OTHERWISE SPECIFIED
- REMOVE ALL BURRS AND SHARP EDGES
- CONCENTRICITY MACHINED DIAMETERS .010 FIR
- DIMENSIONAL LIMITS APPLY BEFORE FINISH PROCESSING
- IDENTIFYING NUMBERS SHOWN IN PARENTHESES FOR REFERENCE ONLY
- INTERPRET DRAWING IN ACCORDANCE WITH MIL-STD-100

HOLE TOLERANCE

.013 THRU .125 ± .004 ± .001	.126 THRU .250 ± .005 ± .001	.251 THRU .500 ± .006 ± .001
.501 THRU .750 ± .008 ± .001	.751 THRU 1.000 ± .010 ± .001	1.001 THRU 2.000 ± .012 ± .001

NEXT ASSY	USED ON
960984	8726
APPLICATION	

UNLESS OTHERWISE SPECIFIED
- DIMENSIONS ARE IN INCHES
- TOLERANCES: ANGLES ± 1° 3 PLACE DECIMALS ± .010 2 PLACE DECIMALS ± .02

MATERIAL:

	DATE
DWN	2-8-73
CHK	3/12/73
ENGR	
QA	
APVD	
CONTR NO	
DESIGN ACTIVITY RELEASE	

TEXAS INSTRUMENTS INCORPORATED
Equipment Group Dallas, Texas

PANEL ASSY, AUTO ANSWER DISPLAY

SIZE	CODE IDENT NO	DRAWING NO
C	96214	960983

SCALE NONE SHEET

LM

OCTOBER 14, 1977 LIST OF MATERIAL

PART NUMBER	REV	DESCRIPTION
0960983-0001	B	AUTO ANSWER DISPLAY PANEL ASSEMBLY

ITEM.	QUANTITY.	COMPONENT..	DESCRIPTION	UM
0001	00001.000	0960165-0001	OPTION PANEL DISPLAY-AUTO ANSWER 1210-0165-000	EA
0002	00001.000	0971526-0001	PANEL,AUTO ANSWER DISPLAY 1209-1041-009	EA
0003	00001.000	0971525-0001	BRACKET,AUTO ANSWER DISPLAY 1209-1040-013	EA
0005	00002.000	0411101-0057	LOCKWASHER # 4 EXTERNAL TOOTH CRES QPL - MS35335-57	EA
0006	00002.000	0416622-0011	WASHER #4 FLAT QPL - AN960C4L	EA
0007	00002.000	0411115-0044	NUT,4-40 HEXAGON CRES STEEL MS -35649-244	EA
0009	00002.000	0972446-0008	RIVET,.126 DIA 1/4 LG DOME HD ALUM -1125-0408	EA

NOTES:

1. BOTTOM EDGE OF TRANSDUCER ASSY (ITEM 2) SHOULD BE FLUSH WITH BOTTOM EDGE OF PANEL (ITEM 1).

ZONE	LTR	DESCRIPTION	DATE	APPROVED
B6	A	386155 (C) J Pierce 9-10-74 1) REVERSED CABLE EXIT FROM ASSY		
		FORMAL RELEASE		

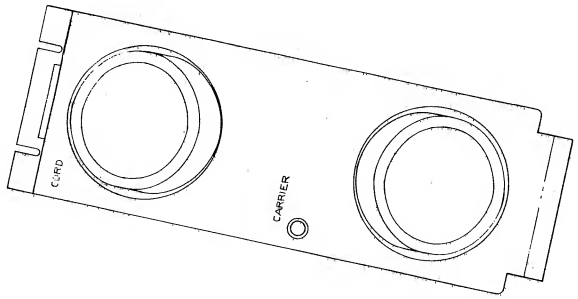

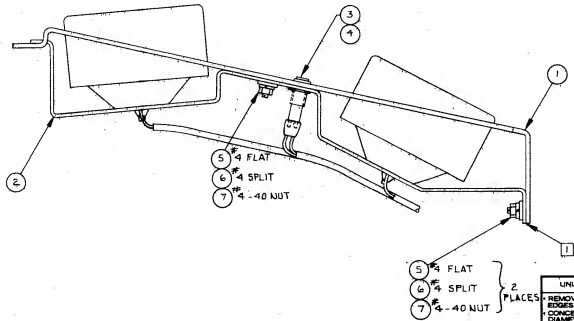

-2 QTY REQD	-1 QTY REQD	ITEM NO.	CODE IDENT	PART OR IDENTIFYING NUMBER	NOMENCLATURE OR DESCRIPTION	PROCUREMENT SPECIFICATION

PARTS LIST

UNLESS OTHERWISE SPECIFIED
- REMOVE ALL BURRS AND SHARP EDGES
- CONCENTRICITY MACHINED DIAMETERS .010 FIR
- DIMENSIONAL LIMITS APPLY BEFORE FINISH PROCESSING
- IDENTIFYING NUMBERS SHOWN IN PARENTHESES FOR REFERENCE ONLY
- INTERPRET DRAWING IN ACCORDANCE WITH MIL-STD-100

HOLE TOLERANCE

.013 THRU .128	+.001 −.001	120 THRU .390	+.003 −.001	281 THRU .500	+.005 −.001
.501 THRU .780	+.008 −.001	.781 THRU 1.000	+.010 −.001	1.001 THRU 2.000	+.012 −.001

96919	8726
NEXT ASSY	USED ON
APPLICATION	

UNLESS OTHERWISE SPECIFIED
- DIMENSIONS ARE IN INCHES
- TOLERANCES ANGLES ±1° 3 PLACE DECIMALS ±.010 2 PLACE DECIMALS ±.02

MATERIAL:

DWN J Pierce 12-11-73 DATE
CHK [signature] 11/7/74
ENGR [signature] 11/7/74
QA
APVD [signature] 11/7/74
CONTR NO
DESIGN AUTHORITY RELEASE [signature] 11/24/74

TEXAS INSTRUMENTS INCORPORATED Equipment Group Dallas, Texas

PANEL ASSEMBLY, ACOUSTIC COUPLER OPTION MODEL 733

SIZE	CODE IDENT NO	DRAWING NO
D	96214	969620

SCALE 1/1 | REV A | SHEET

LM

TI-7914E P4

969620

PART NUMBER	REV	DESCRIPTION
969620-0001	A	PANEL ASSY,ACOUSTIC COUPLER OPT MOD 733

ITEM.	QUANTITY.	COMPONENT..	DESCRIPTION	UM
0001	00001.000	973222-0001	PANEL ACST COUPLER OPTION-MOD 733 1209-3222-008	EA
0002	00001.000	974065-0002	OEM ACOUSTIC COUPLER,MOD 733-XDCR ASSY	EA
0003	00001.000	232245-0505	LAMP FLUSH 14V.08A CART/LENS CAP GREEN DRA-14-507 GREEN	EA
0004	00001.000	231845-7507	FASTENER FOR CARTRIDGE LAMP DRA-763	EA
0005	00003.000	411027-0804	WASHER .125 X .312 X .032 FLAT CRES QPL- MS15795-804	EA
0006	00003.000	418431-0024	LOCKWASHER # 4 SPLIT,HELICAL CRES QPL- NAS1676-C4	EA
0007	00003.000	411115-0044	NUT,4-40 HEXAGON CRES STEEL MS -35649-244	EA

NOTES:

1. WHEN INSTALLING BAFFLE (ITEM 4) ANY GRILL LINES SHOULD BE PERPENDICULAR TO THE PANEL (ITEM 1) LONG SIDES.
2. SPEAKER LEADS MAY BE INTERCHANGED & SHELL BE TWISTED 1 TURN/1 INCH MIN.
3. CABLES TO MICROPHONE & SPEAKER SHOULD RETAIN 1.5 INCH SERVICE LOOP

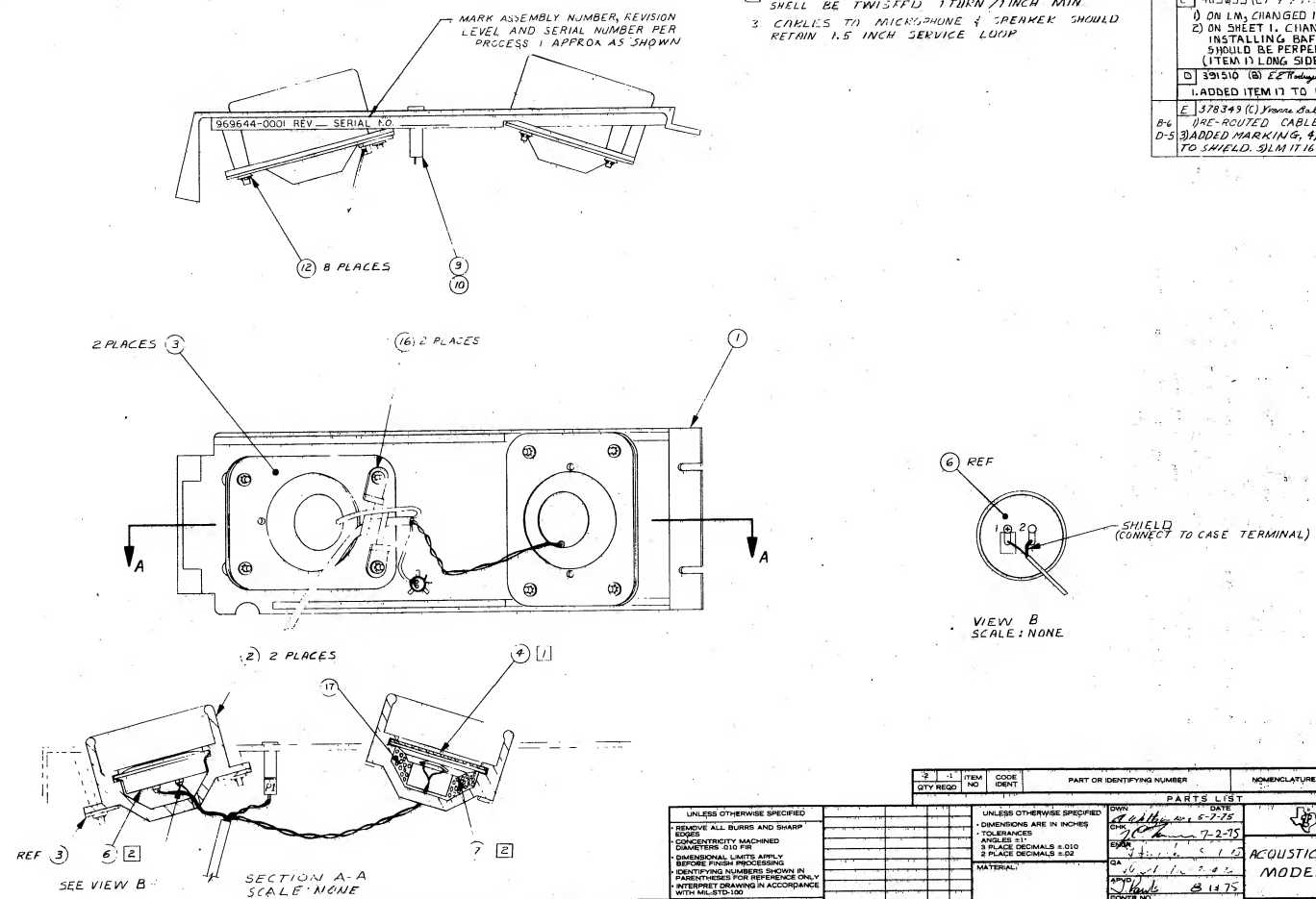

ZONE	LTR	DESCRIPTION	DATE	APPROVED
	A	REWROTE LM		
	B	402133 ADDED IT 16		
		FORMAL RELEASE		
	C	409653 (C) 7 5 ... 10-20-75		
		1) ON LM, CHANGED ITEM 4 P/N WAS 973238-0000 2) ON SHEET 1, CHANGED NOTE 1 WAS "WHEN INSTALLING BAFFLE (ITEM 4) THE GRILL LINES SHOULD BE PERPENDICULAR TO THE PANEL (ITEM 1) LONG SIDE."		
	D	391510 (B) EE Rodriguez 11-21-75	11/25/75	
		1. ADDED ITEM 17 TO F/D AND LM		
	E	378349 (C) Yvonne Bales 2-14-76	2-14-76	
B-6		1) RE-ROUTED CABLES. 2) ADDED PROCESS 1		
D-5		3) ADDED MARKING, 4) VIEW B, ADDED REF NOTE TO SHIELD. 5) LM IT 16 QTY WAS 1, ADDED IT 18		

QTY REQD -2	QTY REQD -1	ITEM NO	CODE IDENT	PART OR IDENTIFYING NUMBER	NOMENCLATURE OR DESCRIPTION	PROCUREMENT SPECIFICATION

PARTS LIST

SEQ NO	IDENT	F-SPEC	NO	ADDITIONAL
1	MARK	100-02	21	HEIGHT .09, COLOR BLACK

PROCESS — CLASSIFICATION

FOR CORRELATION TO GOVT/IND SPECIFICATIONS, SEE TI DRAWING 729467

UNLESS OTHERWISE SPECIFIED
- REMOVE ALL BURRS AND SHARP EDGES
- CONCENTRICITY MACHINED DIAMETERS .010 FIR
- DIMENSIONAL LIMITS APPLY BEFORE FINISH PROCESSING
- IDENTIFYING NUMBERS SHOWN IN PARENTHESES FOR REFERENCE ONLY
- INTERPRET DRAWING IN ACCORDANCE WITH MIL-STD-100

HOLE TOLERANCE

.013 THRU .125 +.004 -.001	.126 THRU .250 +.005 -.001	.251 THRU .500 +.006 -.001
.501 THRU .750 +.008 -.001	.751 THRU 1.000 +.010 -.001	1.001 THRU 2.000 +.012 -.001

NEXT ASSY	USED ON
9.9597	8726

APPLICATION

UNLESS OTHERWISE SPECIFIED
- DIMENSIONS ARE IN INCHES
- TOLERANCES ANGLES ±1°
  3 PLACE DECIMALS ±.010
  2 PLACE DECIMALS ±.02

MATERIAL:

DWN — DATE 5-7-75
CHK — 7-2-75
ENGR
QA
APVD — 8 13 75
CONTR NO
DESIGN ACTIVITY RELEASE 9/4/75

TEXAS INSTRUMENTS INCORPORATED Equipment Group Dallas, Texas

ACOUSTIC COUPLER PANEL ASSY, MODEL 733

SIZE	CODE IDENT NO	DRAWING NO
D	96214	969644

SCALE 1/1 REV E SHEET

LM

TI-7814E M

D 969644

PART NUMBER	REV	DESCRIPTION
0969644-0001	E	ACOUSTIC COUPLER PANEL ASSY 733

ITEM.	QUANTITY.	COMPONENT..	DESCRIPTION	UM
0001	00001.000	0974036-0001	PANEL,ACOUSTIC COUPLER 1210-4036-009	EA
0002	00002.000	0973216-0001	CUP,RUBBER-ACOUSTIC COUPLER	EA
0003	00002.000	0974040-0001	PLATE,CUP MTG 1210-4040-003	EA
0004	00001.000	0973279-0001	PLATE,BAFFLE ACOUSTIC COUPLER 1222-3279-000	EA
0006	00001.000	0972139-0001	MICROPHONE,ACOUSTIC COUPLER SEE - T- DRAWING	EA
0007	00001.000	0972140-0001	SPEAKER,ACOUSTIC COUPLER SEE - T- DRAWING	EA
0009	00001.000	0232245-0505	LAMP FLUSH 14V.08A CART/LENS CAP GREEN DRA - 14-507 GREEN	EA
0010	00001.000	0231845-7507	FASTENER FOR CARTRIDGE LAMP DRA - 76-	FA
0012	00008.000	0972491-0002	RING,RETAINING WAL - 51-5-12S	EA
0014	00001.000	0973259-0001	CABLE ASSY,733 ACOUSTIC COUPLER 1209-3259-004	EA
0016	00002.000	0972632-0008	STRAP,TIEDOWN,ADJUSTABLE,PLASTIC PND - S-C2S-S10	EA
0017	00001.000	0969504-0001	INSERT,ACOUSTIC FOAM 1222-9504-009	EA
0018	REF	0985890-9901	TEST PROGRAM,733 A/C PANEL ASSY	EA

SECTION A-A
SCALE: NONE

NOTES:
1. SOLDER WIRES DIRECTLY TO CONDUCTOR ON COMPONENT SIDE OF PWB (ITEM 2)

PROCESSES:
1. SOLDER PER F-127
2. HOT STAMP, F-100, HEIGHT .12, COLOR BLACK

REVISIONS

ZONE	LTR	DESCRIPTION	DATE	APPROVED
	A	CN392078 (D) KBall 4-23-75 (1) -0001 & -0002 ITEM 5 WAS 232023-0011 (2) DELETED ITEM 8	[illegible]	[illegible]

DESCRIPTION	PART NUMBER
FOOT SWITCH ASSY, STD	973866-0002
FOOT SWITCH ASSY, BLOCK TRANSMISSION	973866-0001

-2	-1	ITEM NO	CODE IDENT	PART OR IDENTIFYING NUMBER	NOMENCLATURE OR DESCRIPTION	PROCUREMENT SPECIFICATION
QTY REQD						

PARTS LIST

UNLESS OTHERWISE SPECIFIED
- REMOVE ALL BURRS AND SHARP EDGES
- CONCENTRICITY MACHINED DIAMETERS .010 FIR
- DIMENSIONAL LIMITS APPLY BEFORE FINISH PROCESSING
- IDENTIFYING NUMBERS SHOWN IN PARENTHESES FOR REFERENCE ONLY
- INTERPRET DRAWING IN ACCORDANCE WITH MIL-STD-100

HOLE TOLERANCE

.013 THRU .125 +.004 −.001	.126 THRU .250 +.005 −.001	.251 THRU .500 +.006 −.001
.501 THRU .750 +.008 −.001	.751 THRU 1.000 +.010 −.001	1.001 THRU 2.000 +.012 −.001

NEXT ASSY	USED ON
973800	8726

APPLICATION

UNLESS OTHERWISE SPECIFIED
- DIMENSIONS ARE IN INCHES
- TOLERANCES ANGLES ±1°
- 3 PLACE DECIMALS ±.010
- 2 PLACE DECIMALS ±.02

MATERIAL:

DWN 5-15-74
CHK 20 MAR 74
ENGR 5 APR 74
QA
APVD 4-8-74
CONTR NO 4/11/74
DESIGN ACTIVITY RELEASE

TEXAS INSTRUMENTS INCORPORATED
Equipment Group Dallas, Texas

FOOT SWITCH ASSEMBLY

SIZE	CODE IDENT NO	DRAWING NO
D	96214	973866

SCALE 1/1 REV A SHEET

LM

TI-7914E

D 973866

PART NUMBER	REV	DESCRIPTION
973866-0001	A	FOOT SWITCH ASSY,BLOCK TRANSMISSION

ITEM.	QUANTITY.	COMPONENT..	DESCRIPTION	UM
0001	00001.000	972511-0001	SWITCH,FOOT OPERATED-125-250V AC,7A SPDT	EA
0002	00001.000	973864-0001	SWITCH FILTER 1209-3864-006	EA
0003	00001.000	973867-0001	CABLE ASSY,FOOT SWITCH-BLOCK XMISSION 1209-3867-006	EA
0004	00001.000	083714-0003	GROMMET 1/4 I.D. 1042 WAL- 7034	EA
0005	00002.000	418293-0002	SCREW 2-56 UNC-2A X .188 PAN HEAD CRES QPL- MS1957-2	EA
0006	00001.000	973869-0001	INSULATOR,FOOT SWICH 1209-3869-003	EA
0007	00001.000	085913-0003	CLAMP 3/16 PLASTIC CABLE	EA
0009	00000.300	411400-0024	WIRE, 24AWG ELECTRO TIN PLATED COPPER	FT
0010	REF	973868-9901	EQUIPMENT SPECIFICATION,FOOT SWITCH	EA
0011	00001.000	418293-0015	SCREW 4-40 UNC-2A X .375 PAN HEAD CRES QPL- MS1957-15	EA
0012	00001.000	418154-0058	WASHER,FLAT #6 CRES QPL- NAS620-C6	EA
0013	00001.000	411101-0057	LOCKWASHER # 4 EXTERNAL TOOTH CRES QPL- MS35335-57	EA
0014	00001.000	411115-0044	NUT,4-40 HEXAGON CRES STEEL MS -35649-244	EA
0015	00001.000	235463-0006	STRAP STD MKR BUNDLE DIA 0 TO 1-3/4 IN PND-SSM-2	EA

WIRE NO	DESCRIPTION	START STATION	FINISH STATION	REMARKS	ITEM NO
1	CABLE ASSY (HEAD)	P1-3	HEAT-4	BLK	56
2	CABLE ASSY (HEAD)	HEAD-2	HEAD-3	SHIELD	56
3	CABLE ASSY (HEAD)	P1-1	HEAD-2	SHIELD	56
4	CABLE ASSY, (HEAD)	P1-2	HEAD-1	WHT	56
5					
6	CABLE ASSY, SWITCH (P2)	P2-2	S2-NO	WHT/GRN	72
7	CABLE ASSY, SWITCH (P2)	P2-1	S2-COM	WHT/BLK	72
8					
9	CABLE ASSY, SWITCH (P12)	P12-2	S1-NC	WHT/GRN	73
10	CABLE ASSY, SWITCH (P12)	P12-1	S1-COM	WHT/BLK	73
11					
12	CABLE ASSY, SWITCH (P13)	P13-2	S3-NC	WHT/GRN	74
13	CABLE ASSY SWITCH (P13)	P13-1	S3-COM	WHT/BLK	74

7 ADJUST LATCHES (ITEMS 29 & 30) TO HOLD DOOR (ITEM 2) CLOSED.

8 ADJUST LINKAGE ASSYS (ITEMS 6 & 7) FOR NO CLEARANCE BETWEEN CARRIAGE (ITEM 33) AND CHASSIS (ITEM 58) WITH THE DOOR (ITEM 2) CLOSED.

9 ADJUST SWITCH S1 TO ACTUATE WHILE CARRIAGE IS APPROACHING CHASSIS (ITEM 58) AT .015 ± .010 BEFORE CONTACT BETWEEN CARRIAGE AND CHASSIS.

10 TAPE HEAD (ITEM 35) WITH A GREEN DOT AS SHOWN IN VIEW J-J MUST BE WIRED ACCORDING TO PIN CONFIGURATION SHOWN IN VIEW C. TAPE HEAD WITHOUT A GREEN DOT MUST BE WIRED ACCORDING TO PIN CONFIGURATION SHOWN IN VIEW A.

11 AS REFERANCE TO WIRES 8 THRU 13: IF (ITEM 96) IS USED AS AN ALTERNATE FOR S1 AND S3, AND IF (ITEMS 98 AND 99) ARE USED IN PLACE OF (ITEMS 73 AND 74), ALSO CONNECTIONS TO SWITCH NO AND NC CONTACTS MUST BE REVERSED SO THAT BROWN/WHITE GOES TO NC AND RED WHITE GOES TO NO.

WIRE NO	DESCRIPTION	START STATION	FINISH STATION	REMARKS	ITEM NO.
8	CABLE ASSY, SW. P(12)	P12-3	S1-NC	WHT/BRN	98
9	CABLE ASSY, SW. P(12)	P12-2	S1-NO	WHT/RED	98
10	CABLE ASSY, SW. P(12)	P12-1	S1-COM	WHT/BLK	98
11	CABLE ASSY, SW. P(13)	P13-3	S3-NC	WHT/BRN	99
12	CABLE ASSY, SW. P(13)	P13-2	S3-NO	WHT/RED	99
13	CABLE ASSY, SW. P(13)	P13-1	S3-COM	WHT/BLK	99

NOTES CONTINUED ON SHT 2 ZONE B-3

NOTES:

1. ALL PLUG NO.S ASSEMBLED TO RELATED 'J' NO.S ON PWB. WHT DOT INDICATES PIN NO 1 ON EACH CONNECTOR. WHT DOT IS ON TOP SIDE.

3 ADJUST AND LOCK SOLENOID SO THAT, WITH CARRIAGE (ITEM 33) SEATED AGAINST THE CHASSIS (ITEM 58) STOP, A FORCE OF 12 OZ APPLIED TO THE TOP OF THE SOLENOID PLUNGER WILL MAINTAIN SEATING AND A FORCE OF 10 OZ WILL ALLOW PLUNGER TO UNSEAT.

DISCARD ANY LOCK WASHER SUPPLIED WITH SOLENOID ASSY (ITEMS 71 OR 34).

4 ADJUST HEAD (ITEM 35) SO THAT, WITH CARRIAGE (ITEM 33) SEATED AGAINST CHASSIS (ITEM 58) STOP, THERE IS A CLEARANCE OF .020 ± .005 BETWEEN THE HEAD ASSY TAPE GUIDES AND THE GUIDE POSTS.

5 PLACE ITEM 88 (PLATE, ID, SERIAL NO.) ONTO THE INSIDE AND AT THE TOP OF THE DOOR.

6 POSITION SENSOR ASSY (ITEM 106) UP AGAINST BOTTOM EDGE OF CARRIAGE CASTING & CENTERED BETWEEN SIDEWALLS.

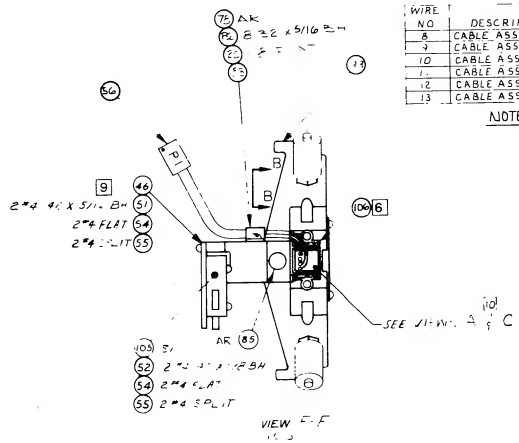

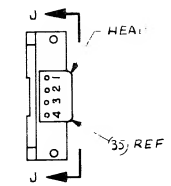

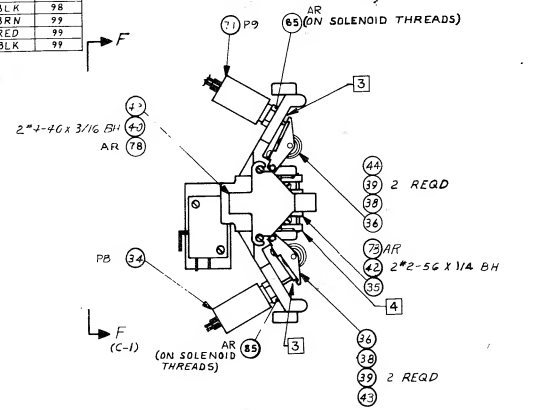

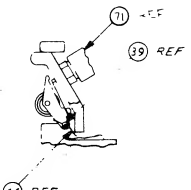

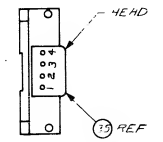

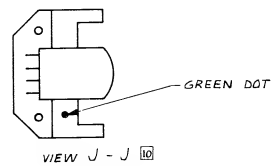

REVISIONS			
LTR	DESCRIPTION	DATE	APPD
A	391730 (C) 4-25-75 GM	5MAY75	
	1. IT 54 WAS QTY 18 & REMOVED FROM PICTORIAL SHT AT P10 & P11		
	FORMAL RELEASE		
B	CN403229 (C) Ross 5-28-75 (1)	5/29/75	
	REVISED PER EXTENSIVE ENGR CHANGES		
C	406660 (A) George Barth 9/4/75	9/10/75	
	1) SH 1 WIRE LIST WIRE NO. 9 WAS S1-NO; WIRE NO. 12 WAS S3 NO; ADDED NOTE 11 AND ALTERNATE WIRE LIST		
	2) SH 2 ZONE C2 CALLOUT FOR ITEM 105 WAS 61, ZONE C1 ADDED REF. 105 TO ITEM 61 CALLOUT; SH 3 ZONE C2 PLUG ID CHART PLUG P12 AND P13 WERE ITEM 61		
	3) L/M ADDED ITEM 105, DELETED ITEM 61A S1 AND S3, ADDED 105 TO 96B, QTY ITEM 61 WAS 3 (4) ADDED PROJ. NO 8734 TO TITLE BLOCK		
D	410017 (B) Z. PALMER 11-4-75	11-4-75	
	1) ADDED NOTE 12 ON SHT 2		
E	409778 (D) D. Bell 3/27/76	4/1/76	
	ITEM 18 P/N WAS 972988-0005; ITEM 19 P/N WAS 972988-0048		
F	409779 (C) P. Waddell 4-7-76	4-10-76	R. Conte
	(1) ADDED NOTE 13 TO SH 2.		
G	413939 (C) J. SULLIVAN 7/13/76	7/13/76	
	1) SHT 1, REMOVED NOTE 2		
	2) DELETED ITEM 87 FROM L/M P/N WAS 971405-0001		
H	415512 (E) EE Rodriguez 8-19-76	8/24/76	
	1. L/M ITEM 90 PART NO WAS 972610-0006		
J	CN 414835 T. Bumby	3/31/77	
	(1) DELETED ITEM 93, QTY WAS REF, P/N WAS 962316-9901, DESCRIPTION WAS TEST PROC. SYSTEM CASSETTE TRANSPORT		
K	CN 423683 C. Eddington	5-17-77	
	1) ADD ITEM 106 TO REPLACE ITEM 80		
	2) CHNG ITEM 80 TO BE ALT FOR ITEM 106		

REV STATUS	REV	K	H	K	
OF SHEETS	SH	1	2	3	

-0002 QTY REQD	-0001	ITEM NO	UNIT OF DWG NO / ISSUE	PART NUMBER	DESCRIPTION	VENDOR PART NUMBER

UNLESS OTHERWISE SPECIFIED
DECIMAL XX ± .02 XXX ± .010
FRACTIONAL 1-64 ANGULAR ± 1°
CONCENTRICITY MACHINED DIAMETERS .004 TIR
ALL DIMENSIONS TO BE MET BEFORE PLATING
REMOVE ALL BURRS AND SHARP EDGES
DO NOT SCALE THIS DRAWING
ALL DIMENSIONS IN INCHES
SURFACES MARKED √ TO HAVE
DRILLED HOLE TOLERANCES
.010 TO .136 +.003 -.000 .136 TO .250 +.005 -.000
.250 AND ABOVE +.005

PROCESSES: NONE

LIST OF MATERIALS

PROJ NO	SIZE	NEXT ASSY DWG NO
8726		960974
8726		960976
8734		986961

DRAWN 12/4/74
CHECKED 12/4/74
ENGINEER 12/4/74
PROJ ENGR 12/4/74
APPD MFG 12/4/74
QUALITY 12/4/74
MFG ENGR 12/4/74

TEXAS INSTRUMENTS INCORPORATED INDUSTRIAL PRODUCTS DIVISION HOUSTON, TEXAS

TITLE: MAGNETIC TAPE TRANSPORT ASSY
CASSETTE TRANSPORT
SYSTEM 700 ASR
SCALE 1/1 D 986353

SHEET 1 OF 3 LM

B-84

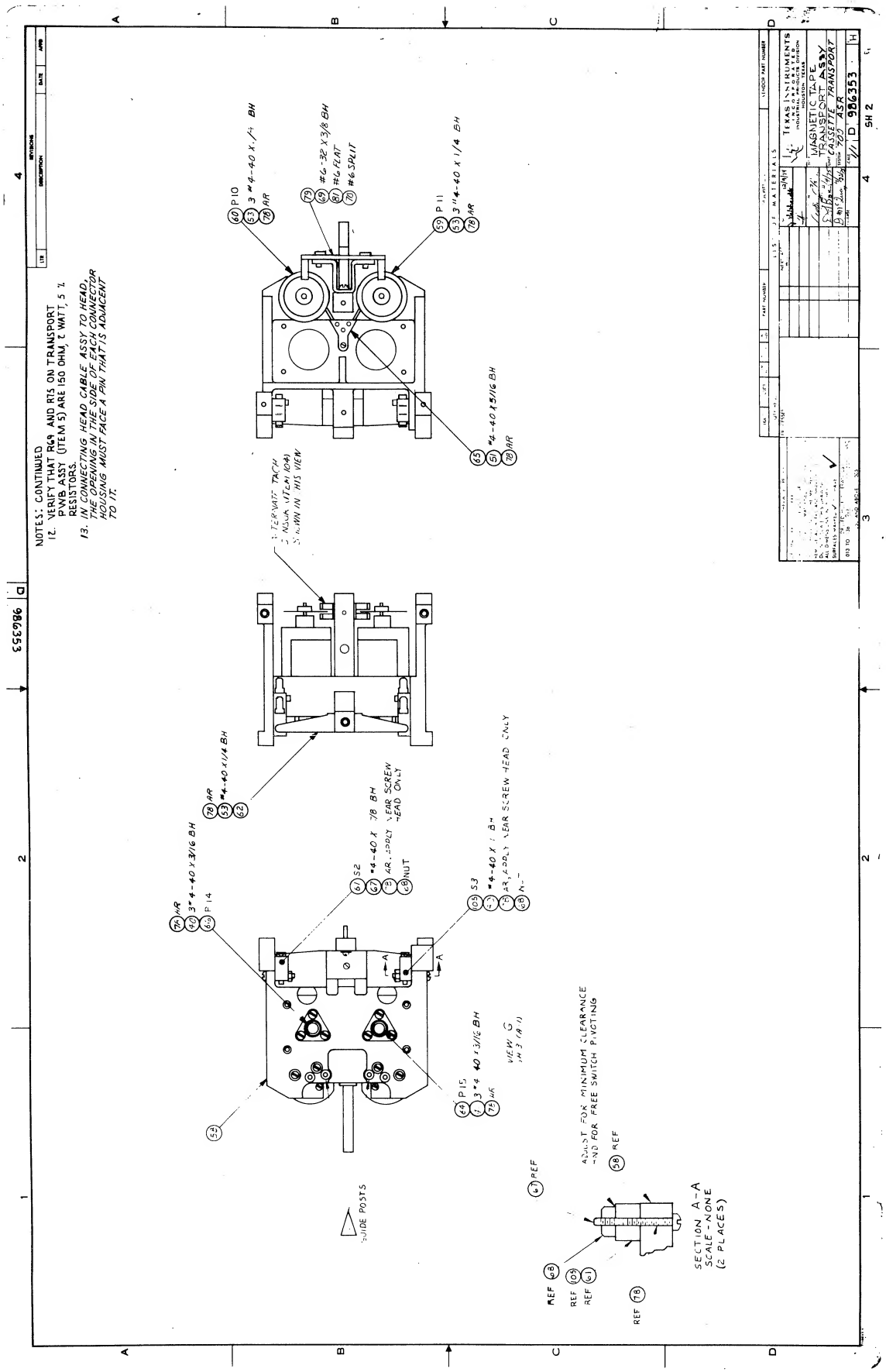
NOTES: CONTINUED
12. VERIFY THAT RQ9 AND R15 ON TRANSPORT PWB ASSY (ITEM 5) ARE 150 OHM, 2 WATT, 5 % RESISTORS.
13. IN CONNECTING HEAD CABLE ASSY TO HEAD, THE OPENING IN THE SIDE OF EACH CONNECTOR HOUSING MUST FACE A PIN THAT IS ADJACENT TO IT.
TEXAS INSTRUMENTS
MAGNETIC PERIPHERALS
HOUSTON, TEXAS
MAGNETIC TAPE ASSY
TRANSPORT CASSETTE TRANSPORT 700 ASR
D 986353
SH 2
SIDE POSTS
SECTION A-A
SCALE - NONE
(2 PLACES)
VIEW G

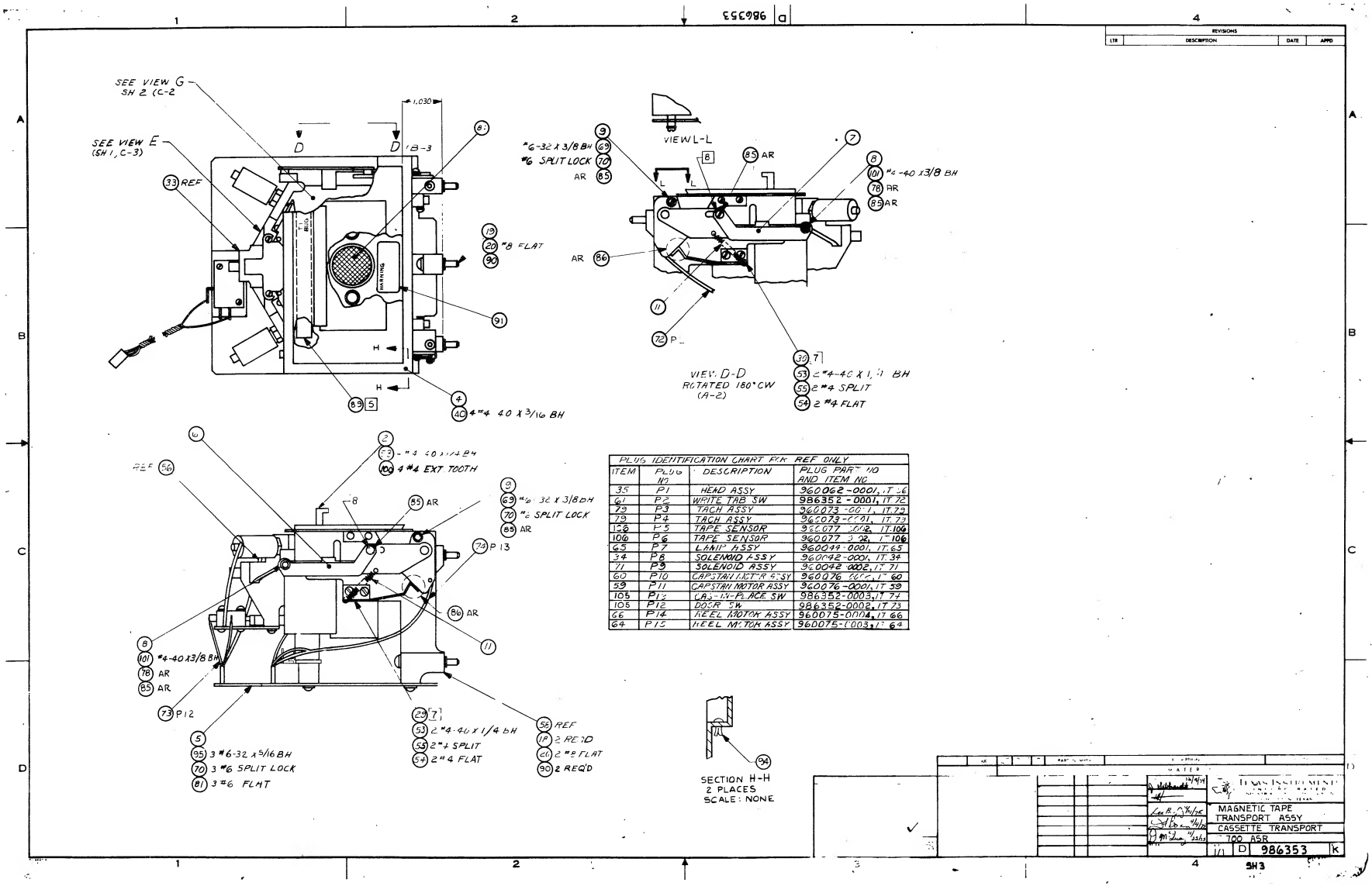

PLUG IDENTIFICATION CHART FOR REF ONLY			
ITEM	PLUG NO	DESCRIPTION	PLUG PART NO AND ITEM NO
35	P1	HEAD ASSY	960062-0001, IT 36
61	P2	WRITE TAB SW	986352-0001, IT 72
79	P3	TACH ASSY	960073-0001, IT 79
79	P4	TACH ASSY	960073-0001, IT 79
106	P5	TAPE SENSOR	960077-0002, IT 106
106	P6	TAPE SENSOR	960077-0002, IT 106
65	P7	LAMP ASSY	960044-0001, IT 65
34	P8	SOLENOID ASSY	960042-0001, IT 34
71	P9	SOLENOID ASSY	960042-0002, IT 71
60	P10	CAPSTAN MOTOR ASSY	960076-0002, IT 60
59	P11	CAPSTAN MOTOR ASSY	960076-0001, IT 59
105	P12	CASSIN-PLACE SW	986352-0003, IT 74
105	P12	DOOR SW	986352-0002, IT 73
66	P14	REEL MOTOR ASSY	960075-0004, IT 66
64	P15	REEL MOTOR ASSY	960075-0003, IT 64

PART NUMBER	REV	DESCRIPTION
0986353-0001	K	MAGNETIC TAPE TRANSPORT ASSY

ITEM.	QUANTITY.	COMPONENT..	DESCRIPTION	UM
0002	00001.000	0960378-0001	COOR ASSY,TRANSPORT 1209-0378-022	EA
0004	00001.000	0960067-0001	BEZEL,MOLDED	EA
0005	00001.000	0981339-0001	CASSETTE TRANSPORT,PWB ASSY 1210-1339-C96	EA
0006	00001.000	0960342-0001	LINKAGE ASSY,(LEFT) 1209-0342-033	EA
0007	00001.000	0960342-0002	LINKAGE ASSY,(RIGHT) 1209-1512-033	EA
0008	00002.000	0960423-0001	BUSHING,LINK UPPER 1209-0423-022	EA
0009	00002.000	0960346-0001	BUSHING,PIVOT 1209-0346-023	EA
0011	00002.000	0960048-0001	SPRING,EJECTOR	EA
0018	00002.000	0418293-0051	SCREW 8-32 X 1-1/2 LG PHILLIPS HD	EA
0019	00001.000	0418293-0048	SCREW 8-32 X 7/8 LG.PHILLIPS HD QPL - M-1957-48	EA
0020	00004.000	0416622-0024	WASHER #8 FLAT QPL - A-960C8L	EA
0021	REF	0981337-9901	LOGIC DIAGRAM,CASSETTE TRANSPORT	EA
0025	REF	0960333-9901	SPECIFICATION	EA
0026	REF	0960332-9901	SPECIFICATION	EA
0029	00001.000	0960429-0001	LEFT HAND LATCH 1209-0429-022	EA
0030	00001.000	0960429-0002	RIGHT HAND LATCH 1209-1026-019	EA
0033	00001.000	0960401-0001	CARRIAGE,MACHINED 1209-0401-069	EA
0034	00001.000	0960042-0001	SOLENOID,ASSY (P8) 1209-0042-093	EA
0034A			P8 1209-0042-093	
0035	00001.000	0960340-0001	HEAD,MOUNT ASSY	EA
0036	00002.000	0960347-0001	PINCH ROLLER ASSY 1209-0347-033	EA
0038	00002.000	0960348-0001	SHAFT,PINCH ROLLER PIVOT 1209-0348-025	EA
0039	00004.000	0416402-4005	RING RETAINING EXTERNAL E MIL - MS-6633-4009	EA
0040	00012.000	0972988-0012	SCREW 4-40 X .188 PAN HEAD CRES	EA
0042	00002.000	0972988-0003	SCREW 2-56 X .250 PAN HEAD CRES	EA
0043	00001.000	0960355-0001	SPRING PINCH ROLLER SUPPORT	EA
0044	00001.000	0960355-0002	SPRING PINCH ROLLER SUPPORT	EA
0046	00001.000	0960402-0001	BRACKET SWITCH 1209-0402-019	EA
0049	00001.000	0960054-0001	SPRING,SEATING 1209-0054-018	EA
0051	00003.000	0972988-0014	SCREW 4-40 X .312 PAN HEAD CRES	EA
0052	00002.000	0972988-0018	SCREW 4-40 X .625 PAN HEAD CRES	EA
0053	00015.000	0972988-0013	SCREW 4-40 X .250 PAN HEAD CRES	EA
0054	00008.000	0411027-0803	WASHER .125 X .250 X .022 FLAT CRES QPL - M-15795-803	EA
0055	00008.000	0418431-0024	LOCKWASHER # 4 SPLIT,HELICAL CRES QPL - A-S1676-C4	EA
0056	00001.000	0960062-0001	CABLE ASSY,(HEAD) 1209-0062-054	EA
0056A			P1 1209-0062-054	
0058	00001.000	0960379-0001	TRANSPORT CHASSIS SUBASSY 1209-0379-058	EA
0059	00001.000	0960076-0001	CAPSTAN MOTOR ASSY (P11) 1209-0076-032	EA
0059A			P11 1209-0076-032	
0060	00001.000	0960076-0002	CAPSTAN MOTOR ASSY (P10) 1209-1519-026	EA

PART NUMBER	REV	DESCRIPTION
0986353-0001	K	MAGNETIC TAPE TRANSPORT ASSY

ITEM.	QUANTITY.	COMPONENT..	DESCRIPTION	UM
0060A			P10 1209-1519-C26	
0061	00001.000	0772235-0003	SWITCH,CONTACT .1A AMP 125 VAC	EA
0061A			S2	
0062	00001.000	0960039-0001	SPRING,RETAINING 1209-0039-021	EA
0064	00001.000	0960075-0003	REEL MOTOR ASSY,W/O BRAKE P15	EA
0064A			P15	
0065	00001.000	0960044-0002	LAMP ASSEMBLY CASSETTE TRANSPORT 700 ASR	EA
0066	00001.000	0960075-0004	REEL MOTOR ASSY,W/C BRAKE P14	EA
0066A			P14	
0067	00001.000	0972988-0020	SCREW 4-40 X .875 PAN HEAD CRES	EA
0068	00002.000	0232450-0000	NUT 4-40 FIBER LOCK ESN - 79-M-4-40	EA
0069	00003.000	0972988-0028	SCREW 6-32 X .375 PAN HEAD CRES	EA
0070	00006.000	0411104-0136	WASHER #6 LOCKSPLIT QPL - M-35338-136	EA
0071	00001.000	0960042-0002	SOLENOID ASSY (P9) 1209-1508-088	EA
0071A			P9 1209-1508-088	
0072	00001.000	0986352-0001	CABLE ASSY,SWITCH CASSETTE T (P2) 1209-6352-023	EA
0072A			P2 1209-6352-023	
0073	00001.000	0986352-0002	CABLE ASSY,SWITCH CASSETTE T (P12) 1209-6353-023	EA
0073A			P12 1209-6353-023	
0074	00001.000	0986352-0003	CABLE ASSY,SWITCH CASSETTE T (P13) 1209-7547-022	EA
0074A			P13 1209-7547-022	
0078	AR	0235182-0002	LOCTITE SEALENT GRADE 242 LOC - -2-2	EA
0079	00001.000	0986361-0001	HOUSING ASSY,TACH SENSOR 1209-6361-021	EA
0080	00000.000	0960077-0001	TAPE SENSOR ASSY 1209-0077-034	EA
0080A			ITEM 80 MAY BE USED AS 1209-0077-034	
0080B			ALTERNATE FOR ITEM 106 1209-0077-034	
0081	00004.000	0416622-0013	WASHER #6 FLAT QPL - A-96006L	EA
0082	00001.000	0972988-0042	SCREW 8-32 X .312 PAN HEAD CRES	EA
0083	00001.000	0054967-0002	CLAMP LOOP .1 DIA. BUR - HP-2N	EA
0084	00001.000	0960343-0001	REFLECTOR,BEZEL-CASSETTE XPORT	EA
0085	AR	0232573-0001	OIL #43 TERRESTIC HUM - -	EA
0086	AR	0231595-0006	GREASE CARINA #1 OR AX - SH-LL OIL	EA
0088	00001.000	0960140-0003	PLATE,IDENTIFICATION-SERIAL NO.TRANSPORT 1209-0140-000	EA
0089	00001.000	0972988-0021	SCREW 4-40 X 1.00 PAN HEAD CRES	EA
0090	00003.000	0537531-0006	PACKING,PREFORMED O-RING	EA
0091	00001.000	0971414-0001	LABEL,CLEANING PROCEDURE 1209-1414-000	EA
0092	REF	0962315-9901	TEST PROC,UNIT CASSETTE TRANSPORT	EA
0094	00002.000	0972371-0001	FASTNER,SNAP-IN,PLUG-PLASTIC	EA
0095	00003.000	0972988-0027	SCREW 6-32 X .312 PAN HEAD CRES	EA
0096	00000.000	0772235-0001	SWITCH,SENSITIVE 0.1 AMP 125 VAC SEE - -T- DRAWING	EA

PART NUMBER	REV	DESCRIPTION
0986353-0001	K	MAGNETIC TAPE TRANSPORT ASSY

ITEM.	QUANTITY.	COMPONENT..	DESCRIPTION	UM
0096A			ITEM 96 MAY BE USED AS AN	
			SEE - T- DRAWING	
0096B			ALTERNATE FOR ITEM 61 & 105	
			SEE - T- DRAWING	
0097	00000.000	0960060-0001	CABLE ASSY,SWITCH (P2)	EA
			1209-0060-030	
0097A			ITEM 97 MAY BE USED AS AN	
			1209-0060-030	
0097B			ALTERNATE FOR IT 72 ONLY IF	
			1209-0060-030	
0097C			ITEM 96 IS USED AS AN	
			1209-0060-030	
0097D			ALTERNATE FOR ITEM 61	
			1209-0060-030	
0098	00000.000	0960060-0002	CABLE ASSY,SWITCH (P12)	EA
			1209-1510-031	
0098A			ITEM 98 MAY BE USED AS AN	
			1209-1510-031	
0098B			ALTERNATE FOR IT 73 ONLY IF	
			1209-1510-031	
0098C			ITEM 96 IS USED AS AN	
			1209-1510-031	
0098D			ALTERNATE FOR ITEM 61	
			1209-1510-031	
0099	00000.000	0960060-0003	CABLE ASSY,SWITCH (P13)	EA
			1209-1511-033	
0099A			ITEM 99 MAY BE USED AS AN	
			1209-1511-033	
0099B			ALTERNATE FOR IT 74 ONLY IF	
			1209-1511-033	
0099C			ITEM 96 IS USED AS AN	
			1209-1511-033	
0099D			ALTERNATE FOR ITEM 61	
			1209-1511-033	
0100	00004.000	0411101-0057	LOCKWASHER # 4 EXTERNAL TOOTH CRES	EA
			QPL - M-35335-57	
0101	00002.000	0972988-0015	SCREW 4-40 X .375 PAN HEAD CRES	EA
0102	REF	0968392-9901	AGING PROCEDURE	EA
0103	REF	0968387-9901	POST AGING PROCEDURE	EA
0104	00000.000	0960073-0002	HOUSING ASSY,TACH SENSOR ASSY	EA
0104A			MAY BE USED AS AN ALTERNATE	
0104B			TO ITEM 79	
0105	00002.000	0772235-0004	SWITCH,SENSITIVE .1 AMP 125 VAC	EA
0105A			S1 S3	
0106	00001.000	0960077-0002	TAPE SENSOR ASSY	EA
0106A			USE -2 TAPE SENSOR ONLY	
0106B			ON XFERTS USING ITEM 5	
0106C			(PWB ASSY) OF REV H OR	
0106D			LATER	

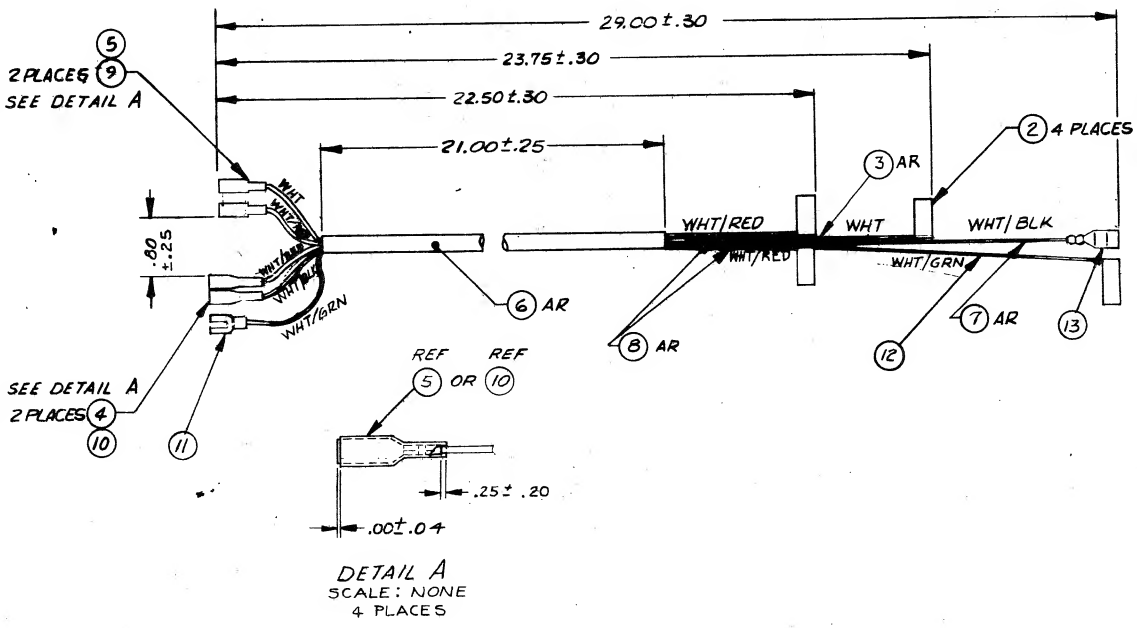

REVISIONS

LTR	DESCRIPTION	DATE	APPD
A	376187(C) R. Purcell 6/30/72 ADDED IT. 9; IT. 2 WAS QTY 1, 235626-[illegible]; TITLE WAS: POWER SWITCH ASSY; CHG'D PICTORIALLY; DIM. 27.00±.30 WAS 26.00±.50; 22.75±.30 WAS 23.50±.50; 21.50±.30 WAS 22.00±.50; DELETED DETAIL A. DELETED IT. 1, WAS QTY 1, PN 231540-9001. CHGD WIRE, WERE TEFLON	7/13/72	[illegible]
	FORMAL RELEASE		
B	381149 (D) J. Pierce 3-26-73 1) ZONE B3, "2 4 PLACES" WAS "2 3 PLACES" 2) ADDED DETAIL "A" 3) ZONE B1 DIM .80±.25 WAS .80 4) ADDED IT. 5 ZONE B1 & IT. 10 ZONE C1 5) IT. 2 QTY WAS 3 6) IT. 4, P/N WAS 235837-0045 7) IT. 5, P/N WAS 236266-0001 8) IT. 9, P/N WAS 772810-0001 9) ADDED ITEM 10	3/27/73	[illegible]
C	392405 (D) G. Buttonsate 3-19-74 IN DRAWING, FOLLOWING DIM. WERE CHANGED 28.00 WAS 27.00, 23.75 WAS 22.75, 22.50 WAS 21.50 21.00 WAS 20.00	3/21/74	[illegible]
D	393799 (C) [illegible] 9-24-74 CHG: ITEM NO -0003, 0005, 0006, 0007, 0008, & 0010 QTY. WAS: AR	9/26/74	[illegible]
E	396578 (D) [illegible] 3/4/75 (1) ADDED ITEMS 11 & 12 TO LM & PICTORIAL & CALLOUTS TO F/D; QTY FOR ITEM 2 WAS 4; ITEM 6 P/N & DESC WAS "236316-0000 TUBING #6..166 ID"	3/4/75	[illegible]
F	389969 (D) [illegible] 9/17/75 ZONE C-3 ITEMS 4 & 10 WERE ITEM 2. [illegible] PLACES. L/M ITEM 2 WAS QTY 5, ITEM 4 WAS QTY 2, ITEM 5 WAS .2, ITEM 10 WAS .2	9-26-75	[illegible]
G	389999 (D) [illegible] 2/14/76 (1) ZONE C-3 ITEM 13 WAS ITEMS 4 & 10 (2) LM; ITEM 4 QTY 2 WAS 3. (3) ITEM 5 QTY .200 WAS .300. (4) ITEM 10 .200 WAS .300. (5) ADDED ITEM 13, 1 EA, PN 235837-1000, TERM. LUG, FASTON, INSUL.	3-23-76	[illegible]
H	409765 (D) [illegible] 3/27/76 (1) ZONE B-2 DIM 29.00±.30 WAS 28.00±.30	3/27/76	[illegible]

-0002	-0001	ITEM NO.	UNIT OF ISSUE	DWG SIZE	PART NUMBER	DESCRIPTION	VENDOR PART NUMBER
QTY REQD							

LIST OF MATERIALS

UNLESS OTHERWISE SPECIFIED
DECIMAL .XX ± .02 .XXX ± .010
FRACTIONAL ± 1/64 ANGULAR ± 1°
CONCENTRICITY MACHINED DIAMETERS .004 TIR
ALL DIMENSIONS TO BE MET BEFORE PLATING
REMOVE ALL BURRS AND SHARP EDGES
DO NOT SCALE THIS DRAWING
ALL DIMENSIONS IN INCHES
SURFACES MARKED ✓ TO HAVE ✓
DRILLED HOLE TOLERANCES
.013 TO .136 +.003 −.002 .136 TO .250 +.005 −.003
.250 AND ABOVE ± .005

PROCESSES: NONE

PROJ NO.	SIZE	NEXT ASSY DWG NO.
8726	E	959404

DRAFTSMAN 12/1/71 R. Purcell
CKD—DRAFTSMAN
DESIGN ENGINEER 9-12-72
APPD—ENGINEER 7/13/72
APPD—MFG 7/14/72
RELEASE 11-7-74

TEXAS INSTRUMENTS INCORPORATED
INDUSTRIAL PRODUCTS DIVISION
HOUSTON, TEXAS

TITLE: CABLE ASSY, POWER SWITCH
UNIT: COMMON PRINTER ASSY
SYSTEM: 700 ASR
SCALE: NONE | C | 959246 | REV H

L.M

MAY 28, 1976

PART NUMBER	REV	DESCRIPTION.....
959246-0001	H	CABLE ASSY,POWER SWITCH

ITEM.	QUANTITY.	COMPONENT..	DESCRIPTION.....	UM	I
0002	00004.000	772163-0002	TERMINAL AWG 20-16 CRIMP FLAG TYPE SPT AMP-42800-2	EA	
0003	00002.000	538347-4999	WIRE HOOKUP B-20 AWG 19 STR WHITE JUD- HH0119	FT	
0004	00002.000	235836-0100	TERMINAL ON MACHINE 42640-2 -42640-2	EA	
0005	00000.200	417177-0005	INSULATION SLEEVING,ELECT-HEAT SHRINK RAC-	FT	
0006	00001.800	411634-2100	SLEEVE,PVC .208 DIA .020 WALL QPL- MIL-I-631D	FT	
0007	00002.500	538347-4099	WIRE HOOKUP B-20 AWG 19 STR BK/WH JUD- HH0118	FT	
0008	00004.000	538347-4299	WIRE HOOKUP B-20 AWG 19 STR RD/WH JUD- HH0118	FT	
0009	00002.000	800411-0001	TERMINAL RCPT 22-20 AWG TIN PLD BRASS AMP-42236-1	EA	
0010	00000.200	417177-0006	INSULATION SLEEVING,ELECT-HEAT SHRINK RAC-	FT	
0011	00001.000	232358-0001	LUG #5/#6 SPADE FLNG VINYL INS AWG 22-16 AMP-2-32562-1 REEL	EA	
0012	00002.400	538347-5599	WIRE HOOKUP B-18 AWG 19 STR GN/WH JUD- HH0203	FT	
0013	00001.000	235837-1000	TERMINAL LUG FASTON INSUL AWG 22-18 AMP-60972-3 TAPE MTG	EA	

WIRE NO.	DESCRIPTION	START STATION	FINISH STATION	TOTAL LENGTH	LM ITEM NO.
1	#22 AWG PVC-WHT	P1-1	P4-1	19.0 +.88 -.00	4
2		2	2		
3		3	3		
4		4	4		
5		5	5		
6		6	6		
7		7	7		
8		8	8		
9		9	9		
10		10	10		
11		A	A		
12		B	B		
13		C	C		
14		D	D		
15		E	E		
16		F	F		
17		H	H		
18		J	J		
19		K	K		
20	#22 AWG PVC-WHT	P1-L	P4-L	19.0 +.80 -.00	4

0001	00002.000	232118-0075	HOUSING CONN.PC 10 DUAL POS PHENOLIC AMP-582963-2	EA
0001A			P1,P4 AMP-582963-2	
0002	00040.000	231553-0010	CONTACT LEAF 42717-3 AMP-42717-3	EA
0003	00010.000	235463-0001	STRAP MINATURE BUNDLE DIA 0 TO 3/4 IN PND-SST-1	EA
0004	00030.000	538347-3999	WIRE HOOKUP B-22 AWG 19 STR WHITE JUD- HH0115	FT
0005	00001.000	235463-0006	STRAP STD MKR BUNDLE DIA 0 TO 1-3/4 IN PND-SSM-2	EA
0006	REF	970650-9901	DIT-MCO TEST PROGRAM	EA
0007	REF	981334-990?	UNIT TEST PROCEDURE,CABLE ASSY	EA

REVISIONS

LTR	DESCRIPTION	DATE	APPD
C	11/6/71 ECN 368506 REVISED L/M	7/11/72	
D	371255(C) 6-5-72 CHG 1) ZONE B3, DIM. 6.00±.25 WAS 5.50±.25 2) ZONE C3, DIM. 3.50±.25 WAS 2.50±.25 3) DESCRIPTION OF WIRE IN PT TO PT WAS #22 AWG PVC WHT ADDED 1) ZONE B3, DIM. 4.75±.20 & 2.25±.25 2) ZONE A2 & 3, DIM. 8.00±.10 3) +2.0 (.00, TO TOTAL WIRE LENGTH IN PT TO PT 4) PIN NO. DESIGNATION 1-10 & A-L, ZONE C3 FORMAL RELEASE	7/11/72	
E	372892(C) 8/23/72 CHG: 1) ON LM 1A WAS P4, P11. 2) F/D P4 WAS P11, P1 WAS P4. 3) ITEM 3 QTY WAS 8.		
F	374977(B) 1/27/73 CHANGED ROUTING OF CABLE DIMENSIONS IN ZONE A, B3 & C3 CHANGED	2/3/73	
G	382192(D) 8-31-73 1. LM ADDED IT. 6 DIT-MCO TEST PROCEDURE	9-3-73	
H	381308(C) 9-20-73 0001 LM IT. 3 P/N WAS 235463-0002	9/29/73	
J	381278(C) 10-9-73 1) ZONE B2 CALLOUT FOR PROCESS 2 WAS PROCESS 1 2) ADDED PROCESS 2		
K	381248(D) 11-2-73 1. CHG: DIM. ZONE 2-A WAS 9.50±.25. 2. CHG: DIM. ZONE 3-C WAS 3.50±.25.	11-2-73	
L	375868(E) 3-10-5 ADDED ITEM 7 TO LM		

UNLESS OTHERWISE SPECIFIED
DECIMAL .XX = .02 .XXX = .010
FRACTIONAL ±1/64 ANGULAR ±1°
CONCENTRICITY MACHINED DIAMETERS .004 TIR
ALL DIMENSIONS TO BE MET BEFORE PLATING
REMOVE ALL BURRS AND SHARP EDGES
DO NOT SCALE THIS DRAWING
ALL DIMENSIONS IN INCHES
SURFACES MARKED ✓ TO HAVE

PROCESSES
1. HOT STAMP F-100. HEIGHT .12.
2. RUBBER STAMP, F-100 HEIGHT .12

LIST OF MATERIALS

NEXT ASSY DWG NO.	SIZE	
960970	D	8726
960971	D	8726
960972	D	8726
960973	D	8726

TEXAS INSTRUMENTS INCORPORATED
INDUSTRIAL PRODUCTS DIVISION
HOUSTON, TEXAS

CABLE ASSY, KEYBOARD TERMINAL ASSY 700 ASR

D 959370 L
LM

959370 D

NOTES:

1. TIGHTEN THESE SCREWS TO 24-32 IN-OZ

LTR	DESCRIPTION	DATE	APPD
D	371256 (C) 7/5/72 IT. 11 WAS 236525-0009, QTY 31.50, IT. 13 WAS 236517-0009, QTY 22.50 ADDED IT. 1 & 1A	7-7-72	
	FORMAL RELEASE		
E	374979 (C) 3-16-73 DELETED 1) IT. 4 WAS P/N 235026-0016, QTY 4 2) IT. 9 WAS P/N 232452-0000, QTY 4 3) IT. 7 WAS P/N 236377-0000, QTY 4 CHG 1) IT. 6 WAS P/N 235028-0020 2) IT. 8 WAS P/N 236374-0000, QTY 4 3) IT. 14 WAS P/N 960954, QTY 1 4) DIM. 16.00±.50 WAS 16.00±.25	3-30-73	
F	382193 (D) 8-31-73	9-8-73	
	1. LM ADDED IT. 15, DIT-MCO TEST PROCEDURE		
G	395868 (E) 3-10-5 ADDED ITEM 16 TO LM		
H	10-1-75 ITEM 10 WAS ZIP-ETZ-0625-GP-20BOL	10-4-75	
J	CN424067	9/29/77	
	(1) ITEM 10 PN WAS 236303-0500		

WIRE NO.	DESCRIPTION	START STATION	FINISH STATION	TOTAL LENGTH	ITEM NO
1	#18 AWG IPVC-WHITE	P3-1	P1-1		13
2	#18 AWG IPVC-	-2	-2		13
3	#18 AWG IPVC-	-3	-3		13
4	#22 AWG IPVC-	-4	-4		11
5		-5	-5		11
6		-6	-6		11
7		-7	-7		11
8		-8	-8		11
9		-9	-9		
10		-10	-10		
11		-11	-11		11
12		-12	-12		11
13	#22 AWG IPVC-	-13	-13		11
14	#18 AWG IPVC-	-14	-14		3
15		-15	-15		3
16		-16	-16		3
17		-17	-17		13
18		-18	-18		3
19		-A	-A		3
20	#18 AWG IPVC-	-B	-B		13
21	#22 AWG IPVC-	-C	-C		[illegible]
22		-D	-D		
23		-E	-E		[illegible]
24		-F	-F		
25		-H	-H		
26		-J	-J		
27		-K	-K		
28		-L	-L		
29		-M	-M		
30		-N	-N		
31	#22 AWG IPVC-	-P	-P		
32	#18 AWG IPVC	-R	-R		[illegible]
33		-S	-S		[illegible]
34		-T	-T		[illegible]
35		-U	-U		[illegible]
36	#18 AWG IPVC-WHITE	P3-V	P1-V		[illegible]

UNLESS OTHERWISE SPECIFIED
DECIMAL XX ± .02 XXX ± .010
FRACTIONAL ± 1/64 ANGULAR ± 1
CONCENTRICITY MACHINED DIAMETERS .004 TIR
ALL DIMENSIONS TO BE MET BEFORE PLATING
REMOVE ALL BURRS AND SHARP EDGES
DO NOT SCALE THIS DRAWING
ALL DIMENSIONS IN INCHES
SURFACES MARKED ✓ TO HAVE
DRILLED HOLE TOLERANCES
.013 TO .136 +.003/-.001 .136 TO .250 +.003/-.003
.250 AND ABOVE ±.005

PROCESSES
1. HOT STAMP PER [illegible]

NEXT ASSY	SIZE	DWG NO
8726	D	960970
8726	D	960972

LIST OF MATERIALS

TEXAS INSTRUMENTS INCORPORATED
INDUSTRIAL PRODUCTS DIVISION
HOUSTON, TEXAS

CABLE ASSY, CASSETTE
TERMINAL ASSY
700 ASR
SCALE NONE D 959371

OCTOBER 14, 1977

L I S T O F M A T E R I A L

PART NUMBER REV DESCRIPTION.....
0959371-0001 J CABLE ASSY,CASSETTE

ITEM.	QUANTITY.	COMPONENT..	DESCRIPTION.....	UM
0001	00002.000	0539815-0002	CONNECTOR 18 DUAL POS PHENOLIC AMP -480133-9	EA
0001A			P1 P3 AMP -480133-9	
0002	00002.000	0960914-0003	HOOD,I/O CONNECTOR 18 PIN - - -000	EA
0003	00072.000	0231553-0010	CONTACT LEAF 42717-3 AMP -42717-3	EA
0006	00004.000	0235028-0020	SCREW 4-40X11/16 BH	EA
0008	00002.000	0418212-0040	STRAP,TIEDOWN,ADJUSTABLE,PLASTIC QPL - MS3367-4-9	EA
0010	00001.500	0972435-0004	INSULATION SLVG,ZIPPER TUBE,PVC ALP - ZIP-31-5/8"	FT
0011	00031.500	0538347-3999	WIRE HOOKUP 8-22 AWG 19 STR WHITE JUD - HH0115	FT
0012	00001.000	0418201-0060	STRAP,MARKER,ADJUSTABLE,PLASTIC QPL-MS-3368-1-98	EA
0013	00022.500	0538347-5999	WIRE HOOKUP 8-18 AWG 19 STR WHITE JUD - HH0203	FT
0014	00002.000	0971413-0001	ADAPTER,RIGHT ANGLE-CASSETTE CABLE 1209-1413-027	EA
0015	REF	0970651-9901	DIT-MCC TEST PROGRAM	EA
0016	REF	0981334-9901	UNIT TEST PROCEDURE,CABLE ASSY	EA

WIRE NO.	DESCRIPTION	-0001 START STATION	-0001 FINISH STATION	-0001 SIGNATURE	-0002 START STATION	-0002 FINISH STATION	-0002 SIGNATURE	-0003 WIRE NO.	-0003 DESCRIPTION	-0003 START STATION	-0003 FINISH STATION	-0003 SIGNATURE	LM ITEM NO.
1	CABLE BLK	P1-A	P13-1	PROTECTIVE GROUND	P1-A	P13-1	PROTECTIVE GROUND	1	RED	P1-10	P13-3	RCVDE-XMTDE	24
2	RED	-H	-2	TRANSMITTED DATA	-H	-2	TRANSMITTED DATA	2	BLK	[5]	[5]	SGRD	
3	GRN	-10	-3	RECIEVED DATA	-10	-3	RECIEVED DATA	3	WHT	P1-K	P13-8	DCDE-RTSE	
4	WHT	-F	-4	REQUEST TO SEND	-C	-4	REQUEST TO SEND	4	BLK	[5]	[5]	SGRD	
5	BRN	-8	-5	CLEAR TO SEND	-8	-5	CLEAR TO SEND	5	GRN	P1-8	P13-5	CTSE-PCTSE	
6	BLU	-9	-6	DATA SET READY	-9	-6	DATA SET READY	6	BLK	[5]	[5]	SGRD	
7	ORG	-7	-7	SIGNAL GROUND	-7	-7	SIGNAL GROUND	7	BLU	P1-9	P13-6	DSRE-DTRE	
8	YEL	-K	-8	DATA CARRIER DETECT	-K	-8	DATA CARRIER DETECT	8	BLK	[5]	[5]	SGRD	
9	VIO	P1-6	P13-20	DATA TERMINAL READY	P1-6	P13-20	DATA TERMINAL READY	9	YEL	P1-6	P13-20	DTRE-DSRE	
10	CABLE GRAY			SPARE			SPARE	10	BLK	[5]	[5]	SGRD	
11	#22 AWG WHT	—	—	—	—	—	—	11	BRN	P1-H	P13-2	XMTDE-XCDUE	
								12	BLK	[5]	[5]	SGRD	24
								13	#22 AWG WHT	P13-18	P13-21	JUMPER	21

NOTES:
1. INSTALL RETAINING SPRING, ITEM 4, IN POSITIONS 1 & 3 (FRONT ENTRY OF CONNECTOR), ITEM 1.
2. PLACE TWO SCREWS (ITEM 19) IN BAG (ITEM 18) AND ATTACH TO CABLE. SCREWS ARE USED WHEN MOUNTING CONNECTOR (P1) TO MATING CONNECTOR.
3. AFFIX PLATE ID, ITEM 20 TO P13 (ITEM 12) ONLY WHEN REQUIRED BY WORK ORDER
4. MAKE TIE ON FAR SIDE
5. CONNECT ALL SGRD WIRES TO P1-7 OR P13-7 BUS BARS AND INSULATE WITH ITEM 25

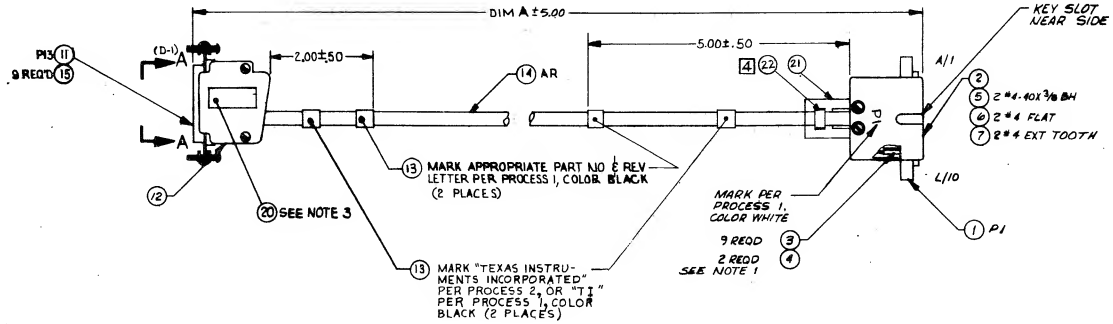

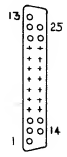

VIEW A-A
SCALE: NONE
(B-1)

REV	DESCRIPTION	DATE	APPD
C	11/8/71 M. Jarvis ECN 368622 REVISED L/M		
D	7-6-72 R. Bibb CU376180 ADDED: 1) REF DES. TO ITEMS 4 & 11 ON LM CHG: 1) ON LM & DWG ITEM 10 WAS 6.5	7-7-72	
	FORMAL RELEASE		
E	373508 (D) R. Piercy 5-25-73	5-30-73	
	1) ADDED DASH SCHEDULE E -0002		
F	382194 (C) R. Piercy 8-31-73	8-8-73	
	1) ADDED ITEM 16 TO -0001 & -0002 LM'S		
G	395868 (E) R. Wolcott 3-10-5		
	ADDED ITEM 17 TO -0001 & -0002 LM		
H	392131 (D) Richard Fairman 6-18-75		
	1) CHG: PICTORIAL AND ADDED NOTE 2. 2) ADDED IT. 18 TO LM -0001 & -0002. 3) CHG. IT. 5 ON LM'S -0001 & -0002. QTY. WAS 4. 4) ADDED IT. 19 TO LM -0001 & -0002.		
J	389984 (D) B. PALMER 12-9-75		
	CHANGED PER EXTENSIVE ENGR CHANGES		
K	405966 (D) R. Wolcott 1-26-76	1-29-76	
	ON -0001 & -0002 LM'S CHANGED ITEM 20, WAS P/N 362571-0001		
L	411556 (C) R. Esquivel 2-3-76	2-16-76	
	1) ADDED WIRE LIST -0003 & DIMENSION TABLE. 2) ADDED -0003 LM		
M	410088 (D) J. Hall 2-20-76	2-26-76	
	(1) LM: ITEM 5 P/N WAS 4/8293-18. DELETED; ITEM 8 WAS P/N 4/1115-44, QTY 2. ITEM 9 WAS P/N 230209-9000, QTY 1. ADDED ITEMS 21 & 22. (2) ADDED NOTE 4. (3) DIM 5.00±.50 WAS 2.00±.50		
N	408292 (D) Y. Baker 3-27-76		
	ADDED "OR TI PER PROCESS 1, COLOR BLACK 2 PLACES" ZONE C2		
P	407559 (C) R. Esquivel 10-1-76		
	ON LM-0003, ITEM 20 P/N WAS 362571-1		
R	420712 (C) D. Smith 1-19-77	1-24-77	
	(1) ADDED VIEW A-A		
T	CN 421299 C. Esquivel	5-2-77	
	(1) -3 DELE ITEM 14 PN 972444-1 QTY 31 (2) -3 ITEM 3 QTY WAS 9 (3) ADDED ITEM 24, 25, & 26 (4) ADDED NOTE 5 (5) REVISED -3 WIRE LIST		

DESCRIPTION	DIM A	PART NUMBER
CABLE ASSY, EIA INTERFACE -	360.00	955372-0001
CABLE ASSY, EIA INTERFACE - 1200 BAUD	77.00	955372-0002
CABLE ASSY EIA INTERFACE - 300 BAUD	77.00	955372-0003

1. HOT STAMP F-100, HEIGHT .12.
2. RUBBER STAMP F-100-E, HEIGHT .075 OR HOT STAMP, F100

LIST OF MATERIALS

PART NUMBER	DESCRIPTION	VENDOR PART NUMBER
7806		
8100		
8101		
5726 D	960978	
8764 D	997988	

TEXAS INSTRUMENTS
INDUSTRIAL PRODUCTS GROUP
ATTLEBORO, MASS.

CABLE ASSY, EIA INTERFACE
TERMINAL ASSY
100 AEB

SIZE D 955372

LM

B-95

PART NUMBER	REV	DESCRIPTION
0959372-0001	T	CABLE ASSY,EIA INTERFACE-300 BAUD
0959372-0002	T	CABLE ASSY,EIA INTERFACE-1200 BAUD

ITEM.	QUANTITY.	COMPONENT..	DESCRIPTION	UM
0001	00001.000	0232118-0075	HOUSING CONN.PC 10 DUAL POS PHENOLIC AMP - 58-963-2	EA
0001A			P1 AMP - 58-963-2	
0002	00001.000	0960914-0001	HOOD,I/O CONNECTOR 10 PIN - - -000	EA
0003	00005.000	0231553-0010	CONTACT LEAF 42717-3 AMP - 42-17-3	EA
0004	00002.000	0235411-0050	SPRING RETAINING 42973-3 AMP - 42-73-3	EA
0005	00002.000	0972988-0015	SCREW 4-40 X .375 PAN HEAD CRES	EA
0006	00002.000	0416622-0011	WASHER #4 FLAT QPL - A-960C4L	EA
0007	00002.000	0411101-0057	LOCKWASHER # 4 EXTERNAL TOOTH CRES QPL - M-35335-57	EA
0011	00001.000	0539409-0005	CONNECTOR,PLUG 25 PINS AMP - 20-208-1	EA
0011A			P13 AMP - 20-208-1	
0012	00001.000	0539903-0001	HOOD,CONN 25 PIN WITH RETAINERS AMP - 2-6478-3	EA
0013	00004.000	0418201-0000	STRAP,MARKER,ADJUSTABLE,PLASTIC QPL--S 33-8-1-9B	EA
0014	00006.500	0972444-0001	CABLE,10COND 22AWG UL LISTED	FT
0015	00009.000	0539430-0003	CONTACT,PIN 24-20AWG .068 INSUL DIA AMP - 20-202-2 ST	EA
0016	REF	0970653-9901	DIT-MCO TEST PROGRAM	EA
0017	REF	0981334-9901	UNIT TEST PROCEDURE,CABLE ASSY	EA
0018	00001.000	0532997-0012	BAG,POLYETHYLENE,HEAT SEALED	EA
0019	00002.000	0972988-0019	SCREW 4-40 X .750 PAN HEAD CRES	EA
0020	00001.000	0962571-0005	PLATE, ID, EDP CABLE	EA
0020A			ITEM 17A IS OPTIONAL	
0021	00001.000	0981301-0001	CABLE BRACKET 1209-1301-027	EA
0022	00001.000	0418212-0010	STRAP,TIEDOWN,ADJUSTABLE,PLASTIC QPL - M-3367-1-9	EA

959379 C

REVISIONS			
LTR	DESCRIPTION	DATE	APPD
B	370961 R. Quesada 6/26/72 DELETED -0002. TITLE OF -0001 WAS "CABLE ASSY, WHISPER FAN". ON LM, ITEM 2 WAS 235837-0045. FORMAL RELEASE	6/27/72	E.C.N.
C	380994 (D) L. Campos 3-23-73 WIRE LENGTH CHANGED FROM 12.00 TO 11.00	28MAR73	H. Tatum

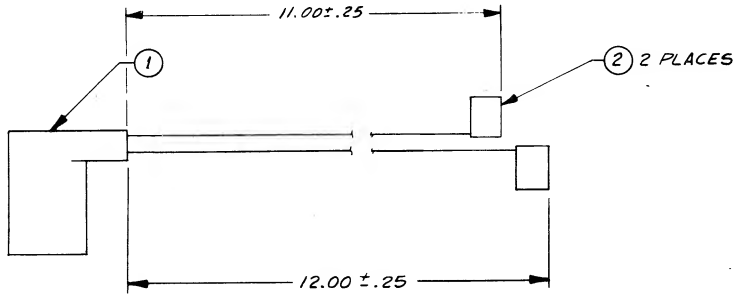

PART NUMBER	REV	DESCRIPTION
959379-0001	B	CABLE ASSY, WHISPER FAN

ITEM.	QUANTITY.	COMPONENT..	DESCRIPTION	UM
0001	00001.000	419741-0001	PLUG & CORD ASSY RTN-16415	EA
0002	00002.000	772163-0002	TERMINAL AWG 20-16 CRIMP FLAG TYPE SPT AMP-42800-2	EA

-0002 QTY REQD	-0001	ITEM NO.	UNIT OF ISSUE	DWG SIZE	PART NUMBER	DESCRIPTION	VENDOR PART NUMBER
					LIST OF MATERIALS		

UNLESS OTHERWISE SPECIFIED
DECIMAL .XX = .02 XXX = .010
FRACTIONAL = 1/64 ANGULAR = 1°
CONCENTRICITY MACHINED DIAMETERS .004 TIR
ALL DIMENSIONS TO BE MET BEFORE PLATING
REMOVE ALL BURRS AND SHARP EDGES
DO NOT SCALE THIS DRAWING
ALL DIMENSIONS IN INCHES
SURFACES MARKED ✓ TO HAVE ✓
DRILLED HOLE TOLERANCES
.013 TO .136 ± .003 .136 TO .250 ± .005 ± .003
.250 AND ABOVE = .005

PROCESSES: NONE

PROJ NO.	SIZE	NEXT ASSY DWG NO.
8726	E	959402

DRAFTSMAN 10/29/71 J. Tuttle
CHK. DRAFTSMAN 11/3/71
DESIGN ENGINEER 11/3/71
PROJ. ENGR. 11/3/71
APPR. MGR. 11/5/72
RELEASE 11/7/72

TEXAS INSTRUMENTS INCORPORATED
INDUSTRIAL PRODUCTS DIVISION
HOUSTON, TEXAS

TITLE: CABLE ASSY, WHISPER FAN
UNIT: TERMINAL ASSY
SYSTEM: 700 ASR
SCALE: NONE | C | 959379 | REV. C

LM

B-97

WIRE NO.	DESCRIPTION	START AT	END AT	REMARKS	LM ITEM NO.
1	#20 AWG	P10-1	E7		10
2	BLU	P10-2	E8		5
3	RED	P10-3	E12		8
4	BRN	P10-4	E9		2
5	YEL	P10-5	E10		7
6	BRN	P10-6	E13		4
7	GRY	P10-7	E6		11
8	ORN	P10-8	E11		6
9	#20 BLK PVC	P10-9	E4		3

NOTES:
1. E6 THRU E14 WIRES MAY LAY STRAIGHT RATHER THAN BE BENT 90° AS SHOWN. WIRE LENGTHS MUST BE THE SAME AS DIMENSIONED (E6 = 8.75±.25) AND WIRE ENDS MUST BE SPACED .30±.05 APART, TOLERANCES NONCUMULATIVE.

1	2	3
4	5	6
7	8	9

VIEW A-A

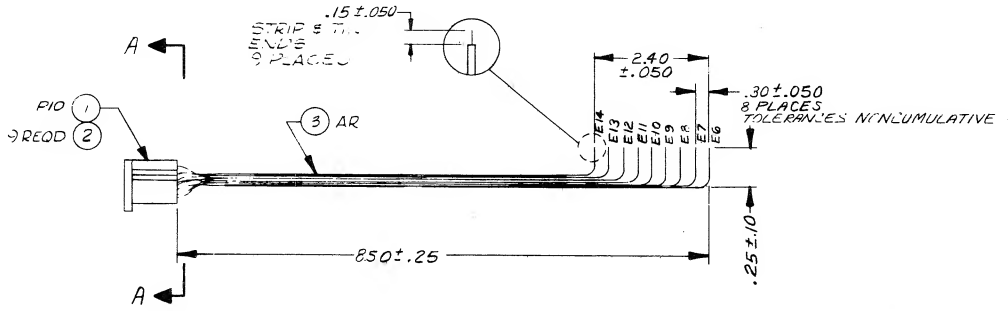

PART NUMBER	REV	DESCRIPTION
0959381-0001	G	CABLE ASSY,A.C POWER ASSY

ITEM.	QUANTITY.	COMPONENT..	DESCRIPTION	UM
0001	00001.000	0231253-0086	CONNECTOR 9P WHT CAP 480086-1 AMP -480086-1	EA
0001A			P10, AMP -480086-1	
0002	00009.000	0232142-0003	CONTACT #18-#22 WIRE AMP -42859-1	EA
0003	00006.000	0538347-4099	WIRE HOOKUP 8-20 AWG 19 STR BK/WH 1263-3679-000	FT
0004	00001.000	0538347-4199	WIRE HOOKUP 8-20 AWG 19 STR BN/WH JUD - HH0118	FT
0005	00001.000	0538347-4299	WIRE HOOKUP 8-20 AWG 19 STR RD/WH 1263-3679-000	FT
0006	00001.000	0538347-4399	WIRE HOOKUP 8-20 AWG 19 STR OR/WH 1263-3679-000	FT
0007	00001.000	0538347-4499	WIRE HOOKUP 8-20 AWG 19 STR YL/WH 1263-3679-000	FT
0008	00001.000	0538347-4599	WIRE HOOKUP 8-20 AWG 19 STR GN/WH JUD - HH0118	FT
0009	00001.000	0538347-4699	WIRE HOOKUP 8-20 AWG 19 STR BL/WH JUD - HH0118	FT
0010	00001.000	0538347-4799	WIRE HOOKUP 8-20 AWG 19 STR VI/WH JUD - HH0118	FT
0011	00001.000	0538347-4899	WIRE HOOKUP 8-20 AWG 19 STR GR/WH JUD - HH0118	FT

REVISIONS			
LTR	DESCRIPTION	DATE	APPD
A	374093 (D) 8 1. 4-24-72 1) NEXT ASSY WAS 959395 2) ITEM 3 WAS 236522-1000 3) ADDED WIRE LIST 4) .30 8 PLACES WAS .13 TYP 5) 2.40 DIM WAS 1.50 6) 7.50±.25 DIM WAS 8.00±.25 7) UNIT WAS A.C. POWER ASSY 8) ADDED VIEW A-A 9) REVISED CONNECTOR PICTORAL 9) REMOVED LU STATUS OF DNS		
	FORMY - RELEASE		
B	388782(L) 2-15-74 [illegible] ADD: 1.) IT. 4 TO LM 2.) NOTE 1 ZONE A 3 CHG: 1.) IT. 4 ZONE B1 WAS: "3 PLACES" 2.) STRIP LENGTH ZONE B2 WAS: .190±.050 3.) LM IT. 3 QTY. WAS: AR 4.) DIM. ZONE B3 WAS: .30±.050 8 PLACES DELETE: 1. TIE STRAP ZONE B2		
C	400294 (D) [illegible] [illegible] LENGTH WAS 7.50±.25 IN LM QTY IT 3 WAS 3 PL AR		
D	392148 (D) 7-5-74 A.K. IN NOTE 1 DIM E6 7.75±.25 TO E14 8.75±.		
E	416918 (D) J. [illegible] 11-4-76 DELETED ITEM 4 P/N WAS 235463-1		
F	CN4[illegible] [illegible] 1) ADD ITEMS 4 THRU 11 (2) REV. COLOR CODES		
G	CN4[illegible] 1) REVISED WIRE LIST [illegible] & ITEM NO		

WG SIZE	PART NUMBER	DESCRIPTION	VENDOR PART NUMBER

LIST OF MATERIALS

PROJ NO.	SIZE	NEXT ASSY DWG NO.
8726	D	960889

DRAFTSMAN 10-29-71 [illegible]
CHK. DRAFTSMAN 6-7-72 [illegible]
[illegible] 6-7-72
[illegible] 6-7-72
[illegible] 6-7-72
[illegible] 6-7-72

TEXAS INSTRUMENTS
INCORPORATED
INDUSTRIAL PRODUCTS DIVISION
HOUSTON, TEXAS

TITLE: CABLE ASSY, A.C. POWER
UNIT: RECTIFIER ASSY
DIVISION: 700 ASR
SCALE: NONE
SIZE: C
DWG NO: 959381

LM

WIRE NO.	DESCRIPTION	TOTAL LENGTH	START STA	FINISH STA	SIGNAL NAME	DASH NO.
1	22 AWG-BLK		P1-3	E1	MODL 2	-0001
2	RED		P1-C	E2	MODL 1	-0001
1	BLK		P1-L	E1	SIGNAL GND	-0002
2	22 AWG RED		P1-K	E2	DATA CARRIER DETECT	-0002

WIRE LIST CONT (B-4)

NOTES:
1. INSTALL SPRING (ITEM 4) IN POSITIONS 6,10,F, & L -0001 ONLY. INSTALL SPRING (ITEM 4) IN POSITIONS 1,8,10 & A -0002 ONLY
[2] INSTALL TWO CONNECTOR MOUNTING SCREWS (ITEM 16) IN HEAT SEALABLE BAGS (ITEM 15) AND SECURE AROUND CABLE IN APPROX. AREA SHOWN.
[3] CUT, GRN, WHT, BRN, BLU, ORG, YEL, VIO, AND GRAY WIRES OFF FLUSH WITH END OF CABLE SHEATH.

REVISIONS				
ZONE	LTR	DESCRIPTION	DATE	APPROVED
	A	382195(C) FRANK JETERSON	9-8-73	G.HEYNEN
	B	386486(D) C.TURNER	2-4-74	J.JETERSON
	C	396642(C) ANDY WILBORN	6-18-74	J.GEBHARDT
	D	395868(E) R. WHEELER	3-14-75	F.FELCHMAN
	E	392033(C) F. ESPINOZA	6-30-75	J.TANNER
	F	389986(D) F. ESPINOZA	1-5-76	L.VILLANUEVA
	G	408292(D) Y. BALES 3-27-76	4-6-76	
		1) ADDED "OR TI PER PROCESS 1, COLOR BLACK 2 PLACES" ZONE C3		

WIRE LIST CONT (D-4)

3	22 AWG-GRN	SPARE		SPARE		-0001 & -0002
4	- WHT					
5	- BRN					
6	- BLU					
7	- ORG					
8	- YEL					
9	- VIO					
10	22 AWG-GRY	SPARE		SPARE		

PART NO.	DESCRIPTION
959383-0002	CABLE ASSY RO-TTY INTERFACE
959383-0001	CABLE ASSY MODEM INTERFACE

2	1	ITEM NO	CODE IDENT	PART OR IDENTIFYING NUMBER	NOMENCLATURE OR DESCRIPTION	PROCUREMENT SPECIFICATION
QTY REQD						

PARTS LIST

PROCESSES:
1. HOT STAMP F-100, HEIGHT .2
2. RUBBER STAMP, F-100-2, HEIGHT .075 OR HOT STAMP, F-100.

UNLESS OTHERWISE SPECIFIED
- REMOVE ALL BURRS AND SHARP EDGES
- CONCENTRICITY MACHINED DIAMETERS .010 FIR
- DIMENSIONAL LIMITS APPLY BEFORE FINISH PROCESSING
- IDENTIFYING NUMBERS SHOWN IN PARENTHESES FOR REFERENCE ONLY
- INTERPRET DRAWING IN ACCORDANCE WITH MIL STD 100

HOLE TOLERANCE

.013 THRU .125 +.004 -.001	.126 THRU .250 +.005 -.001	.250 THRU .500 +.006 -.001
.501 THRU .750 +.008 -.001	.750 THRU 1.000 +.010 -.001	1.001 THRU 2.000 +.012 -.001

NEXT ASSY	USED ON
969605	8728
969604	8728
969602	8727
960973	8726
960972	8726

APPLICATION

UNLESS OTHERWISE SPECIFIED
- DIMENSIONS ARE IN INCHES
- TOLERANCES: ANGLES ± 1° 3 PLACE DECIMALS ±.010 2 PLACE DECIMALS ±.02

MATERIAL:

		DATE
DWN		
CHK	C. R. Williams	8/3/72
ENGR		8/14/72
QA		
APVD		8/14/72
CONTR NO		8/16/72
DESIGN ACTIVITY RELEASE		8/16/72

TEXAS INSTRUMENTS INCORPORATED
Equipment Group Dallas, Texas

CABLE ASSY, MODEM INTERFACE-ELECTRONIC PRINTER

SIZE	CODE IDENT NO	DRAWING NO
C	96214	959383
SCALE NONE	REV G	SHEET

LM

PART NUMBER	REV	DESCRIPTION.....
959383-0001	G	CABLE ASSY,MODEM INTERFACE

ITEM.	QUANTITY.	COMPONENT..	DESCRIPTION.....	UM
0001	00001.000	232118-0075	HOUSING CONN.PC 10 DUAL POS PHENOLIC AMP-582963-2	EA
0001A			P1 AMP-582963-2	
0002	00001.000	960914-0001	HOOD,I/O CONNECTOR 10 PIN - - -000	EA
0003	00002.000	231553-0010	CONTACT LEAF 42717-3 AMP-42717-3	EA
0004	00004.000	235411-0050	SPRING RETAINING 42973-3 AMP-42973-3	EA
0005	00002.000	972988-0015	SCREW 4-40 X .375 PAN HEAD CRES	EA
0006	00002.000	411027-0804	WASHER .125 X .312 X .032 FLAT CRES QPL- MS15795-804	EA
0007	00002.000	411101-0057	LOCKWASHER # 4 EXTERNAL TOOTH CRES QPL- MS35335-57	EA
0009	00001.000	418212-0010	STRAP,TIEDOWN,ADJUSTABLE,PLASTIC QPL- MS3367-1-9	EA
0010	00006.400	972444-0001	CABLE MULTI CONDUCTOR UL LISTED	FT
0011	00002.000	232361-0002	LUG #6 SPADE 41588 -41588	EA
0012	00004.000	418201-0001	STRAP,MARKER,ADJUSTABLE,PLASTIC QPL- MS3368-1-9	EA
0013	REF	970654-9901	DIT-MCD TEST PROGRAM	EA
0014	REF	981334-9901	UNIT TEST PROCEDURE,CABLE ASSY	EA
0015	00001.000	532997-0012	BAG,POLYETHYLENE,HEAT SEALED	EA
0016	00002.000	972988-0019	SCREW 4-40 X .750 PAN HEAD CRES	EA
0017	00001.000	981301-0001	CABLE BRACKET 1209-1301-017	EA

WIRE NO.	DESCRIPTION	START STATION	FINISH STATION	ITEM NO.	SIGNATURE
1	22 AWG-BLK	P1-E	E1	14	TTYL3
2	-RED	P1-F	E2	14	TTYL4
3	-GRN	P1-D	E3	14	TTYL2
4	-WHT	P1-4	E4	14	TTYL1
5	-BRN	SPARE			SPARE
6	-BLU				
7	-ORG				
8	-YEL				
9	-VIO				
10	22 AWG-GRY	SPARE			SPARE

NOTES:
1. INSTALL SPRING, IT 4, IN POSITIONS 1, 8, 9
2. CUT BRN, BLU, ORG, YEL, VIO, AND GRAY WIRES OFF FLUSH WITH ENDS OF CABLE SHEATH.
3. MAKE TIE ON FAR SIDE
4. PLACE 2 CONNECTOR MOUNTING SCREWS (ITEM 5) IN HEAT SEALABLE BAG (ITEM 19) AND SECURE TO CABLE NEAR P1

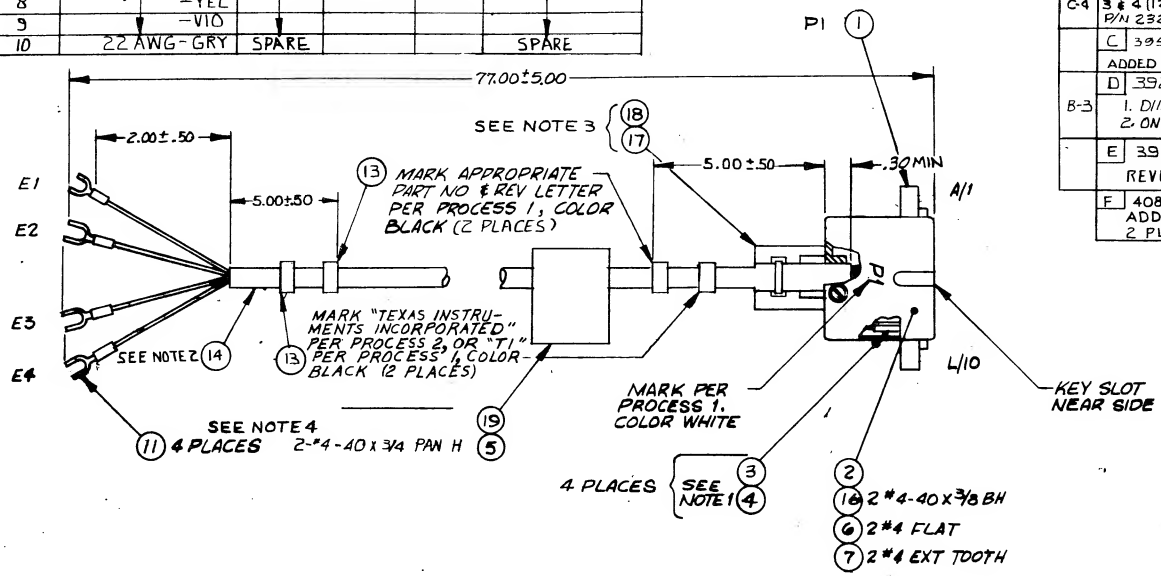

ZONE	LTR	DESCRIPTION	DATE	APPROVED
	A	382196(C) [illegible] 8-31-73 1. LM: ADDED IT. 15, DIT-MCD TEST PROCEDURE.	8-31-73	
	B	392447(D) M. Willett 11-8-74 ON LM: (1) IT 5 QTY WAS 4 (2) DELETED IT 8 & 9 (3) ADDED IT 16, 17, 18, 19 ON F/D: (4) ZONE C-4, DIM 2.00±.50 WAS 1.50±.10 (5) DIM .30 MIN WAS .30±.10 (6) DELETED 1.80±.10 DIM (7) ZONE C-2, DELETED IT 5 FROM P1 (8) IT 16 BALLOON WAS IT 5 (9) DELETED IT 8 BALLOON (10) ADDED IT 17 & 18, 19 & 5 (11) ADDED NOTES 3 & 4 (12) IT 14 BALLOON WAS "AR" (13) IT 8 WAS QTY 2 EA P/N 232452-0000 (13) IT 9 WAS QTY 0.2 FT P/N 236314-0090		
C-2 C-2 B-2 C-3 C-4				
	C	395868 (E) R. Willett 3-10-5 ADDED ITEM 20 TO LM	10 MAR 75	
B-3	D	392032(C) J. Espinosa 6-30-75 1. DIM # 4-40 X 3/4 PAN H WAS #4-40 X 5/8 B.H. 2. ON LM: IT. 5 WAS P/N 418293-0018.	7/15/75	
	E	391504 (D) J. Espinosa 12-9-75 REVISED PER ENGINEER CHANGES	12-10-75	
	F	408292 (D) Y. Salas 3-27-76 ADDED: "OR T.I. PER PROCESS 1, COLOR BLACK 2 PLACES" ZONE C3	3-22-76	

PROCESSES:
1. HOT STAMP F-100 HEIGHT .12
2. RUBBER STAMP, F-100-2- HEIGHT .075 OR HOT STAMP, F-100

PARTS LIST

-2 QTY REQD	-1 QTY REQD	ITEM NO	CODE IDENT	PART OR IDENTIFYING NUMBER	NOMENCLATURE OR DESCRIPTION	PROCUREMENT SPECIFICATION
				960973		8726
				960972		8726
				960971		8726
				960970		8726
				NEXT ASSY	USED ON	
				APPLICATION		

UNLESS OTHERWISE SPECIFIED
- REMOVE ALL BURRS AND SHARP EDGES
- CONCENTRICITY MACHINED DIAMETERS .010 FIR
- DIMENSIONAL LIMITS APPLY BEFORE FINISH PROCESSING
- IDENTIFYING NUMBERS SHOWN IN PARENTHESES FOR REFERENCE ONLY
- INTERPRET DRAWING IN ACCORDANCE WITH MIL-STD-100

HOLE TOLERANCE

.013 THRU .125 +.004 −.001	.126 THRU .250 ±.005 ±.001	.250 THRU .500 +.006 −.001
.501 THRU .750 +.008 −.001	.750 THRU 1.000 +.010 ±.001	1.001 THRU 2.000 +.012 −.001

UNLESS OTHERWISE SPECIFIED
- DIMENSIONS ARE IN INCHES
- TOLERANCES:
  ANGLES ± 1°
  3 PLACE DECIMALS ± .010
  2 PLACE DECIMALS ± .02

MATERIAL:

		DATE
DWN	T. Purcell	8/1/72
CHK	P. R. Williams	8/8/72
ENGR	Steve Ullrich	8/14/72
QA		
APVD	Ted Anderson	8/14/72
CONFIG	[illegible]	8/15/72
DESIGN ACTIVITY RELEASE	[illegible]	8/16/72

TEXAS INSTRUMENTS INCORPORATED
Equipment Group Dallas, Texas

CABLE ASSY, TTY INTERFACE

SIZE	CODE IDENT NO	DRAWING NO
C	96214	959384

SCALE NONE REV F SHEET

LM FILMED

959384 C

MAY 28, 1976

PART NUMBER	REV	DESCRIPTION.....
959384-0001	F	CABLE ASSY,TTY INTERFACE

ITEM.	QUANTITY.	COMPONENT..	DESCRIPTION.....	UM
0001	00001.000	232118-0075	HOUSING CONN.PC 10 DUAL POS PHENOLIC AMP-582963-2	EA
0001A			P1 AMP-582963-2	
0002	00001.000	960914-0001	HOOD,I/O CONNECTOR 10 PIN - - -000	EA
0003	00004.000	231553-0010	CONTACT LEAF 42717-3 AMP-42717-3	EA
0004	00004.000	235411-0050	SPRING RETAINING 42973-3 AMP-42973-3	EA
0005	00002.000	972988-0019	SCREW 4-40 X .750 PAN HEAD CRES	EA
0006	00002.000	411027-0804	WASHER .125 X .312 X .032 FLAT CRES QPL- MS15795-804	EA
0007	00002.000	411101-0057	LOCKWASHER # 4 EXTERNAL TOOTH CRES QPL- MS35335-57	EA
0011	00004.000	232361-0002	LUG #6 SPADE 41588 -41588	EA
0013	00004.000	418201-0001	STRAP,MARKER,ADJUSTABLE,PLASTIC QPL- MS3368-1-9	EA
0014	00006.400	972444-0001	CABLE MULTI CONDUCTOR UL LISTED	FT
0015	REF	970655-9901	DIT-MCO TEST PROGRAM	EA
0016	00002.000	972988-0015	SCREW 4-40 X .375 PAN HEAD CRES	EA
0017	00001.000	981301-0001	CABLE BRACKET 1209-1301-017	EA
0018	00001.000	418212-0010	STRAP,TIEDOWN,ADJUSTABLE,PLASTIC QPL- MS3367-1-9	EA
0019	00001.000	532997-0012	BAG,POLYETHYLENE,HEAT SEALED	EA
0020	REF	981334-9901	UNIT TEST PROCEDURE,CABLE ASSY	EA

WIRE NO	DESCRIPTION	START	FINISH	ITEM NO	REMARKS
1	#18 AWG, WHT	J13-1		4	INSTALL IT. 3
2	#18 AWG, WHT/BLK	J13-3		5	INSTALL IT. 3

REVISIONS

ZONE	LTR	DESCRIPTION	DATE	APPROVED
C3	A	381162 (D) J. Pearcey 5-30-73 1) ADDED ITEM 6 TO LM & F/D	6/4/73	
	B	382573 (D) R. Cantu 9-1-73 CHG'D CONNECTOR J13 PICTORIAL; WAS:	9/8/73	
	C	375182 (D) J. Espinoza 6-18-75 1) ON LM-0001 I.T.G. WAS AN 236314-0, OR 236315-0 #8 TUBING.	6-19-75	
	D	EN414850 Thomas Burnby	77/2/5	Henson
		2) ADDED TUBING DIMENSION 5.50±.25. POSITION OF TERMINAL WAS HORIZONTAL		

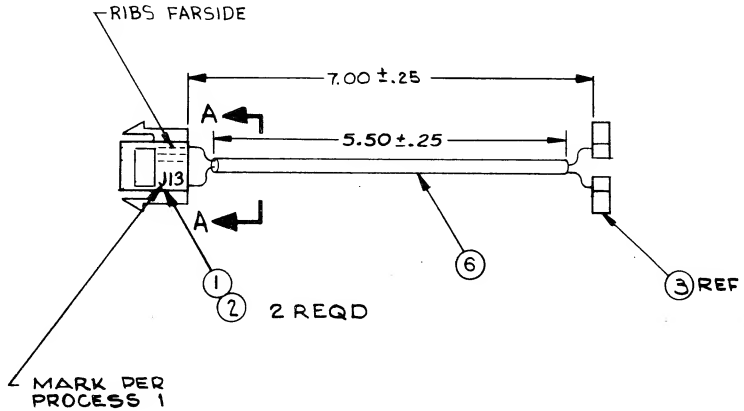

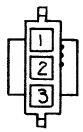

VIEW A-A
SCALE NONE

PROCESSES:
1. HOT STAMP PER F-100 HEIGHT .11, COLOR BLACK

-2 QTY REQD	-1	ITEM NO	CODE IDENT	PART OR IDENTIFYING NUMBER	NOMENCLATURE OR DESCRIPTION	PROCUREMENT SPECIFICATION

PARTS LIST

UNLESS OTHERWISE SPECIFIED
- REMOVE ALL BURRS AND SHARP EDGES
- CONCENTRICITY MACHINED DIAMETERS .010 FIR
- DIMENSIONAL LIMITS APPLY BEFORE FINISH PROCESSING
- IDENTIFYING NUMBERS SHOWN IN PARENTHESES FOR REFERENCE ONLY
- INTERPRET DRAWING IN ACCORDANCE WITH MIL-STD-100

HOLE TOLERANCE

.013 THRU .125 ± .004 ± .001	.126 THRU .250 ± .005 ± .001	.250 THRU .500 ± .006 ± .001
.501 THRU .750 ± .008 ± .001	.750 THRU 1.000 ± .010 ± .001	1.001 THRU 2.000 ± .012 ± .001

8734
959395 8726
NEXT ASSY USED ON
APPLICATION

UNLESS OTHERWISE SPECIFIED
- DIMENSIONS ARE IN INCHES
- TOLERANCES: ANGLES ± 1° 3 PLACE DECIMALS ± .010 2 PLACE DECIMALS ± .02

MATERIAL:

	DATE
DWN	6-27-72
CHK	7/11/72
ENGR	7-12-72
QA	7/14/72
APVD	7/12/72
CONTR NO.	7/14/72
DESIGN ACTIVITY RELEASE	7-14-72

TEXAS INSTRUMENTS INCORPORATED
Equipment Group Dallas, Texas

CABLE ASSEMBLY, ASR FAN

SIZE	CODE IDENT NO	DRAWING NO
C	96214	960071

SCALE NONE SHEET 1 - 1

960071 C

LM

FILMED

MAY 13, 1977 LIST OF MATERIAL

PART NUMBER	REV	DESCRIPTION
0960071-0001	D	CABLE ASSY,ASR FAN

ITEM.	QUANTITY.	COMPONENT..	DESCRIPTION	UM
0001	00001.000	0231254-0007	CONNECTOR 3P WHT PLUG 480149-1 AMP - 48-149-1	EA
0001A			J13 AMP - 48-149-1	
0002	00002.000	0232142-0003	CONTACT #18-#22 WIRE AMP - 42-59-1	EA
0003	00002.000	0772163-0002	TERMINAL AWG 20-16 CRIMP FLAG TYPE SPT AMP - 42-00-2	EA
0004	AR	0538347-5999	WIRE HOOKUP B-18 AWG 19 STR WHITE JUD - H-0203	FT
0005	AR	0538347-5099	WIRE HOOKUP B-18 AWG 19 STR BK/WH JUD - H-0203	FT
0006	AR	0411634-1700	SLEEVE,PVC, .166 DIA. BLACK QPL - M-L-1-631	FT

WIRE NO.	DESCRIPTION	TOTAL LENGTH	START STATION	FINISH STATION	ITEM NO.	SIGNATURE
1	#22 AWG BLK		P1 - A	P13 - 1	14	PROTECTIVE GROUND
2	RED		- H	- 2		TRANSMITTED DATA
3	GRN		- 10	- 3		RECEIVED DATA
4	WHT		- D	-22		RING INDICATOR
5	BRN		- 8	- 5		CLEAR TO SEND
6	BLU		- 9	- 6		DATA SET READY
7	ORG		- 7	- 7		SIGNAL GROUND
8	YEL		- K	- 8		DATA CARRIER DETECT
9	#22 AWG VIO		P1 - E	P13 - 20	14	DATA TERMINAL READY
10	#22 AWG GRY					SPARE

NOTES:

1. INSTALL RETAINING SPRING, ITEM 4, IN POSITIONS 1 & 3 (FRONT ENTRY OF CONNECTOR, ITEM 1
2. INSTALL TWO CONNECTOR MOUNTING SCREWS (ITEM 17) TO BAG (ITEM 16) AND SECURE AROUND CABLE APPROX. AREA SHOWN.
3. MAKE TIE ON FAR SIDE

LTR	DESCRIPTION	DATE	APPD
A	402105 (D) [illegible] 2-8-75 ON LM: 1) IT.5 QTY WAS 4. 2) ADDED IT 16 & 17. ON F/D: 1) ADDED NOTE 2. 2) ZONE 5-2, MAKE ITEM 16 & 17 CALLOUT REF TO NOTE 2 & ITEM 17 DESCRIPTION. 3) CORRECTED PICTORIAL PER SH 2 OF LCN# 402105.	7/16/75	[illegible]
B	391507 (D) Z PALMER 12-9-75 CHANGED PER EXTENSIVE ENGR. CHANGES	12-10-75	[illegible]
C	410089 (D) J Aill 2-13-76 1) LM. ITEM 5 WAS 2-0/418293-0018/SCREW 4-40 UNC-2A X .625 PAN HEAD CRESS. DELETED ITEM 8, (411115-44 HEX NUT) & ITEM 9. (230209-9000, SNAP BUSHING. ADDED ITEM 18 & 19 2) DWG. ZN 8-2 DIM 2.00±.015 REMOVED. ZN 3-8.C. CHANGED (5) FROM 5/8 TO 3/8. REMOVED (8) 2# 4-40 HEX & (9)#. ADDED NOTE 3. ADDED ITEM 18 & 19	2-19-76	[illegible]
D	408292 (D) [illegible] 3-27-76 ADDED: "OR TI PER PROCESS 1, COLOR BLACK 2 PLACES" ZONE C2	3-27-76	[illegible]

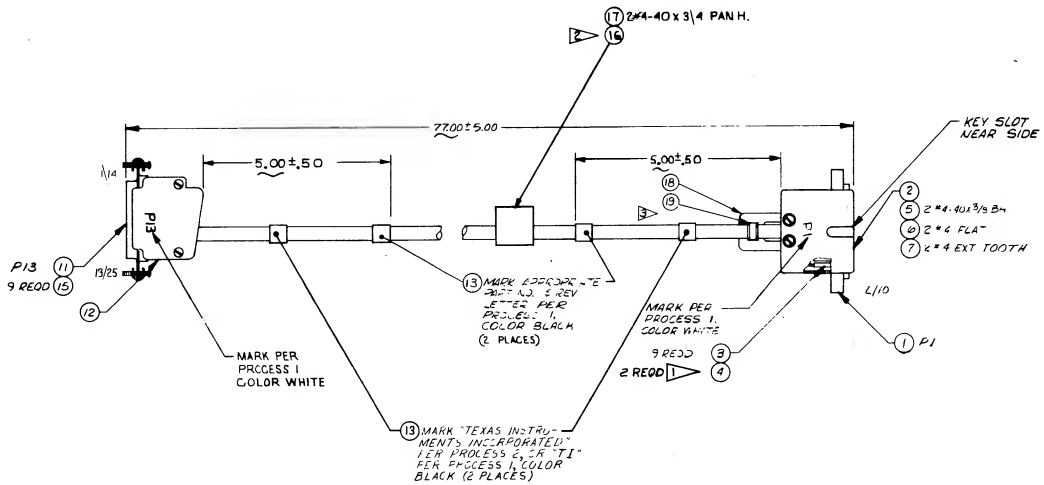

-0802	-0801	ITEM NO.	UNIT OF ISSUE	DWG SIZE	PART NUMBER	DESCRIPTION	VENDOR PART NUMBER
QTY REQD						LIST OF MATERIALS	

UNLESS OTHERWISE SPECIFIED
DECIMAL .XX = .02 .XXX = .010
FRACTIONAL ± 1/64 ANGULAR ± 1
CONCENTRICITY MACHINED DIAMETERS .004 TIR
ALL DIMENSIONS TO BE MET BEFORE PLATING
REMOVE ALL BURRS AND SHARP EDGES
DO NOT SCALE THIS DRAWING
ALL DIMENSIONS IN INCHES
SURFACES MARKED ✓ TO HAVE ✓
DRILLED HOLE TOLERANCES
.013 TO .136 = .002 .136 TO .250 = .005 .250 AND ABOVE = .005

PROCESSES
1. HOT STAMP F-100, HEIGHT .12.
2. RUBBER STAMP, F-100-2, HEIGHT .075 OR HOT STAMP, F-100

PROJ NO.	SIZE	NEXT ASSY DWG NO.
8726	D	960984

TEXAS INSTRUMENTS INCORPORATED INDUSTRIAL PRODUCTS DIVISION HOUSTON, TEXAS

TITLE CABLE ASSY, 800 BAUD AUTO ANSWER-EIA

SIZE D 971555 B

FILMED

PART NUMBER	REV	DESCRIPTION.....
971555-0001	D	CABLE ASSY,300 BAUD AUTO ANSWER-EIA

ITEM.	QUANTITY.	COMPONENT..	DESCRIPTION.....	UM
0001	00001.000	232118-0075	HOUSING CONN.PC 10 DUAL POS PHENOLIC AMP-582963-2	EA
0002	00001.000	960914-0001	HOOD,I/O CONNECTOR 10 PIN - - -000	EA
0003	00009.000	231553-0010	CONTACT LEAF 42717-3 AMP-42717-3	EA
0004	00002.000	235411-0050	SPRING RETAINING 42973-3 AMP-42973-3	EA
0005	00002.000	972988-0015	SCREW 4-40 X .375 PAN HEAD CRES	EA
0006	00002.000	411027-0804	WASHER .125 X .312 X .032 FLAT CRES QPL- MS15795-804	EA
0007	00002.000	411101-0057	LOCKWASHER # 4 EXTERNAL TOOTH CRES QPL- MS35335-57	EA
0011	00001.000	539409-0005	CONNECTOR,PLUG 25 PINS AMP-205208-1	EA
0012	00001.000	539903-0001	HOOD,CONN 25 PIN WITH RETAINERS AMP- 206478-3	EA
0013	00004.000	418201-0001	STRAP,MARKER,ADJUSTABLE,PLASTIC QPL- MS3368-1-9	EA
0014	00006.500	972444-0001	CABLE MULTI CONDUCTOR UL LISTED	FT
0015	00009.000	539430-0003	CONTACT,PIN 24-20AWG .068 INSUL DIA AMP-205202-2 STRIP	EA
0016	00001.000	532997-0012	BAG,POLYETHYLENE,HEAT SEALED	EA
0017	00002.000	972988-0019	SCREW 4-40 X .750 PAN HEAD CRES	EA
0018	00001.000	981301-0001	CABLE BRACKET 1209-1301-017	EA
0019	00001.000	418212-0010	STRAP,TIEDOWN,ADJUSTABLE,PLASTIC QPL- MS3367-1-9	EA

NOTES:
1. INSTALL ITEM 6 BETWEEN CONTACT POSITIONS 2 + 3

ZONE	LTR	DESCRIPTION	DATE	APPROVED
	A	386172 (B) [illegible] CHG-UNIT 6 QTY WAS 2 DELETED 13 IN ZONE C 7 B-B 23 IN ZONE B 3 VIEW B-B ROTATED 90° CW	[illegible]	[illegible]
	B	388772 (D) C. [illegible] 1-24-74	2/6/74	[illegible]
		LM IT. 4 P/N WAS 236317-0000, QTY 3.3 FT		
	C	389293 (D) [illegible] 4-5-74	4-5-74	[illegible]
		ADDED DIMS. 3±.05 & 1.0±.1 ZONE 7C CHG: 1.) DIM. 45.0±1.0 ZONE 6C WAS: 44.0±1.0 2.) DIM. 42.0±.5 ZONE 5C WAS: 40.0±.5 3.) CONNECTOR P1 WAS ROTATED 90° CW 4.) IT. 4 QTY WAS: 3.0 FT DELETED DIM. .300 MAX - CABLE BEND TO EDGE OF [illegible]		

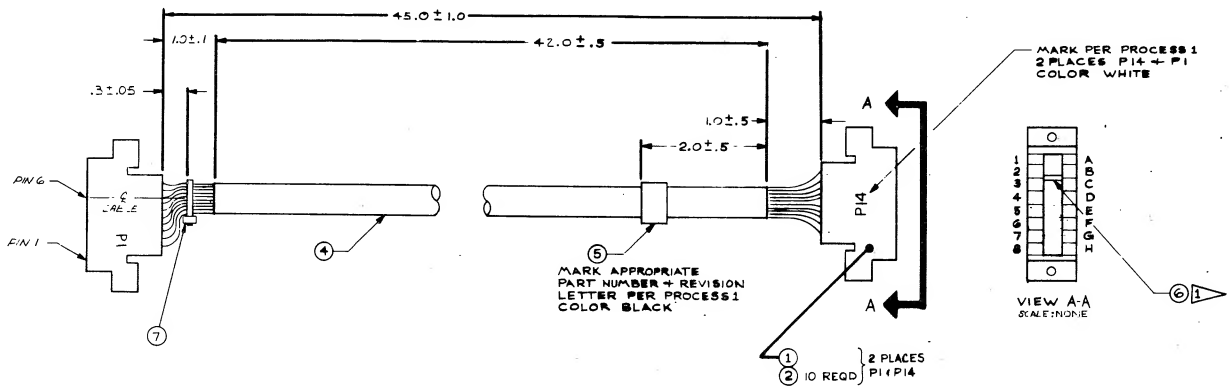

WIRE NO	DESCRIPTION	LM ITEM NO	START STATION	FINISH STATION
1	#22 AWG 1 PVC - WHT	3	P1 - 1	P14 - 1
2			2	2
3			3	3
4			4	4
5			5	5
6			7	7
7			C	C
8			D	D
9			F	F
10	#22 AWG 1 PVC - WHT	3	P1 - H	P14 - H

PROCESSES:

1. HOT STAMP PER F100, HEIGHT .12

QTY REQD -2	QTY REQD -1	ITEM NO	CODE IDENT	PART OR IDENTIFYING NUMBER	NOMENCLATURE OR DESCRIPTION	PROCUREMENT SPECIFICATION

PARTS LIST

UNLESS OTHERWISE SPECIFIED
- REMOVE ALL BURRS AND SHARP EDGES
- CONCENTRICITY MACHINED DIAMETERS .010 FIR
- DIMENSIONAL LIMITS APPLY BEFORE FINISH PROCESSING
- IDENTIFYING NUMBERS SHOWN IN PARENTHESES FOR REFERENCE ONLY
- INTERPRET DRAWING IN ACCORDANCE WITH MIL-STD-100

HOLE TOLERANCE

NEXT ASSY	USED ON
960984	8726

APPLICATION

UNLESS OTHERWISE SPECIFIED
- DIMENSIONS ARE IN INCHES
- TOLERANCES
ANGLES ±1°
3 PLACE DECIMALS ±.010
2 PLACE DECIMALS ±.02

MATERIAL:

DWN [illegible] DATE 12-21-72
CHK [illegible] 3/14/73
ENGR R. E. [illegible] 5-9-73
QA [illegible] 3/22/73
APPD [illegible] 3/2/73
CONTR NO
DESIGN ACTIVITY RELEASE [illegible] 4/2/73

TEXAS INSTRUMENTS INCORPORATED
Equipment Group Dallas, Texas

CABLE ASSEMBLY, OPTION PANEL DISPLAY

SIZE D | CODE IDENT NO 96214 | DRAWING NO 971556

SCALE NONE | REV. C | SHEET

D 971556

TI-7914E F8

PART NUMBER	REV	DESCRIPTION
571556-0001	C	CABLE ASSY,OPTION PANEL DISPLAY

ITEM.	QUANTITY.	COMPONENT..	DESCRIPTION	UM
C001	00002.000	231254-0008	CONNECTOR,HOUSING CONTACT 8 DUAL POS. AMP-582140-2	EA
C002	00020.000	231553-0010	CONTACT LEAF 42717-3 AMP-42717-3	EA
C003	00038.100	538347-3999	WIRE HOOKUP B-22 AWG 19 STR WHITE JUD- HH0115	FT
C004	00003.500	415780-0093	SLEEVE,VINYL .263 DIA BLACK .020 WALL QPL- MIL-I-7444C	FT
C005	00001.000	235463-0006	STRAP STD MKR BUNDLE DIA 0 TO 1-3/4 IN PND-SSM-2	EA
C006	00001.000	232183-1003	KEY,POLARIZING-PC BD. AMP-5825C1-1 530-940-0001 18342	EA
C007	00001.000	235463-0002	STRAP STANDARD BUNDLE DIA 0 TO 1-3/4 IN PND-SST-2	EA

WIRE NO.	DESCRIPTION	START STATION	FINISH STATION	ITEM NO.	SIGNAL NAME
1	22 AWG -BLK	P1-7	E1	14	SIGNAL GROUND
2	-RED	P1-E	E2	14	OFF HOOK
3	-GRN	P1-D	E3	14	RING INDICATOR
4	-WHT	P1-5	E4	14	COUPLER CUT THRU
5	-BRN	P1-6	E5	14	DATA ACCESS
6	-ORG	P1-C	E6	14	DATA TIP
7	-YEL	P1-3	E7	14	DATA RING
8	-BLU	P1-4	E8	14	SWITCH HOOK
9	-VIO	SPARE	SPARE		
10	22 AWG -GRY	SPARE	SPARE		

NOTES:
1. INSTALL SPRING, ITEM 4, IN POSITIONS 1, A, T, E, 9
2. [illegible] GRAY WIRE OFF FLUSH WITH ENDS OF CABLE SHEATH
3. MAKE TIE ON FARSIDE

NOTES CONT'D ZONE 4-B

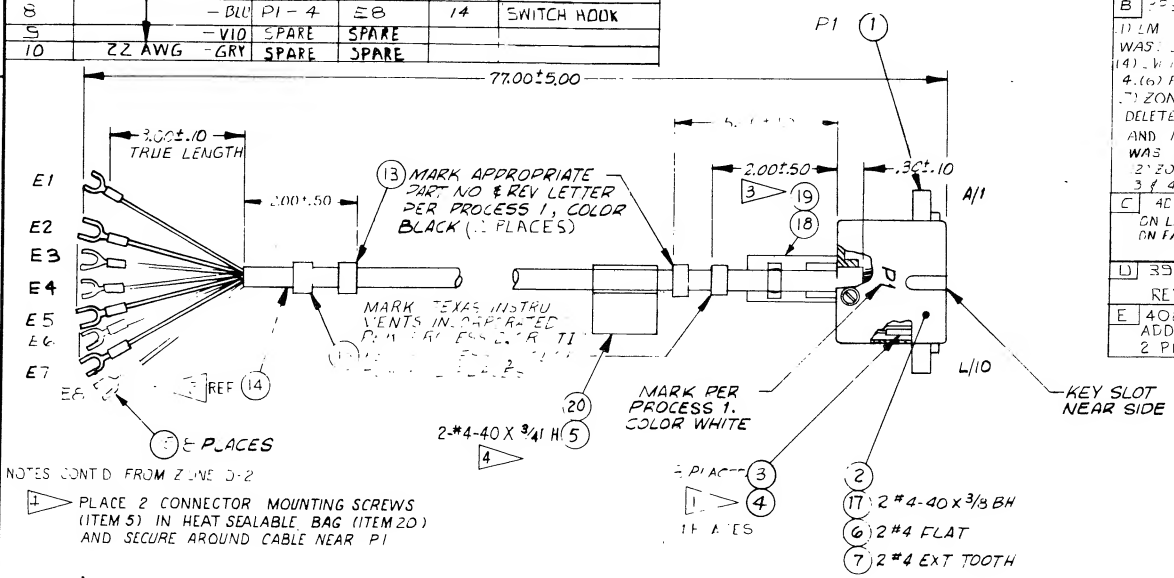

NOTES CONT'D FROM ZONE D-2

PLACE 2 CONNECTOR MOUNTING SCREWS (ITEM 5) IN HEAT SEALABLE BAG (ITEM 20) AND SECURE AROUND CABLE NEAR P1

17 2 #4-40 X 3/8 BH
6 2 #4 FLAT
7 2 #4 EXT TOOTH

PROCESSES:
1. HOT STAMP F-100 HEIGHT .2
2. RUBBER STAMP F-100-2 HEIGHT .075 OR HOT STAMP, F100

REVISIONS

ZONE	LTR	DESCRIPTION	DATE	APPROVED
	A	379722 (D) B.J. Myers 6-25-73 1) NOTE 2 WAS CUT BLUE, VIOLET AND GRAY WIRE OF FLUSH WITH ENDS OF CABLE SHEATH 2) ADDED WIRE 8 3) APPLICATION LIST, ADDED 973801 NEXT ASSY 8726 USED ON 4) ITEM 0003 QTY WAS 7 5) ITEM 0011 QTY WAS 7	6/25/73	
	B	393166 (C) [illegible] 12-9-74 (1) LM ADDED ITEMS 5, 7, 18, 19 & 20 (2) LM ITEM 11 P/N WAS: 232355-0300. (3) LM IT 8 P/N WAS 232452-0000. (4) LM IT 9 P/N WAS: 230209-9000. (5) LM IT 5 QTY WAS 4. (6) F/D ZONE 4-B BALLOON IT. 5 WAS (11) 8 PLACES. (7) ZONE 4 B DIM 3.00 ± .10 WAS 1.50 ± .10. (8) ZONE C-3 DELETED IT. 9 (9) ZONE C-3 ADDED IT 20 & 5 CALLOUTS AND IT. 18 & 19 CALLOUTS. (10) ZONE B-2 BALLOON IT. 17 WAS IT. 5 (11) ZONE B-2 DELETED BALLOON IT. 8 (12) ZONE D-2 DELETED BALLOON IT. 5 (13) ADDED NOTES 3 & 4.	12-18-74	R. Booth
	C	402103 (D) T Espinosa 7-17-75 ON LM: ITEM 5 WAS P/N 235028-0001 ON F/D: ITEM 5 CALLOUT CHG. DESCRIPTION FROM 5/8 BH TO 3/4 PAN H.	8-7-75	G. Ware
	D	391687 (D) T Espinosa 12-9-75 REVISED PER ENGINEER CHANGER	12-10-75	K. McLean
	E	408292 (D) V. Balao 3-27-76 ADDED: "OR TI PER PROCESS 1, COLOR BLACK 2 PLACES" ZONE C3	3-27-76	J. Lindsey

PARTS LIST

QTY REQD	ITEM NO	CODE IDENT	PART OR IDENTIFYING NUMBER	NOMENCLATURE OR DESCRIPTION	PROCUREMENT SPECIFICATION

UNLESS OTHERWISE SPECIFIED
- REMOVE ALL BURRS AND SHARP EDGES
- CONTOUR BY MACHINED DIAMETERS .010 FIR
- DIMENSIONAL LIMITS APPLY BEFORE FINISH PROCESSING
- IDENTIFYING NUMBERS SHOWN IN PARENTHESES FOR REFERENCE ONLY
- INTERPRET DRAWING IN ACCORDANCE WITH MIL STD 100

HOLE TOLERANCE

.013 THRU .125	.004 .001	.126 THRU 250	.005 .001	.251 THRU 500	.006 .001
.501 THRU 750	.008 .001	.751 THRU 1.000	.010 .001	1.001 THRU 2.000	.012 .001

973801	8726
960984	9726
NEXT ASSY	USED ON
APPLICATION	

UNLESS OTHERWISE SPECIFIED
- DIMENSIONS ARE IN INCHES
- TOLERANCES ANGLES ± 1°
- PLACE DECIMALS ± .010
- PLACE DECIMALS ± .02

MATERIAL

	DATE
DWN	3 FEB 73
CHK	3/12/73
ENGR	3-9-73
QA	3/24/73
APVD	3-30-73
CONTR NO	
DESIGN ACTIVITY RELEASE	4-2-73

TEXAS INSTRUMENTS INCORPORATED
Equipment Group Dallas, Texas

CABLE ASSY, AUTO ANSWER-300 BAUD, MODEM

SIZE	CODE IDENT NO	DRAWING NO
C	96214	971557

SCALE NONE REV SHEET

971557

LM

PART NUMBER	REV	DESCRIPTION
971557-0001	E	CABLE ASSY,AUTO ANSWER-300 BAUD,MODEM

ITEM.	QUANTITY.	COMPONENT..	DESCRIPTION	UM
0001	00001.000	232118-0075	HOUSING CONN.PC 10 DUAL POS PHENOLIC AMP-582963-2	EA
0002	00001.000	960914-0001	HOOD,I/O CONNECTOR 10 PIN - - -000	EA
0003	00008.000	231553-0010	CONTACT LEAF 42717-3 AMP-42717-3	EA
0004	00004.000	235411-0050	SPRING RETAINING 42973-3 AMP-42973-3	EA
0005	00002.000	972988-0019	SCREW 4-40 X .750 PAN HEAD CRES	EA
0006	00002.000	411027-0804	WASHER .125 X .312 X .032 FLAT CRES QPL- MS15795-804	EA
0007	00002.000	411101-0057	LOCKWASHER # 4 EXTERNAL TOOTH CRES QPL- MS35335-57	EA
0013	00004.000	418201-0001	STRAP,MARKER,ADJUSTABLE,PLASTIC QPL- MS3368-1-9	EA
0014	00006.400	972444-0001	CABLE MULTI CONDUCTOR UL LISTED	FT
0015	00008.000	972318-0001	LUG,SPADE #4-.558 L X.072 WD X.02 THK AMP--34248	EA
0017	00002.000	972988-0015	SCREW 4-40 X .375 PAN HEAD CRES	EA
0018	00001.000	981301-0001	CABLE BRACKET 1209-1301-017	EA
0019	00001.000	418212-0010	STRAP,TIEDOWN,ADJUSTABLE,PLASTIC QPL- MS3367-1-9	EA
0020	00001.000	532997-0012	BAG,POLYETHYLENE,HEAT SEALED	EA

WIRE NO.	DESCRIPTION		TOTAL LENGTH	START STATION	FINISH STATION	ITEM NO.	SIGNATURE
1	22 AWG	BLK	6.5	P1-A	P13-1	20	PROTECTIVE GROUND
2		RED		-H	-2		TRANSMITTED DATA
3		GRN		-10	-3		RECEIVED DATA
4		WHT		-F	-4		REQUEST TO SEND
5		BRN		-B	-5		CLEAR TO SEND
6	22 AWG	BLU	6.5	P1-B	P13-6	20	DATA SET READY
7	22 AWG	ORG	6.5	P1-7	P13-7	20	SIGNAL GROUND
8	22 AWG	YEL	6.5	P1-F	P13-20	20	REQUEST TO SEND
9	22 AWG TPKC	WHT	3.0	P1-K	P1-K	16	DATA TERMINAL READY
10	22 AWG	VIO	6.5	SPARE		20	
11	22 AWG	GRY	6.5	SPARE		20	

NOTES:
1. INSTALL RETAINING SPRING, ITEM 4, IN POSITIONS 1 & 3 FRONT ENTRY OF CONNECTOR, ITEM 1
2. PIN G & PIN K ARE TIED TOGETHER AT START STATION (P1 END) ONLY.
3. MAKE TIE ON FAR SIDE.
4. PLACE 2 CONNECTOR MOUNTING SCREWS (ITEM 5) IN HEAT SEALABLE BAG (ITEM 19) AND SECURE AROUND CABLE NEAR P1.

REVISIONS

ZONE	LTR	DESCRIPTION	DATE	APPROVED
	A	391146 (B) Andy Wilson 7-16-74 ADDED: 1) WIRE #8 TO WIRE LIST CHANGED: 1) ITEM 3 QTY WAS 9 2) ITEM 14 QTY WAS 52 3) ITEM 15 QTY WAS 7	7-17-74	
	B	392435 (D) R Wilson 12-4-74 (1) LM IT 5 QTY WAS 4 (2) IT. 8 P/N WAS 232452-0000; (3) IT 9 P/N WAS 230209-9000. (4) ADDED IT. 16, 17, 18 (5) ADDED NOTES 3 & 4. ON F/D (6) ZONE C-5 ADDED BALLOON ITEMS 5 & 19. 16 & 17, (7) ZONE C-5 DELETED BALLOON IT. 9 (8) ZONE C-4 BALLOON IT. 18 WAS (5) 2"#4-40 X 3/8 BH (9) ZONE C-4 DELETED BALLOON IT 8 (10) ZONE C-4 P1 WAS:	SDEC 76	
	C	402102 D 7 Engineer 7-2-75 1) ON LM. CHG. IT 5 WAS P/N 412293-0018. 2) ON F/D, ZONE C-5, CHG. IT 5 FROM 3/8 B.H. TO 3/4 PAN H. ZONE C-4 DELETED IT 5 & 8.	7-9-75	
	D	389985 (D) A. Nelson 12-9-75 1) REVISED WITH EXTENSIVE CHANGES		
	E	408292 (D) Y. Baker 3-27-76 ADDED "OR TI PER PROCESS 1, COLOR BLACK 2 PLACES" ZONE B6	3-27-76	

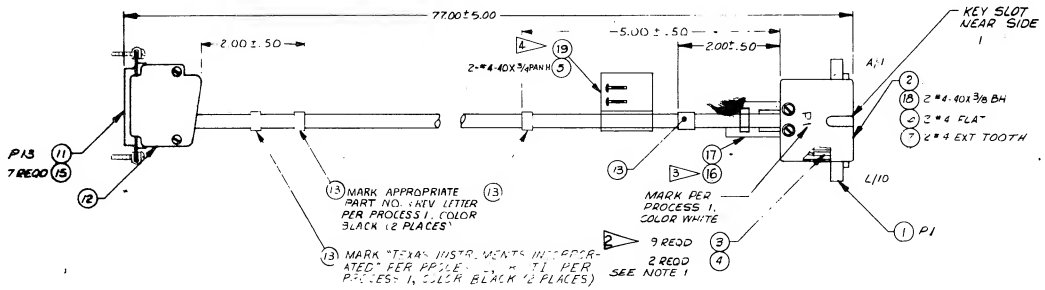

QTY REQD	ITEM NO	CODE IDENT	PART OR IDENTIFYING NUMBER	NOMENCLATURE OR DESCRIPTION	PROCUREMENT SPECIFICATION

PARTS LIST

UNLESS OTHERWISE SPECIFIED
- REMOVE ALL BURRS AND SHARP EDGES
- CONCENTRICITY MACHINED DIAMETERS .010 FIR
- DIMENSIONAL LIMITS APPLY BEFORE FINISH PROCESSING
- IDENTIFYING NUMBERS SHOWN IN PARENTHESES FOR REFERENCE ONLY
- INTERPRET DRAWING IN ACCORDANCE WITH MIL-STD-100

HOLE TOLERANCE

.013 THRU .128	+.004 -.001	.126 THRU .250	+.005 -.001
.251 THRU .500	+.006 -.001	.501 THRU .780	+.008 -.001
.781 THRU 1.000	+.010 -.001	1.001 THRU 2.000	+.015 -.001

860977	8726
860976	8726
360978	8726
360974	9726
NEXT ASSY	USED ON
APPLICATION	

UNLESS OTHERWISE SPECIFIED
- DIMENSIONS ARE IN INCHES
- TOLERANCES ANGLES ±1°
  3 PLACE DECIMALS ±.010
  2 PLACE DECIMALS ±.02

MATERIAL:
1. HOT STAMP F-100 HEIGHT .12
2. RUBBER STAMP F-100-2 HEIGHT .075 OR HOT STAMP, F-100

DWN		DATE 6-18-73
CHK	R. Booth I	6/23/73
ENGR	R. L. Olsen	6/27/73
QA		
APVD	G. Kirkland	10/18/73
CONTR NO	W. G. Smith	11/9/73
DESIGN ACTIVITY		11/9/73

TEXAS INSTRUMENTS INCORPORATED
Equipment Group, Austin, Texas

CABLE ASSY,
BELL 113A INTERFACE

SIZE	CODE IDENT NO	DRAWING NO
D	96214	971558

SCALE 1/1 REV E SHEET 1 OF 1

LM

FILED

B-111

D 971558

PART NUMBER	REV	DESCRIPTION.....
971558-0001	E	CABLE ASSY,BELL 113A INTERFACE

ITEM.	QUANTITY.	COMPONENT..	DESCRIPTION.....	UM
0001	00001.000	232118-0075	HOUSING CONN.PC 10 DUAL POS PHENOLIC AMP-582963-2	EA
0001A			P1 AMP-582963-2	
0002	00001.000	960914-0001	HOOD,I/O CONNECTOR 10 PIN - - -000	EA
0003	00010.000	231553-0010	CONTACT LEAF 42717-3 AMP-42717-3	EA
0004	00002.000	235411-0050	SPRING RETAINING 42973-3 AMP-42973-3	EA
0005	00002.000	972988-0019	SCREW 4-40 X .750 PAN HEAD CRES	EA
0006	00002.000	411027-0804	WASHER .125 X .312 X .032 FLAT CRES QPL- MS15795-804	EA
0007	00002.000	411101-0057	LOCKWASHER # 4 EXTERNAL TOOTH CRES QPL- MS35335-57	EA
0011	00001.000	539409-0005	CONNECTOR,PLUG 25 PINS AMP-205208-1	EA
0011A			P13 AMP-205208-1	
0012	00001.000	539903-0001	HOOD,CONN 25 PIN WITH RETAINERS AMP- 206478-3	EA
0013	00004.000	418201-0001	STRAP,MARKER,ADJUSTABLE,PLASTIC QPL- MS3368-1-9	EA
0014	00000.250	538347-3999	WIRE HOOKUP B-22 AWG 19 STR WHITE JUD- HH0115	FT
0014A			"WIRE NO.9" JUD- HH0115	
0015	00008.000	539430-0003	CONTACT,PIN 24-20AWG .068 INSUL DIA AMP-205202-2 STRIP	EA
0016	00001.000	981301-0001	CABLE BRACKET 1209-1301-017	EA
0017	00001.000	418212-0010	STRAP,TIEDOWN,ADJUSTABLE,PLASTIC QPL- MS3367-1-9	EA
0018	00002.000	972988-0015	SCREW 4-40 X .375 PAN HEAD CRES	EA
0019	00001.000	532997-0012	BAG,POLYETHYLENE,HEAT SEALED	EA
0020	00006.500	972444-0001	CABLE MULTI CONDUCTOR UL LISTED	FT

WIRE NO	DESCRIPTION	TOTAL LENGTH	START STATION	FINISH STATION	ITEM NO
1	22 AWG IPVC WHT	77.00	P1-6	P13-20	14
2	↓	↓	-H	-2	↓
3			-10	-3	
4			-F	-4	
5			-8	-5	
6			-9	-6	
7			-7	-7	
8			-K	-8	
9			-A	P13-1	
10			-A	P14-1	
11			-4	-3	
12			-B	-5	
13			-C	-6	
14			-3	-7	
15	↓	↓	-5	-8	↓
16	22 AWG IPVC WHT	77.00	P1-1	P14-2	14

NOTES
1. INSTALL TWO CONNECTOR MOUNTING SCREWS (ITEM 20) INTO HEAT SEALABLE BAG (ITEM 19) AND SECURE AROUND CABLE IN APPROXIMATE AREA SHOWN.
2. MAKE TIE ON FARSIDE

ZONE	LTR	REVISIONS DESCRIPTION	DATE	APPROVED
	A	391139 4-18-74	4/18/74	
B-4		1) ADDED IT 19 TO LM AND TO F/D. ADDED CALLOUT 5 TO CALLOUT 19. 2) DELETED CALLOUT 5 FROM		
B-3		CALLOUT 1. 3) ADDED NOTE 1. 4) DELETED TABS ON CONNECTOR P1 WAS ___ BOTH SIDES		
		FORMAL RELEASE		
	B	398862(D) 10-28-74 ADDED: 1) ITEMS 20, 21 & 22; 2) NOTE 2 CHG: 1) QTY OF ITEM 5 WAS 4 DELETED: 1) ITEM 8 WAS QTY 2, P/N 232452-0000 2) ITEM 9 WAS QTY 1, P/N 230209-9000	10/30/74	
	C	402104(D) 7-2-75	7-10-75	
B-4		1. ON LM IT. 5 WAS P/N 418293-0018. 2. ON F/D CHG. (5) FROM 5/8 BH TO 3/4 PAN H.		

PROCESSES:
1. HOT STAMP F-100, HEIGHT .12

UNLESS OTHERWISE SPECIFIED
- REMOVE ALL BURRS AND SHARP EDGES
- CONCENTRICITY MACHINED DIAMETERS .010 FIR
- DIMENSIONAL LIMITS APPLY BEFORE FINISH PROCESSING
- IDENTIFYING NUMBERS SHOWN IN PARENTHESES FOR REFERENCE ONLY
- INTERPRET DRAWING IN ACCORDANCE WITH MIL-STD-100

HOLE TOLERANCE
.013 THRU .125 +.004 -.001; .126 THRU .250 +.005 -.001; .251 THRU .500 +.006 -.001; .501 THRU .750 +.006 -.001; .751 THRU 1.000 +.010 -.001; 1.001 THRU 2.000 +.012 -.001

NEXT ASSY	USED ON
969619	8726

APPLICATION

UNLESS OTHERWISE SPECIFIED
- DIMENSIONS ARE IN INCHES
- TOLERANCES ANGLES ±1° 3 PLACE DECIMALS ±.010 2 PLACE DECIMALS ±.02

MATERIAL:

QTY REQD -2	-1	ITEM NO	CODE IDENT	PART OR IDENTIFYING NUMBER	NOMENCLATURE OR DESCRIPTION	PROCUREMENT SPECIFICATION

PARTS LIST

DWN J. Piercy 12-12-73
CHK 17 JAN 74
1/17/74
QA
APVD
CONTR NO 4/24/74
DESIGN ACTIVITY RELEASE 9/24/74

TEXAS INSTRUMENTS INCORPORATED Equipment Group Dallas, Texas

CABLE ASSY, EIA/ACOUSTIC COUPLER

SIZE	CODE IDENT NO	DRAWING NO
D	96214	973254

SCALE 1/1 REV C SHEET

LM FILMED TI-7914 E P4

D 973254

PART NUMBER	REV	DESCRIPTION
973254-0001	C	CABLE ASSY,EIA/ACOUSTIC COUPLER

ITEM.	QUANTITY.	COMPONENT..	DESCRIPTION	UM
C001	00001.000	232118-0075	HOUSING CONN.PC 10 DUAL POS PHENOLIC AMP-582963-2	EA
C001A			P1 AMP-582963-2	
C002	00001.000	960914-0001	HOOD,I/O CONNECTOR 10 PIN - - -000	EA
C003	00016.000	231553-0010	CONTACT LEAF 42717-3 AMP-42717-3	EA
C005	00002.000	418293-0019	SCREW 4-40 UNC-2A X .750 PAN HEAD CRES QPL- MS1957-19	EA
C006	00002.000	411027-0804	WASHER .125 X .312 X .032 FLAT CRES QPL- MS15795-804	EA
C007	00002.000	411101-0057	LOCKWASHER # 4 EXTERNAL TOOTH CRES QPL- MS35335-57	EA
C010	00013.000	415780-0093	SLEEVE,VINYL .263 DIA BLACK .020 WALL QPL- MIL-I-7444C	FT
C011	00001.000	539409-0005	CONNECTOR,PLUG 25 PINS AMP-205208-1	EA
C011A			P13 AMP-205208-1	
C012	00002.000	539503-0001	HOOD,CONN 25 PIN WITH RETAINERS AMP-206478-3	EA
C013	00001.000	235463-0006	STRAP STD MKR BUNDLE DIA 0 TO 1-3/4 IN PND-SSM-2	EA
C014	00116.000	538347-3999	WIRE HOOKUP B-22 AWG 19 STR WHITE JUD- HH0115	FT
C015	00009.000	539430-0003	CONTACT,PIN 24-20AWG .068 INSUL DIA AMP-205202-2 STRIP	EA
C016	00001.000	539409-0006	CONNECTOR,RCPT 25 PINS AMP-205207-1	EA
C016A			P14 AMP-205207-1	
C017	00007.000	539430-0004	CONTACT,SOCKET 24-20AWG .068 INSUL DIA AMP-205201-3 STRIP	EA
C018	REF	970658-9901	TEST PROC,DITMCO-EIA COUP INTRF CABLE	EA
C019	00001.000	532997-0012	BAG,POLYETHYLENE,HEAT SEALED	EA
0020	00001.000	981301-0001	CABLE BRACKET 1209-1301-007	EA
C021	00001.000	235463-0002	STRAP STANDARD BUNDLE DIA 0 TO 1-3/4 IN PND-SST-2	EA
C022	00002.000	418293-0015	SCREW 4-40 UNC-2A X .375 PAN HEAD CRES QPL- MS1957-15	EA

WIRE NO	DESCRIPTION	START STATION	FINISH STATION	ITEM NO.
1	22 AWG IPVC WHT	P1-1	P1-H	4
2	↕	P1-4	P1-10	↕
3		P1-8	P1-B	
4	↕	P1-9	P1-C	↕
5	22 AWG IPVC WHT	P1-5	P1-K	4

NOTES:

[1] INSTALL RETAINING SPRINGS (IT.6) IN POSITIONS A & L (FRONT ENTRY OF CONNECTOR)

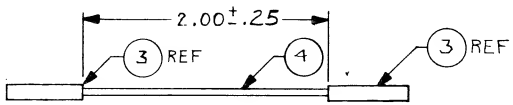

VIEW A
SCALE: NONE
(5 REQ'D)

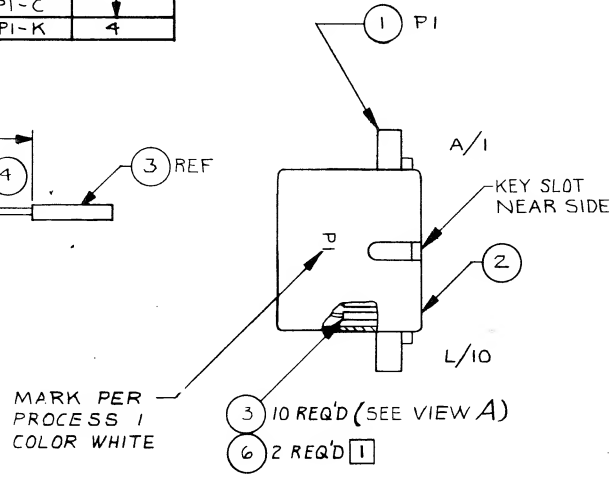

PROCESSES:
1. HOT STAMP F-100, HEIGHT .12

ZONE	LTR	DESCRIPTION	DATE	APPROVED
	A	391138 (E) 4-18-74	4/24/74	
C-3		1.) DELETED IT. 5 FROM LM AND F/D, P/N WAS 235028-0001, QTY WAS 2. (2.) DELETED P/N MARKING FROM CONN, WAS STAMPED BELOW P1.		
C-465		3.) DIM 2.00±.25 WAS EXTENDED TO EACH END OF VIEW. 4. DELETED TABS ON CONN. WAS BOTH SIDE.		
		FORMAL RELEASE		
	B	403266 (D) J Zapinga 6-4-75	6-10-75	
		1. ADDED IT. 7 PROGRAM NUMBER TO LM.		

-2 QTY REQD	-1 QTY REQD	ITEM NO	CODE IDENT	PART OR IDENTIFYING NUMBER	NOMENCLATURE OR DESCRIPTION	PROCUREMENT SPECIFICATION
					PARTS LIST	

UNLESS OTHERWISE SPECIFIED
- REMOVE ALL BURRS AND SHARP EDGES
- CONCENTRICITY MACHINED DIAMETERS .010 FIR
- DIMENSIONAL LIMITS APPLY BEFORE FINISH PROCESSING
- IDENTIFYING NUMBERS SHOWN IN PARENTHESES FOR REFERENCE ONLY
- INTERPRET DRAWING IN ACCORDANCE WITH MIL STD 100

HOLE TOLERANCE

.013 THRU .125 ± .004 ± .001	.126 THRU .250 ± .005 ± .001	.251 THRU .500 ± .006 ± .001
.501 THRU .750 ± .008 ± .001	.751 THRU 1.000 ± .010 ± .001	1.001 THRU 2.000 ± .012 ± .001

969619	.8726
NEXT ASSY	USED ON
APPLICATION	

UNLESS OTHERWISE SPECIFIED
- DIMENSIONS ARE IN INCHES
- TOLERANCES: ANGLES ± 1° 3 PLACE DECIMALS ± .010 2 PLACE DECIMALS ± .02

MATERIAL:

DWN Piercy 12-12-73 DATE
CHK 11/17/74
ENGR 11/17/74
QA 11/17/74
PROD 11/17/74
CONTR NO RG 4/24/74
DESIGN ACTIVITY RELEASE 4/24/74

TEXAS INSTRUMENTS INCORPORATED
Equipment Group Dallas, Texas

CONNECTOR ASSEMBLY, ACOUSTIC COUPLER OPTION-MOD 733

SIZE	CODE IDENT NO	DRAWING NO
B	96214	973258

SCALE 1/1 REV B SHEET

LM

PART NUMBER	REV	DESCRIPTION
0973258-0001	B	CONN.ASSY,ACOUSTIC COUPLER,OPTION 733

ITEM.	QUANTITY.	COMPONENT..	DESCRIPTION	UM
0001	00001.000	0232118-0075	HOUSING CONN.PC 10 DUAL POS PHENOLIC AMP - 58-963-2	EA
0001A			P1 AMP - 58-963-2	
0002	00001.000	0960914-0001	HOOD,I/O CONNECTOR 10 PIN - - -000	EA
0003	00010.000	0231553-0010	CONTACT LEAF 42717-3 AMP - 42-17-3	EA
0004	00001.000	0538347-3999	WIRE HOOKUP B-22 AWG 19 STR WHITE JUD - H-0115	FT
0006	00002.000	0235411-0050	SPRING RETAINING 42973-3 AMP - 42-73-3	EA
0007	REF	0970638-9901	TEST PROGRAM,DITMCO 733 JUMPER CABLE	EA

D 959131

NOTES UNLESS OTHERWISE SPECIFIED

1) DO NOT CLINCH COMPONENT LEADS
2) DO NOT SOLDER ON COMPONENT SIDE
3) MASK ALL CONNECTOR FINGERS ON BOTH SIDES OF BOARD WHEN SOLDERING TO PREVENT SOLDER FROM WICKING DOWN CONNECTOR FINGERS
4) EJECTORS (ITEMS 3 AND 4) ARE TO BE INSTALLED AFTER WAVE SOLDERING
5) MAXIMUM COMPONENT HEIGHT FROM COMPONENT SIDE OF BOARD IS .375
6) MAXIMUM LEAD LENGTH FROM CONDUCTOR SIDE OF BOARD IS .062
7) SWITCH (ITEM 83) IS TO BE INSTALLED AFTER WAVE SOLDERING TO PREVENT DAMAGE TO SWITCH, SOLDER WITH LEVER IN POSITION SHOWN BELOW:

8) REMOVE R20 TO DISABLE END OF LINE ALARM. SEE "VIEW A"
9) R26, R27, R28, C20 & Q4 NOT USED.

VIEW A
SCALE: NONE

REVISIONS

LTR	DESCRIPTION	DATE	APPD
H	376177 (D) 9-11-72 REVISED & REDRAWN W/CHGS		
J	370503 (C) 9-11-72 ON LM, 1) ITEM 60 QTY WAS 6 2) ITEM 60A WAS C3, C7, C4, C18, C19, C20		
	FORMAL RELEASE		
K	373779 (B) 11-9-72 ADDED J1 & J2 PICTORIALLY		
L	381099 (A) 2-19-73 CHANGED R10 WAS R8. R8 WAS R10 ON LM, 1) ITEM 50A ADD R16 2) ITEM 64A ADD C14 3) ITEM 34A ADD R10 4) ITEM 36A ADD R47 5) ITEM 47A ADD R59 6) ITEM 87 ADD QTY 1EA 236083 7) ITEM 87A ADD Q2 8) ITEM 34 QTY WAS 12 9) ITEM 35 QTY WAS 4 10) ITEM 36 QTY WAS 4 11) ITEM 39 WAS 234537-0000, RES 200000 Ω .25W 5% 12) ITEM 39A R9 WAS R47 13) ITEM 41 WAS 234200-0000, RES 121000 Ω .25W 1% 14) ITEM 41A R60 WAS R16 15) ITEM 46 QTY WAS 2 16) ITEM 47 QTY WAS 1 16) ITEM 50 QTY WAS 1 17) ITEM 53 QTY WAS 3 18) ITEM 56 QTY WAS 4 19) ITEM 58 WAS 230716-0003 CAP 22MF 20V 10% 20) ITEM 58A R30 WAS C14 21) ITEM 64 QTY WAS 2 22) ITEM 70 QTY WAS 6 23) ITEM 35A DELETE R9 24) ITEM 46A DELETE R59 25) ITEM 53A DELETE R30, R60 26) ITEM 56A DELETE R10 27) ITEM 70A DELETE Q2		
M	380661 (E) 2-4-74 ADDED PRINTED WIRING BOARD TO REV LEVEL BLOCK UPDATED REV LEVEL BLOCK CHANGED PICTORIAL TO AGREE WITH ARTWORK CHANGES	2/12/74	
N	392408 (D) 3-18-74 IT. 82 P/N ON LM WAS 235360-0100	3/19/74	
P	392475 (D) 3-29-74 1) ON ZONE "A3" ADDED NOTE 8 2) "VIEW A" ADDED IN ZONE "B3"	4/1/74	
R	392439 (C) 4-25-74 CHG. QTY IT. 45 ON LM FROM: 000 TO 2.0	4/25/74	
S	389265 (D) 6-18-74 UPDATED REVISION LEVEL BLOCK	6/11/74	
T	389207 (D) 6-25-74 CHANGED: 1) ITEM 35 WAS QTY 3 2) ITEM 36 WAS QTY 5 3) ITEM 56 WAS QTY 3 4) ITEM 70 WAS QTY 5 5) IT. 60 P/N WAS 230546-0006 QTY WAS 5. 6) IT 61 P/N WAS 230587-0055 DELETED REF. DES: 1) R27 FROM IT. 35A 2) R26 FROM IT 36A 3) R28 FROM IT. 56A 4) C20 FROM IT 60A 5) Q4 FROM IT 70A. ADDED: 1) ITEM 49 2) NOTE 9 UPDATED REVISION LEVEL BLOCK	6/27/74	
V	396698 (D) 8-14-74 CHG: LM IT. 66 WAS: 238906-0000, 150MF, CASE SIZE D UPDATED REV LEVEL BLOCK	8/19/74	
W	399176 (D) 8-28-74 ON LM IT. 60 PN WAS 972929-0415, IT. 61 PN WAS 972929-0427. UPDATED REV. LEVEL BLOCK		

UNLESS OTHERWISE SPECIFIED
DECIMAL XX .02 XXX .010
FRACTIONAL 1/64 ANGULAR 1°
CONCENTRICITY MACHINED DIAMETERS .004 TIR
ALL DIMENSIONS TO BE MET BEFORE PLATING
REMOVE ALL BURRS AND SHARP EDGES
DO NOT SCALE THIS DRAWING
ALL DIMENSIONS IN INCHES
SURFACES MARKED ✓ TO HAVE

PROCESSES
1 SOLDER PER F-124 AND/OR F-127
2 RUBBER STAMP, F-100, HEIGHT .08, COLOR BLACK

LIST OF MATERIALS

TEXAS INSTRUMENTS INCORPORATED
INDUSTRIAL PRODUCTS DIVISION
HOUSTON, TEXAS

PRINTER CONTROL
TERMINAL ASSY

D 959131 W

LM

REVISION LEVEL
PRINTED WIRING BOARD
LOGIC DIAGRAM FOR -0001 ASSY 959175-9901
ASSEMBLY

PART NUMBER	REV	DESCRIPTION.....
959131-0001	W	BOARD ASSY,PRINTER CONTROL

ITEM.	QUANTITY.	COMPONENT..	DESCRIPTION.....	UM
0001	00001.000	959130-0001	PRINTED WIRING BD,PRINTER CONTROL 1209-9130-000	EA
0003	00001.000	231802-0009	EJECTOR WHT 8-200 - 0-000	EA
0004	00001.000	231802-0002	EJECTOR RED 8-200 SCA-8-200	EA
0006	00001.000	418093-0010	COIL 5.60 UH .13 OHMS 10% MIL-MS90542-14	EA
0006A			L1 MIL-MS90542-14	
0008	00003.000	222222-7400	NETWORK SN7400N - 3-000	EA
0008A			Z10 Z18 Z25 - 3-000	
0009	00006.000	222222-7402	NETWORK SN7402N TI--SN7402N	EA
0009A			Z13 Z16 Z17 Z24 Z30 Z33 TI--SN7402N	
0010	00001.000	222222-7403	NETWORK SN7403N	EA
0010A			Z31	
0011	00002.000	222222-7404	NETWORK SN7404N	EA
0011A			Z26 Z28	
0013	00001.000	222222-7409	NETWORK-SN7409N	EA
0013A			Z9	
0014	00002.000	222222-7410	NETWORK SN7410N - 3-000	EA
0014A			Z14 Z32 - 3-000	
0015	00001.000	222222-7413	NETWORK SN7413N	EA
0015A			Z4	
0016	00002.000	222222-7427	NETWORK SN7427N TI--SN7427N	EA
0016A			Z19 Z23 TI--SN7427N	
0017	00001.000	222222-7174	NETWORK SN74174N	EA
0017A			Z12	
0018	00001.000	240000-7454	NETWORK-SN74H54N	EA
0018A			Z11	
0019	00002.000	222222-7474	NETWORK SN7474N - 3-000	EA
0019A			Z20 Z21 - 3-000	
0020	00002.000	222222-7497	NETWORK SN7497N	EA
0020A			Z3 Z27	
0021	00001.000	222222-7121	NETWORK SN74121N	EA
0021A			Z2	
0022	00001.000	222222-7161	NETWORK SN74161N -SN74161N	EA
0022A			Z1 -SN74161N	
0023	00001.000	222222-7164	NETWORK SN74164N TI--SN74164N	EA
0023A			Z34 TI--SN74164N	
0024	00005.000	222222-7175	NETWORK SN74175N	EA
0024A			Z5 Z8 Z15 Z22 Z29	
0025	00001.000	222222-7191	NETWORK SN74191N	EA
0025A			Z7	
0026	00001.000	226748-0011	NETWORK RCM SN37228 -SN37228	EA

PART NUMBER	REV	DESCRIPTION.....
959131-0001	W	BOARD ASSY,PRINTER CONTROL

ITEM.	QUANTITY.	COMPONENT..	DESCRIPTION.....	UM
0026A			Z6	
			-SN37228	
0028	00001.000	222225-0311	NETWORK LM311H	EA
0028A			AR1	
0029	00001.000	233221-0000	RES 10.000 OHM .25W 5.	EA
			AB -CB1005	
0029A			R20	
			AB -CB1005	
0030	00001.000	233698-0000	RES 680.00 OHM .25W 5.	EA
			AB -CB6815	
0030A			R34	
			AB -CB6815	
0031	00001.000	233438-0000	RES 100.00 OHM .25W 5.	EA
			AB -CB1015	
0031A			R40	
			AB -CB1015	
0032	00004.000	233667-0000	RES 510.00 OHM .25W 5.	EA
			AB -CB5115	
0032A			R29 R38 R49 R61	
			AB -CB5115	
0033	00002.000	233756-0000	RES 1000.0 OHM .25W 5.	EA
			AB -CB1025	
0033A			R36 R41	
			AB -CB1025	
0034	00013.000	233869-0000	RES 2000.0 OHM .25W 5.	EA
			AB -CB2025	
0034A			R4 R7 R10 R11 R17 R18 R19	
			AB -CB2025	
0034B			R21 THRU R25,R43	
			AB -CB2025	
0035	00002.000	233960-0000	RES 3300.0 OHM .25W 5.	EA
			AB -CB3325	
0035A			R2 R13	
			AB -CB3325	
0036	00004.000	234153-0000	RES 10000.00 OHM .25W 5%	EA
			AB -CB1035	
C036A			R1 R8 R12 R47	
			AB -CB1035	
0037	00001.000	234313-0000	RES 30000. OHM .25W 5.	EA
			AB -CB3035	
0037A			R48	
			AB -CB3035	
0038	00001.000	234477-0000	RES 100000. OHM .25W 5.	EA
			AB -CB1045	
0038A			R53	
			AB -CB1045	
0039	00001.000	233377-0000	RES 51.000 OHM .25W 5.	EA
			AB -CB5105	
C039A			R9	
			AB -CB5105	
0040	00001.000	234740-0000	RES 10.000 M-OHM .25W 5.	EA
			AB -CB1065	
0040A			R42	
			AB -CB1065	
0041	00001.000	234143-0003	RES 10000. OHM .125W 1%	EA
			TI -MC55C-T2-50PPM/C	
C041A			R60	
			TI -MC55C-T2-50PPM/C	
0042	00002.000	234104-7502	RES 7500. OHM .25W 1% TI-MC55D7501F	EA
			- 3-000	
0042A			R44 R55	
			- 3-000	
0043	00001.000	233481-9000	RES 147.0 OHM .25W 1% TI-MC55D1470F	EA
			539-370-0305 01295	
0043A			R35	
			539-370-0305 01295	
0044	00001.000	233808-0002	RES 1330.0 OHM .25W 1% TI-MC55D1331F	EA
			539-370-0397 01295	
C044A			R33	
			539-370-0397 01295	
0045	00002.000	233894-0501	RES,2150.0 OHM .25W 1% TI-MC55D2151F	EA
			539-370-0417 01295	
0045A			R37 R54	
			539-370-0417 01295	
0046	00001.000	233966-0500	RES 3480. OHM .25W 1% TI-MC55D3481F	EA
			539-370-0437 01295	
0046A			R56	
			539-370-0437 01295	

PART NUMBER	REV	DESCRIPTION
959131-0001	W	BOARD ASSY,PRINTER CONTROL

ITEM.	QUANTITY.	COMPONENT..	DESCRIPTION	UM
0047	00002.000	234004-0045	RES 4220. OHM .25W 1% TI-MC55D4221F	EA
			539-370-0445 01295	
0047A			R51 R59	
			539-370-0445 01295	
0048	00002.000	234052-0050	RES 5110. OHM .25W 1% TI-MC55D5111F	EA
			539-370-0453 01295	
0048A			R39 R45	
			539-370-0453 01295	
0049	00000.020	236605-9500	WIRE 26 AWG BUS TINNED COPPER SOLID BARE	FT
0050	00002.000	234289-0400	RES 23700. OHM .25W 1% TI-MC55D2372F	EA
			539-370-0517 01295	
0050A			R16 R50	
			539-370-0517 01295	
0051	00001.000	234302-9000	RES 26100. OHM .25W 1% TI-MC55D2612F	EA
			539-370-0521 01295	
0051A			R32	
			539-370-0521 01295	
0052	00001.000	234309-9100	RES 28700. OHM .25W 1% TI-MC55D2872F	EA
			539-370-0525 01295	
0052A			R46	
			539-370-0525 01295	
0053	00001.000	234267-0006	RES 19600. OHM .25W 1% TI-MC55D1962F	EA
			539-370-0509 01295	
0053A			R58	
			539-370-0509 01295	
0054	00001.000	234349-0003	RES 40200. OHM .25W 1% TI-MC55D4022F	EA
			539-370-0539 01295	
0054A			R52	
			539-370-0539 01295	
0055	00001.000	234255-0010	RES 16200. OHM .25W 1% TI-MC55D1622F	EA
			539-370-0501 01295	
0055A			R31	
			539-370-0501 01295	
0056	00002.000	234089-0000	RES 6800.0 OHM .25W 5.	EA
			AB -CB6825	
0056A			R3 R14	
			AB -CB6825	
0057	00001.000	230482-0004	CAP .0010 MF 200V 10%	EA
			MIL-CK05BX102K	
0057A			C6	
			MIL-CK05BX102K	
0058	00001.000	234212-9999	RES 14000. OHM .25W 1% TI-MC55D1402F	EA
			539-370-0495 01295	
0058A			R30	
			539-370-0495 01295	
0059	00002.000	232644-0020	VAR. RES 50K OHM HELITRIM	EA
			BEC-79PR-50K	
0059A			R15 R57	
			BEC-79PR-50K	
0060	00004.000	230546-0006	CAP .01000 MF 200V 10%	EA
			MIL-CK06BX103K	
0060A			C5 C7 C4 C19	
			MIL-CK06BX103K	
0061	00008.000	230587-0055	CAP .047 MF 100V 10.%	EA
			MIL-CK06BX473K	
0061A			C10 C15 C16 C17 C21 THRU C24	
			MIL-CK06BX473K	
0062	00001.000	230721-0000	CAP 2.700 MF 15V 10% CASE SIZE A	EA
			MIL-CS13BD275K	
0062A			C13	
			MIL-CS13BD275K	
0063	00002.000	230649-0000	CAP .3300 MF 35V 10% CASE SIZE-A	EA
			MIL-CS13BF334K	
0063A			C5 C8	
			MIL-CS13BF334K	
0064	00003.000	230688-0001	CAP 1.000 MF 50V 10%	EA
			SPR-150D105X9050A	
0064A			C11 C12 C14	
			SPR-150D105X9050A	
0065	00002.000	230811-0000	CAP 22.000 MF 35V 10% CASE SIZE C	EA
			- 3-000	
0065A			C1 C3	
			- 3-000	
0066	00001.000	230855-0001	CAP 68.000 MF 15V 10% CASE SIZE C	EA
			MIL-CS13BD686K	
0066A			C2	
			MIL-CS13BD686K	
0069	00016.000	231702-0002	DICDE 1N9148	EA
			- 3-000	

PART NUMBER	REV	DESCRIPTION
959131-0001	W	BOARD ASSY,PRINTER CONTROL

ITEM.	QUANTITY.	COMPONENT..	DESCRIPTION.	UM
0069A			CR1 CR2 CR3 CR4 CR5 CR6 CR7 - 3-000	
0069B			CR8 THRU CR16 - 3-000	
0070	00004.000	236067-0001	TRANSISTOR 2N2222A 418-338-0004 QPL19500	EA
0070A			Q1 Q3 Q5 Q6 418-338-0004 QPL19500	
0077	00001.000	232583-0005	PAD INTEGRATED CKT.TO-5 8 LEADS .350 DIA THR-7717-107-N-WHT	EA
0078	00006.000	185113-0001	SPACER XST TC-18 CASE * -	EA
0080	00002.000	539493-0001	RECEPTACLE ACCEPTS LEAD SIZE.018-.040GLD AMP-1-380737-0	EA
0080A			J1 J2 AMP-1-380737-0	
0082	00001.000	539544-0001	SOCKET,IC 14 PIN TI -C931402	EA
0082A			XZ35 TI -C931402	
0083	00001.000	235722-0006	SWITCH SUBMINI. TOGGLE 2 POSITION - C-CT8201	EA
0083A			S1 - C-CT8201	
0085	REF	959175-9901	DIAGRAM,LOGIC DET-PRINTER CONTROL	EA
0087	00001.000	236083-0001	TRANSISTOR 2N2907A 418-404-0004 QPL19500	EA
0087A			Q2 418-404-0004 QPL19500	

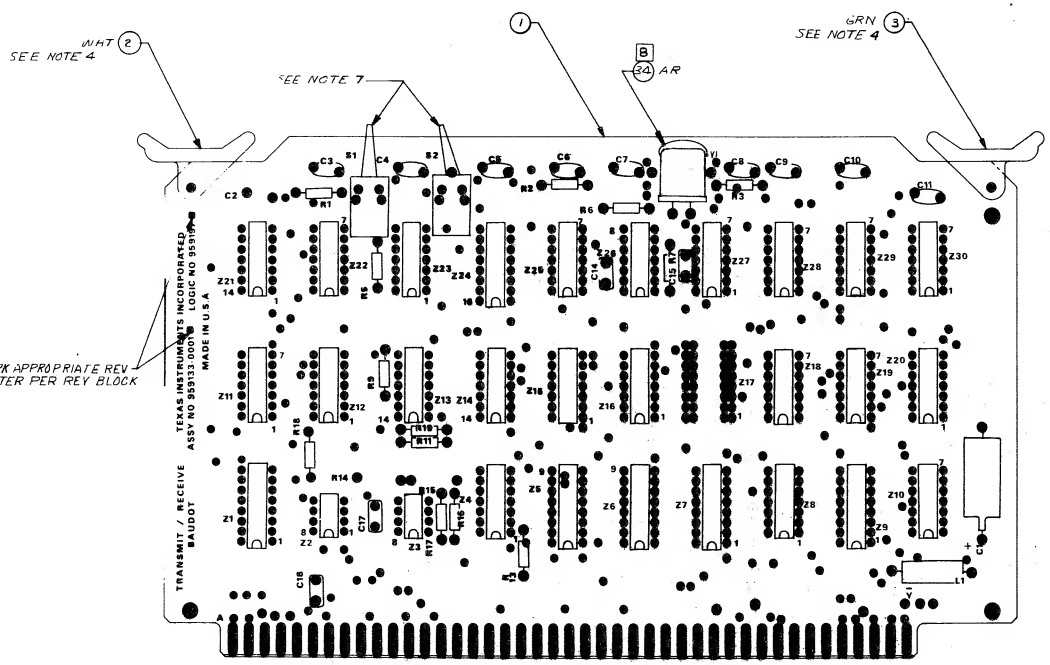

NOTES UNLESS OTHERWISE SPECIFIED

1) DO NOT CLINCH COMPONENT LEADS
2) DO NOT SOLDER ON COMPONENT SIDE
3) MASK ALL CONNECTOR FINGERS ON BOTH SIDES OF BOARD WHEN SOLDERING TO PREVENT SOLDER FROM WICKING DOWN CONNECTOR FINGERS
4) EJECTORS (ITEMS 2 AND 3) ARE TO BE INSTALLED AFTER WAVE SOLDERING (PROCESS 1)
5) MAXIMUM COMPONENT HEIGHT FROM COMPONENT SIDE OF BOARD IS .360
6) MAXIMUM LEAD LENGTH FROM CONDUCTOR SIDE OF BOARD IS .062
7) S1 & S2 TO BE INSTALLED AFTER WAVE SOLDERING. TO PREVENT DAMAGE TO SWITCH, LEVER OF S1 SHOULD BE IN CENTER (OFF) POSITION WHILE SOLDERING AND LEVER OF S2 SHOULD BE IN POSITIONS SHOWN BELOW WHILE SOLDERING

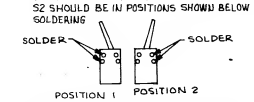

8 USE ITEM 34 RTV 3140 TO SECURE ITEM 30 CRYSTAL TO BOARD

REVISIONS			
LTR	DESCRIPTION	DATE	APPD
M	391713(B) [illegible] 3-17-75 REVISED & REDRAWN WITH CHANGES	3/25/75	D. Booth
N	LN 42403B [illegible]	5-31-77	[illegible]

1) ADD NOTE 8 (2) ITEM 34 PN WAS 411400-22

REVISION LEVEL													
PRINTER WIRING BOARD (959132-0001)	-	-	-	-	-	-	-	G	H	J	K	L	M
LOGIC DIAGRAM FOR -0002 ASSY 1 -99011													
LOGIC DIAGRAM FOR -0001 ASSY 1959197-99011	B	C	D	D	D	E	F	G	H	H	H	J	J
ASSEMBLY	C	D	E	F	G	H	J	K	L	L	L	M	N

0002	0001	ITEM NO	UNIT OF ISSUE	DWG SIZE	PART NUMBER	DESCRIPTION	VENDOR PART NUMBER
QTY PROD						LIST OF MATERIALS	

UNLESS OTHERWISE SPECIFIED
DECIMAL .XX ± .02 .XXX ± .010
FRACTIONAL ± 1/64 ANGULAR ± 1
CONCENTRICITY MACHINED DIAMETERS .001 TIR
ALL DIMENSIONS TO BE MET BEFORE PLATING
REMOVE ALL BURRS AND SHARP EDGES
DO NOT SCALE THIS DRAWING
ALL DIMENSIONS IN INCHES
SURFACES MARKED ✓ TO HAVE ✓
DRILLED HOLE TOLERANCES
.013 TO .136 +.003 -.002 .136 TO .250 +.005 -.003
.250 AND ABOVE ± .005

PROCESSES
1. WAVE SOLDER, F-124 AND (OR) SOLDER PER F-127
2. RUBBER STAMP F100, HEIGHT .09, COLOR BLACK

PROJ NO	SIZE	NEXT ASSY DWG NO
8726	D	960970
8726	D	960971
8726	D	960972
8726	D	960973

DRAFTSMAN 3-17-75 [illegible]
CHKD DRAFTSMAN 4-4-75 [illegible]
DESIGN ENGINEER 4/13/75 [illegible]
APPD ENGINEER 4-4-75 [illegible]
APPD MFG [illegible]
RELEASE [illegible]

TEXAS INSTRUMENTS INCORPORATED INDUSTRIAL PRODUCTS DIVISION HOUSTON TEXAS

TITLE BAUDOT TRANSMIT/RECEIVE
UNIT TRANSMIT/RECEIVE
SYSTEM 700 ASR
SCALE 2/1 D 959133 REV
LM

PART NUMBER	REV	DESCRIPTION
0959133-0001	N	BAUDOT TRANSMIT/RECEIVE

ITEM.	QUANTITY.	COMPONENT..	DESCRIPTION	UM
0001	00001.000	0959132-0001	PW BOARD,BAUDOT TRANSMIT/RECEIVE 1209-9132-000	EA
0002	00001.000	0413277-0001	EJECTOR,PCB,NON-LOCKING,WHITE SCA - S--00(NATURAL)	EA
0003	00001.000	0413277-0009	EJECTOR,PCB,NON-LOCKING,D.GREEN SCA - S--00(D.GREEN)	EA
0004	00002.000	0222222-7400	NETWORK SN7400N - 3-000	EA
0004A			Z15,Z21 - 3-000	
0005	00002.000	0222222-7402	NETWORK SN7402N TI- - SN-402N	EA
0005A			Z11,Z12 TI- - SN-402N	
0006	00001.000	0222222-7403	NETWORK SN7403N	EA
0006A			Z18,	
0007	00003.000	0222222-7404	NETWORK SN7404N	EA
0007A			Z16,Z19,Z23	
0008	00002.000	0222222-7410	NETWORK SN7410N - 3-000	EA
0008A			Z4,Z26 - 3-000	
0009	00001.000	0222222-7451	NETWORK SN7451N - SN-451N	EA
0009A			Z20 - SN-451N	
0010	00003.000	0222222-7474	NETWORK SN7474N - 3-000	EA
0010A			Z10,Z13,Z22 - 3-000	
0011	00001.000	0222222-7492	NETWORK-SN7492N	EA
0011A			Z28	
0012	00002.000	0222222-7497	NETWORK SN7497N	EA
0012A			Z6,Z9	
0013	00001.000	0222222-7163	NETWORK SN74163N	EA
0013A			Z24	
0014	00002.000	0222222-7164	NETWORK SN74164N TI- - SN-4164N	EA
0014A			Z8,Z14 TI- - SN-4164N	
0015	00001.000	0222222-7165	NETWORK SN74165N	EA
0015A			Z7,	
0016	00004.000	0222222-7197	NETWORK SN74197N	EA
0016A			Z25,Z27,Z29,Z30	
0017	00002.000	0537948-0001	NETWORK SN75150P TI - SN-5150P	EA
0017A			Z2,Z3 TI - SN-515CP	
0018	00001.000	0537947-0001	NETWORK SN75154N TI - SN-5154N	EA
0018A			Z1 TI - SN-5154N	
0019	00001.000	0222222-7161	NETWORK SN74161N - SN-4161N	EA
0019A			Z5 - SN-4161N	
0021	00001.000	0972924-0012	CAP FIX TANT SOLID 150 MFD 10 % 15 VOLT QPL - M3-003/1-2277	EA
0021A			C1 QPL - M3-003/1-2277	
0022	00010.000	0532736-0002	CAP FIX CERAMIC .02 MF 20/80% 25 VOLT CRL - 2-0U60E203ZAC	EA
0022A			C2 THRU C11 CRL - 2-0U60E203ZAC	
0023	00004.000	0972965-0016	CAP FIX CERAMIC .022 MF 10% 100V CPL - C-06BX223K	EA

PART NUMBER	REV	DESCRIPTION
0959133-0001	N	BAUDOT TRANSMIT/RECEIVE

ITEM.	QUANTITY.	COMPONENT..	DESCRIPTION	UM
0023A			C14 C15 C17 C18	
			CPL - C-06BX223K	
0025	00009.000	0972946-0072	RES FIX 2.0K OHM 5 % .25 W CARBON FILM	EA
			ROH - R-25	
0025A			R1 R2 R3 R5 R10 R11	
			ROH - R-25	
0025B			R13 R9 R18	
			ROH - R-25	
0026	00002.000	0972946-0057	RES FIX 470 OHM 5 % .25 W CARBON FILM	EA
			ROH - R-25	
0026A			R6,R7	
			ROH - R-25	
0027	00002.000	0972946-0017	RES FIX 10.0 OHM 5 % .25 W.CARBON FILM	EA
			ROH - R-25	
0027A			R16 R17	
			ROH - R-25	
0030	00001.000	0538031-0005	CRYSTAL UNIT QUARTZ 9.8304 MHZ .005%	EA
			MIL - CR-0A/U 9.8304	
0030A			Y1	
			MIL - CR-0A/U 9.8304	
0031	00001.000	0538433-0001	COIL RF 5.60 UH .13 OHM 885 MA LT10K158	EA
			QPL - M-90542-14	
0031A			L1	
			CPL - M-90542-14	
0032	00001.000	0235722-0006	SWITCH SUBMINI. TOGGLE 2 POSITION	EA
			- C-CT8201	
0032A			S2	
			- C-CT8201	
0033	00001.000	0235665-1075	SWITCH SUBMINI TOGGLE-CENTER OFF	EA
			- C-CT8206	
0033A			S1	
			- C-CT8206	
0034	AR	0417559-0001	SILICONE RUBBER (RTV) DOW 3140	TU
			SEE - T- DRAWING	
0035	REF	0959197-9901	DIAGRAM,LOGIC DET-BAUDOT TRANS/RECEIVE	EA
0036	REF	0959213-9901	PROGRAM TEST,BAUDOT TRANSMIT/RECEIVE	EA

NOTES: UNLESS OTHERWISE SPECIFIED

1) DO NOT CLINCH COMPONENT LEADS.
2) DO NOT SOLDER ON COMPONENT SIDE.
3) MASK ALL CONNECTOR FINGERS ON BOTH SIDES OF BOARD WHEN SOLDERING TO PREVENT SOLDER FROM WICKING DOWN CONNECTOR FINGERS.
4) EJECTORS (ITEMS 27 AND 28) ARE TO BE INSTALLED AFTER WAVE SOLDERING.
5) MAXIMUM COMPONENT HEIGHT FROM COMPONENT SIDE OF BOARD IS .375
6) MAXIMUM LEAD LENGTH FROM CONDUCTOR SIDE OF BOARD IS .062.
7) SWITCHES (ITEMS 22 AND 23) ARE TO BE INSTALLED AFTER WAVE SOLDERING. TO PREVENT DAMAGE, SOLDER WITH LEVER IN POSITION SHOWN BELOW

SOLDER — SOLDER

8) R12 IS NOT INSTALLED DURING ASSY

LTR	DESCRIPTION	DATE	APPD
J	372904 (C) 8-31-72 REDRAWN & REVISED WITH CHANGES		
K	310668 (B) 9-29-72 CHG: 1) IT. 4 QTY WAS 10; IT. 4A WAS C2 THRU C11 ADDED: NOTE 8	10/10/72	
L	370671 (E) 10-31-72 1) UPDATED REV LEVEL	11/1/72	
M	374946 (A) 1-3-73 1) UPDATED REV LEVEL 2) DELETED R1 FROM ITEM 25A; ITEM 25 QTY WAS 12	1/8/72	
N	396629 (D) 8-15-74 1) UPDATED REV LEVEL BLOCK. 2) ON LM, CHANGED ITEM 3, WAS P/N 220906-0000, QTY 1.	8/22/74	

REVISION LEVEL		
PWB (959134-0001)		
LOGIC DIAGRAM FOR -0001 ASSY (959177-9901)		
ASSEMBLY		

UNLESS OTHERWISE SPECIFIED
DECIMAL XX .02 XXX .010
FRACTIONAL 1/64 ANGULAR ± 1
ALL DIMENSIONS IN INCHES
DO NOT SCALE THIS DRAWING

QTY REQD -0002	QTY REQD -0001	ITEM NO	UNIT OF MEAS	DWG SIZE	PART NUMBER	DESCRIPTION	VENDOR PART NUMBER

LIST OF MATERIALS

PROCESSES
1 WAVE SOLDER, F-124
2 RUBBER STAMP, F-100, HEIGHT .09, COLOR BLACK.

TEXAS INSTRUMENTS INCORPORATED
INDUSTRIAL PRODUCTS DIVISION
HOUSTON, TEXAS

ASR TRANSMIT/RECEIVE
TERMINAL ASSY
733 ASR
D 959135 N

LM

D 959135 N

PART NUMBER	REV	DESCRIPTION
959135-0001	N	ASCII TRANSMIT AND RECEIVE

ITEM.	QUANTITY.	COMPONENT..	DESCRIPTION.	UM
0001	00001.000	959134-0001	PW BCARD,ASCII TRANSMIT/RECEIVE 1209-9134-C00	EA
0003	00001.000	230855-0001	CAP 68.000 MF 15V 10% CASE SIZE C MIL-CS13BD686K	EA
0003A			C1 MIL-CS13BD686K	
0004	00011.000	230561-0000	CAP .02000 MF 25V 80/-20 % ERI-5835Y5U203Z	EA
0004A			C2 THRU C12 ERI-5835Y5U203Z	
0005	00001.000	418093-0010	COIL 5.60 UH .13 OHMS 10% MIL-MS90542-14	EA
0005A			L1 MIL-MS90542-14	
0006	00001.000	230571-0000	CAP .022 MF 100V 10. % MIL-CK06BX223K	EA
0006A			C13 MIL-CK06BX223K	
0007	00004.000	222222-7400	NETWORK SN7400N - 3-000	EA
0007A			Z3 Z6 Z8 Z23 - 3-000	
0008	00002.000	222222-7402	NETWORK SN7402N TI--SN7402N	EA
0008A			Z12 Z5 TI--SN7402N	
0009	00001.000	222222-7403	NETWORK SN7403N	EA
0009A			Z7	
0010	00002.000	222222-7404	NETWORK SN7404N	EA
0010A			Z9 Z18	
0011	00004.000	222222-7474	NETWORK SN7474N - 3-000	EA
0011A			Z4 Z17 Z25 Z26 - 3-000	
0012	00003.000	222222-7497	NETWORK SN7497N	EA
0012A			Z15 Z16 Z19	
0013	00002.000	222222-7161	NETWORK SN74161N -SN74161N	EA
0013A			Z13 Z14 -SN74161N	
0014	00001.000	222222-7492	NETWORK-SN7492N	EA
0014A			Z2	
0015	00002.000	222222-7197	NETWORK SN74197N	EA
0015A			Z11 Z20	
0016	00001.000	222222-7193	NETWORK SN74193N -SN74193N	EA
0016A			Z27 -SN74193N	
0017	00002.000	222222-7164	NETWORK SN74164N TI--SN74164N	EA
0017A			Z21 Z28 TI--SN74164N	
0018	00002.000	222222-7165	NETWORK SN74165N	EA
0018A			Z22 Z29	
0019	00001.000	537948-0001	NETWORK SN75150P TI -SN7515CP	EA
0019A			Z10 TI -SN7515CP	
0020	00001.000	537947-0001	NETWORK SN75154N TI -SN75154N	EA
0020A			Z1 TI -SN75154N	
0021	00001.000	538031-0006	CRYSTAL UNIT QUARTZ 13.5168 MHZ .005% MIL-CR60A/U13.5168MHZ	EA
0021A			Y1 MIL-CR60A/U13.5168MHZ	
0022	00001.000	235722-0006	SWITCH SUBMINI. TOGGLE 2 POSITION - C-CT8201	EA

PART NUMBER	REV	DESCRIPTION
959135-0001	N	ASCII TRANSMIT AND RECEIVE

ITEM.	QUANTITY.	COMPONENT..	DESCRIPTION	UM
0022A			S2	
			- C-CT8201	
0023	00002.000	235665-1075	SWITCH SUBMINI TOGGLE-CENTER OFF	EA
			- C-CT8206	
0023A			S1 S3	
			- C-CT8206	
0024	00002.000	233650-0000	RES 470.00 OHM .25W 5.	EA
			AB -CR4715	
0024A			R2,R5	
			AB -CR4715	
0025	00011.000	233869-0000	RES 2000.0 OHM .25W 5.	EA
			AB -CR2025	
0025A			R3 R4 R6 R8 R9 R10 R7 R13 R14	
			AB -CR2025	
0025E			R15 R 16	
			AB -CR2025	
0026	00001.000	233221-0000	RES 10.000 OHM .25W 5.	EA
			AB -CR1005	
C026A			R11	
			AB -CR1C05	
0027	00001.000	2318C2-0009	EJECTOR WHT 8-200	EA
			- 0-000	
0028	00001.000	2318C2-0C05	EJECTOR GRN 8-200	EA
			SCA-8-200	
0029	AR	2366C8-0000	WIRE 20 AWG BUS TINNED COPPER SOLID BARE	FT
0030	REF	959177-0901	DIAGRAM,LOGIC,DET.ASCII TRANSMIT/RECEIVE	EA
0031	REF	959211-0901	PROGRAM TEST,ASC II	EA
0032	00001.000	222222-7111	NETWORK SN74111N	EA
0032A			Z24	

LTR	DESCRIPTION	DATE	APPD
W	CN423098 L. King	6-4-77	
	1) ITEM 33 DELE Q2 (2) ADD ITEMS 120, 120A, 121, 121A (93B(3) ITEM 92 PN WAS 972948-2 (4) ITEM 93 QTY WAS 2 (5) ITEM 105 QTY WAS 8		

NOTES UNLESS OTHERWISE SPECIFIED

1) DO NOT CLINCH COMPONENT LEADS.
2) MASK ALL CONNECTOR FINGERS ON BOTH SIDES OF BOARD WHEN SOLDERING TO PREVENT SOLDER FROM WICKING DOWN CONNECTOR FINGERS.
3) EJECTORS (ITEMS 2 AND 31 ARE TO BE INSTALLED AFTER PROCESS 1
4) MAXIMUM COMPONENT HEIGHT FROM COMPONENT SIDE OF BOARD IS .480 MAXIMUM COMPONENT HEIGHT FROM CONDUCTOR SIDE OF BOARD IS .650
5) MAXIMUM LEAD LENGTH FROM CONDUCTOR SIDE OF BOARD IS .062
6) FOR OPTIONAL UNITED KINGDOM CHARACTER SET, REMOVE R49 AND INSTALL INTO R53 POSITION (-0002 ASSY ONLY). SEE VIEW A
7) ALIGN HEATSINK AS SHOWN TO PREVENT SHORTING
8) WHEN ITEM 122 ... MOUNT Q1 SUCH THAT NO PART OF THE TRANSISTOR TAB ... FROM BOARD
9) ... #4 TEFLON TUBING 0.6 ... THRU L5
10) USE SHORTER MOUNTING SCREWS (ITEM 115) WHEN TRANSISTOR Q9 BASE THICKNESS IS TYPICAL .060 TO .070

PRINTER CODE	BAUDOT - U.S. FIGURES	959137-0002
PRINTER CODE	ASC II	959137-0001
	DESCRIPTION	PART NO.

PRINTED WIRING BOARD	-	-	D	D	D	D	E	F	G	H	J	J	J	T
LOGIC [redacted] -0002 ASSY (959178 -0001)	E	F	G	H	J	J	J	K	K	K	L	L	L	N
LOGIC [redacted] -0001 ASSY (959178 -0001)	E	F	G	H	J	J	J	K	K	K	L	L	L	N
ASSEMBLY	E	F	G	H	J	K	L	M	N	P	R	S	T	U	V	W

REVISION LEVEL

UNLESS OTHERWISE SPECIFIED
DECIMAL XX ± .02 XXX ± .010
FRACTIONAL ± 1/64 ANGULAR ± 1°
CONCENTRICITY MACHINED DIAMETERS .004 TIR
ALL DIMENSIONS TO BE MET BEFORE PLATING
REMOVE ALL BURRS AND SHARP EDGES
DO NOT SCALE THIS DRAWING
ALL DIMENSIONS IN INCHES
SURFACES MARKED ✓ TO HAVE
DRILLED HOLE TOLERANCES .013 TO .136 +.003/-.002, .136 TO .250 +.005/-.003, .250 AND ABOVE +.005

LIST OF MATERIALS

PROCESSES	PROJ NO.	SIZE	NEXT ASSY DWG NO.
1. WAVE SOLDER, F-124 AND (OR) SOLDER PER F-127	8726	D	960970
	8726	D	960971
2. RUBBER STAMP, F-100, HEIGHT .09, COLOR BLACK	8726	D	960972
	8726	D	960973

TEXAS INSTRUMENTS INCORPORATED
INDUSTRIAL PRODUCTS DIVISION
HOUSTON, TEXAS

PRINTER CODE
TERMINAL ASSY
SYSTEM 700 ASR
SCALE 2/1 D 959137

PART NUMBER	REV	DESCRIPTION
0959137-0001	W	PRINTER CODE,ASCII
0959137-0002	W	PRINTER CODE,BAUDOT-U.S.FIGURES

ITEM.	QUANTITY.	COMPONENT..	DESCRIPTION	UM
0001	00001.000	0959136-0001	PW BOARD,PRINTER CODE 1209-9136-000	EA
0002	00001.000	0413277-0001	EJECTOR,PCB,NON-LOCKING,WHITE SCA - S--00(NATURAL)	EA
0003	00001.000	0413277-0014	EJECTOR,PCB,NON-LOCKING,D.BROWN SCA - S--00(D.BROWN)	EA
0005	00001.000	0538433-0001	COIL RF 5.60 UH .13 OHM 885 MA LT10K158 QPL - M-90542-14	EA
0005A			L1 QPL - M-90542-14	
0007	00002.000	0222222-7400	NETWORK SN7400N - 3-000	EA
0007A			Z6 Z13 - 3-000	
0008	00001.000	0222222-7402	NETWORK SN7402N TI- - SN-402N	EA
0008A			Z15 TI- - SN-402N	
0009	00001.000	0222222-7403	NETWORK SN7403N	EA
0009A			Z11	
0010	00002.000	0222222-7404	NETWORK SN7404N	EA
0010A			Z12 Z17	
0011	00001.000	0222222-7408	NETWORK-SN7408N	EA
0011A			Z9	
0012	00001.000	0222222-7410	NETWORK SN7410N - 3-000	EA
0012A			Z20 - 3-000	
0013	00001.000	0222222-7427	NETWORK SN7427N TI- - SN-427N	EA
0013A			Z18 TI- - SN-427N	
0014	00003.000	0222222-7474	NETWORK SN7474N - 3-000	EA
0014A			Z5,Z7,Z21 - 3-000	
0015	00001.000	0222222-7497	NETWORK SN7497N	EA
0015A			Z10	
0016	00001.000	0222222-7107	NETWORK SN74107N	EA
0016A			Z8	
0017	00001.000	0222222-7121	NETWORK SN74121N	EA
0017A			Z19	
0018	00001.000	0222222-7123	NETWORK SN74123N	EA
0018A			Z22	
0019	00003.000	0222222-7164	NETWORK SN74164N TI- - SN-4164N	EA
0019A			Z4,Z16,Z24 TI- - SN-4164N	
0020	00001.000	0222222-7165	NETWORK SN74165N	EA
0020A			Z3	
0021	00004.000	0222222-7175	NETWORK SN74175N	EA
0021A			Z1,Z2,Z14	
0023	00001.000	0232426-0100	NETWORK VOLTAGE REGULATOR NSC - LM-305	EA
0023A			AR1 NSC - LM-305	
0024	00002.000	0222224-2013	NETWORK LM201AH OPERATIONAL AMP - LM-01AH	EA
0024A			AR2,AR3 - LM-01AH	
0025	00001.000 for-0001	0959328-0001	NETWORK CHAR GEN ASCII TMS1856 TI - TM-1856	EA
0025	00001.000 for-0002	0959329-0001	NETWORK CHAR GEN BAUDOT	EA

PART NUMBER	REV	DESCRIPTION
0959137-0001	W	PRINTER CODE,ASCII
0959137-0002	W	PRINTER CODE,BAUDOT-U.S.FIGURES

ITEM.	QUANTITY.	COMPONENT..	DESCRIPTION	UM
0025A			Z23 TI - TM-1856	
0025A			Z23	
0026	00001.000	0972946-0033	RES FIX 47.0 OHM 5 % .25 W.CARBON FILM ROH - R-25	EA
0026A			R32 ROH - R-25	
0027	00002.000	0972946-0037	RES FIX 68.0 OHM 5 % .25 W.CARBON FILM ROH - R-25	EA
0027A			R27 R40 ROH - R-25	
0028	00002.000	0972946-0017	RES FIX 10.0 OHM 5 % .25 W.CARBON FILM ROH - R-25	EA
0028A			R47 R49 ROH - R-25	
0029	00001.000	0972946-0047	RES FIX 180 OHM 5 % .25 W CARBON FILM ROH - R-25	EA
0029A			R25 ROH - R-25	
0030	00001.000	0972946-0121	RES FIX 220K OHM 5 % .25 W CARBON FILM ROH - R-25	EA
0030A			R11 ROH - R-25	
0031	00002.000	0972946-0055	RES FIX 390 OHM 5 % .25 W CARBON FILM ROH - R-25	EA
0031A			R37 R1 ROH - R-25	
0032	00001.000	0972946-0057	RES FIX 470 OHM 5 % .25 W CARBON FILM ROH - R-25	EA
0032A			R6 ROH - R-25	
0033	00001.000	0972946-0061	RES FIX 680 OHM 5 % .25 W CARBON FILM ROH - R-25	EA
0033A			R39 ROH - R-25	
0035	00001.000	0972946-0064	RES FIX 910 OHM 5% .25 W CARBON FILM ROH - R-25	EA
0035A			R13 ROH - R-25	
0037	00003.000	0972946-0075	RES FIX 2.7K OHM 5 % .25 W CARBON FILM ROH - R-25	EA
0037A			R2,R5,R28 ROH - R-25	
0038	00001.000	0972946-0077	RES FIX 3.3K OHM 5 % .25 W CARBON FILM ROH - R-25	EA
0038A			R38 ROH - R-25	
0039	00001.000	0972946-0081	RES FIX 4.7K OHM 5 % .25 W CARBON FILM ROH - R-25	EA
0039A			R4 ROH - R-25	
0040	00003.000	0972946-0089	RES FIX 10K OHM 5% .25 W CARBON FILM ROH - R-25	EA
0040A			R50,R51,R43 ROH - R-25	
0041	00001.000	0972946-0087	RES FIX 8.2K OHM 5 % .25 W CARBON FILM ROH - R-25	EA
0041A			R42 ROH - R-25	
0042	00002.000	0972946-0093	RES FIX 15K OHM 5% .25 W CARBON FILM ROH - R-25	EA
0042A			R7,R44 ROH - R-25	
0043	00001.000	0972946-0096	RES FIX 20 K OHM 5 % .25 W CARBON FILM ROH - R-25	EA
0043A			R41 ROH - R-25	
0046	00001.000	0972946-0072	RES FIX 2.0K OHM 5 % .25 W CARBON FILM ROH - R-25	EA
0046A			R45 ROH - R-25	
0047	00001.000	0972946-0067	RES FIX 1.2K OHM 5% .25 W CARBON FILM ROH - R-25	EA
0047A			R3 ROH - R-25	
0048	00001.000	0972946-0065	RES FIX 1.0K OHM 5% .25 W CARBON FILM ROH - R-25	EA
0048A			R52 ROH - R-25	
0049	00002.000	0399999-9702	RESISTOR SELECTED AT UNIT TEST	EA

PART NUMBER	REV	DESCRIPTION.....
0959137-0001	W	PRINTER CODE,ASCII

ITEM.	QUANTITY.	COMPONENT..	DESCRIPTION.....	UM
0049A			R9,R18	
0051	00002.000	0972947-0061	RES FIX 680 OHM 5% .5 W CARBON FILM	EA
			ROH - R-50	
0051A			R31 R24	
			ROH - R-50	
0052	00001.000	0972947-0071	RES FIX 1.8K OHM 5% .5 W CARBON FILM	EA
			ROH - R-50	
0052A			R33	
			ROH - R-50	
0054	00001.000	0972947-0079	RES FIX 3.9K OHM 5% .5 W CARBON FILM	EA
			ROH - R-50	
0054A			R26	
			ROH - R-50	
0055	00001.000	0539812-0008	RES FIX FILM 200 OHM .1% .125 WATT	EA
			COR - N-4-50PPM/C	
0055A			R21	
			COR - N-4-50PPM/C	
0056	00001.000	0539812-0009	RES FIX FILM 243 OHM .1% .125 WATT	EA
			COR - N-4-50PPM/C	
0056A			R22	
			COR - N-4-50PPM/C	
0057	00001.000	0539812-0011	RES FIX FILM 1.02K OHM .1% .125 WATT	EA
			COR - N-4-50PPM/C	
0057A			R15	
			COR - N-4-50PPM/C	
0058	00001.000	0539812-0012	RES FIX FILM 1.82K OHM .1% .125 WATT	EA
			COR - N-4-50PPM/C	
0058A			R17	
			COR - N-4-50PPM/C	
0059	00001.000	0539370-0413	RES FIX FILM 1.96K OHM 1% .25 WATT	EA
			COR - N-55	
0059A			R10	
			COR - N-55	
0060	00002.000	0539812-0014	RES FIX FILM 3.01K OHM .1% .125 WATT	EA
			COR - N-4-50PPM/C	
0060A			R20 R34	
			COR - N-4-50PPM/C	
0061	00001.000	0539812-0001	RES FIX FILM 4.12K OHM .1% .125 WATT	EA
			COR - N-4-50PPM/C	
0061A			R23	
			COR - N-4-50PPM/C	
0062	00001.000	0539812-0003	RES FIX FILM 8.06K OHM .1% .125 WATT	EA
			COR - N-4-50PPM/C	
0062A			R12	
			COR - N-4-50PPM/C	
0063	00001.000	0539812-0004	RES FIX FILM 8.87K OHM .1% .125 WATT	EA
			COR - N-4-50PPM/C	
0063A			R14	
			COR - N-4-50PPM/C	
0064	00001.000	0539370-0480	RES FIX FILM 9.76K OHM 1% .25 WATT	EA
			COR - N-55	
0064A			R8	
			COR - N-55	
0065	00001.000	0539812-0018	RES FIX FILM 30.9K OHM .1% .125 WATT	EA
			COR - N-4-50PPM/C	
0065A			R16	
			COR - N-4-50PPM/C	
0066	00001.000	0539812-0002	RES FIX FILM 38.3K OHM .1% .125 WATT	EA
			COR - N-4-50PPM/C	
0066A			R19	
			COR - N-4-50PPM/C	
0067	00001.000	0399999-9702	RESISTOR SELECTED AT UNIT TEST	EA
0067A			R35	
0069	00001.000	0972926-0010	CAP FIX MICA 500V 20.0 PF 5 %	EA
			CPL - CM-4E200J00	
0069A			C6	
			CPL - CM-4E200J00	
0070	00001.000	0972554-0004	RESISTOR,FIXED,WIREWOUND .2 OHM 2W 5%	EA
			SEE - T- DRAWING	
0070A			R30	
			SEE - T- DRAWING	
0071	00001.000	0537570-0002	RES VAR CERMET 100 K OHMS 10 % .75 WATT	EA
			BEC - 79-R100K	
0071A			R36	
			BEC - 79-R100K	
0072	00001.000	023C365-5000	CAP 3.000 PF 500V 20. %	EA
			ELM - DM-0-0300	

PART NUMBER	REV	DESCRIPTION
0959137-0001	M	PRINTER CODE,ASCII

ITEM.	QUANTITY.	COMPONENT..	DESCRIPTION	UM
0072A			C5	
			ELM - DM-C-030D	
0073	00001.000	0972929-0373	CAP FIX CERAMIC 47.0 PF 10 % 200 V	EA
			QPL - M-9014/1C-137	
0073A			C1	
			QPL - M-9014/1C-137	
0074	00001.000	0972929-0382	CAP 150 PF 10% 200V FXD CER STYLE CKR05	EA
			MIL - C--9014/1C-138	
0074A			C29	
			MIL - C--9014/1C-138	
0075	00001.000	0058023-0008	CAP FIX .010 MFD 5 % 100V MYLAR FOIL	EA
			TRW - 6-3UW	
0075A			C5	
			TRW - 6-3UW	
0076	00003.000	0972924-0013	CAP FIX TANT SOLID 2.2 MFD 10 % 20 VOLT	EA
			QPL - M3-003/1-2283	
0076A			C3,C12,C14	
			QPL - M3-003/1-2283	
0077	00001.000	0972924-0009	CAP FIX TANT SOLID 3.3 MFD 10 % 15 VOLT	EA
			QPL - M3-003/1-2268	
0077A			C4	
			QPL - M3-003/1-2268	
0078	00002.000	0972929-0394	CAP FIX CERAMIC 680 PF 10 % 200 V	EA
			QPL - M3-014/01-1394	
0078A			C13,C2	
			QPL - M3-014/01-1394	
0079	00002.000	0972924-0019	CAP FIX TANT SOLID 22 MFD 10 % 35 VOLT	EA
			QPL - M3-003/1-2306	
0079A			C15,C17	
			QPL - M3-003/1-2306	
0080	00001.000	0972924-0006	CAP FIX TANT SOLID 39 MFD 10 % 10 VOLT	EA
			QPL - M3-003/1-2259	
0080A			C11	
			QPL - M3-003/1-2259	
0081	00001.000	0972924-0012	CAP FIX TANT SOLID 150 MFD 10 % 15 VOLT	EA
			QPL - M3-003/1-2277	
0081A			C16	
			QPL - M3-003/1-2277	
0082	00012.000	0532736-0002	CAP FIX CERAMIC .02 MF 20/80% 25 VOLT	EA
			CRL - 2-DU60E203ZAC	
0082A			C7 C18 THRU C28	
			CRL - 2-DU60E203ZAC	
0083	00001.000	0972934-0010	DIODE,1N755A 7.5 V 5% SIL VOLT REG	EA
			QPL - 1-755A	
0083A			CR3	
			QPL - 1-755A	
0084	00002.000	0972934-0013	DIODE,1N758A 10.0V 5% SIL VOLT REG	EA
			QPL - 1-758A	
0084A			CR5,CR10	
			QPL - 1-758A	
0085	00001.000	0972934-0014	DIODE,1N759A 12.0 V 5% SIL VOLT REG	EA
			QPL - 1-759A	
0085A			CR9	
			QPL - 1-759A	
0086	00009.000	0972932-0001	DIODE,1N914B SWITCHING 75V PIV 75MA 4NS	EA
			TI - I-914B	
0086A			CR1,CR2,CR4,CR11,CR12,CR13	
			TI - I-914B	
0086B			CR7 CR8 CR14	
			TI - I-914B	
0088	00001.000	0231784-6000	DIODE- 2 PELLET, SILICON,MULTI	EA
			GE - MP-200	
0088A			CR6	
			GE - MP-200	
0090	00001.000	0972924-0026	CAP FIX TANT SOLID 3.9 MFD 10 % 75 VOLT	EA
			QPL - M3-003/1-2411	
0090A			C1C	
			QPL - M3-003/1-2411	
0091	00002.000	0418239-0001	TRANSISTOR,2N1711	EA
			QPL - 2-1711	
0091A			Q7,Q10	
			QPL - 2-1711	
0092	00005.000	0972957-0001	TRANSISTOR-A5T2222 NPN SILICON	EA
			TI- - A5-2222	
0092A			Q1 Q3,Q4,Q5,Q8	
			TI - 2-2222A	
0093	00001.000	0972959-0002	TRANSISTOR,2N2907A PNP GEN PURP SW TO-18	EA
			TI - 2-2907A	
0093A			Q6	
			TI - 2-2907A	

PART NUMBER	REV	DESCRIPTION
0959137-0001	W	PRINTER CODE,ASCII
0959137-0002	W	PRINTER CODE,BAUDOT-U.S.FIGURES

ITEM.	QUANTITY.	COMPONENT..	DESCRIPTION	
0093B			ITEM 93 MAY BE USED WITH TI - 2-2907A	
0093C			ITEM 105 AS AN ALTERNATE TO TI - 2-2907A	
0093D			ITEM 121 TI - 2-2907A	
0095	00001.000	0236091-0026	XST- 2N3791 TI - 2N-791	EA
0095A			Q9 TI - 2N-791	
0096	00001.000	0248490-5245	XST,HI-RELBL N-CHAN FET SKA5729 NKL LEAD	EA
0096A			Q13	
0097	00004.000	0230029-0001	BEAD SHIELDING FEP - 56-9065/4A	EA
0097A			L2 L3 L4 L5 FER - 56-9065/4A	
0098	00001.000	0772278-0001	CONNECTOR PC 15PIN SINGLE ROW MSR - MC-5S/2-2	EA
0098A			XA1 MSR - MC-5S/2-2	
0099	AR	0411400-0022	WIRE 22AWG ELETRC-TIN-PLATED,COPPER	FT
0101	00001.000	0959317-0001	HEATSINK,PRINTER CODE 1210-9317-038	EA
0102	00001.000	0419253-0003	HEATSINK,TRANSISTOR WAK - 2-5	EA
0103	00003.000	0232583-0005	PAD INTEGRATED CKT,TO-5 8 LEADS .350 DIA THR - 77-7-107-N-WHT	EA
0104	00002.000	0184262-0001	PAD,MOUNTING,TO-5, 4 LEAD,RED THR - 7-17-5	EA
0105	00001.000	0185113-0001	X SPACER XST TO-18 CASE * - -	EA
0106	00004.000 for-0002 only	0539493-0001	RECEPTACLE ACCEPTS LEAD SIZE.018-.040GLD AMP - 1--80737-0	EA
0106A			J4 THRU J7 AMP - 1--80737-0	
0107	00002.000	0539493-0002	RECEPTACLE,ACCEPTS LEAD SIZE.018-.040TIN AMP - 38-635-2	EA
0107A			J8,J9 AMP - 38-635-2	
0108	00004.000	0972988-0015	SCREW 4-40 X .375 PAN HEAD CRES	EA
0109	00004.000	0411101-0057	LOCKWASHER # 4 EXTERNAL TOOTH CRES QPL - M-35335-57	EA
0110	REF	0959178-9901	DIAGRAM,LOGIC DET-PRINTER CODE	EA
0111	AR	0415486-0001	GREASE,SILICONE,HEAT COND. (8 OZ TUBE) WAK - 1-0	EA
0112	00002.000	0232164-0150	JACK TIP PRNTD CKT HORIZONTAL RED EFJ - 10--1102-001	EA
0112A			J1 J2 EFJ - 10--1102-001	
0113	00001.000	0232164-0200	JACK TIP PRNTD CKT HORIZONTAL BLK EFJ - 10--1103-001	EA
0113A			J3 EFJ - 10--1103-001	
0114	00002.000	0411101-0056	LOCKWASHER #6 EXTERNAL TOOTH CRES QPL - M-35335-56	EA
0115	REF	0972988-0026	SCREW 6-32 X .250 PAN HEAD CRES	EA
0116	REF	0959219-9901	PROGRAM TEST,PRINTER CODE	EA
0117	AR	0411634-1700	SLEEVE,PVC, .166 DIA. BLACK QPL - M-L-1-631	FT
0118	AR	0410499-0013	INSULATION,SLEEVING # 8 NATURAL QPL - M-L-I 22129	FT
0119	00001.000	0972965-0024	CAP FIX CERAMIC .100 MF 10% 100V QPL - C-068X104K	EA
0119A			C8 QPL - C-068X104K	
0120	00002.000	0972988-0027	SCREW 6-32 X .312 PAN HEAD CRES	EA
0121	00001.000	0800523-0001	TRANSISTOR A5T2907 PNP SILICON TI- - A5-2907	EA
0121A			Q2 TI- - A5-2907	
0122	00000.000	0972948-0002	TRANSISTOR,2N2222A NPN GEN PURP SW TO-18 TI - 2-2222A	EA
0122A			ITEM 122 MAY BE USED WITH TI - 2-2222A	
0122B			ITEM 105 AS AN ALTERNATE TO TI - 2-2222A	
0122C			ITEM 92 TI - 2-2222A	

LTR	DESCRIPTION	DATE	APPD
A	367327 W. Tatarchuk 11-2-71 QTY OF ITEM 6 WAS 9, DELETED C10.	—	
B	371139 (C) W. Tatarchuk 11-2-71 ADDED ITEMS 10 & 11.		
C	370632 (E) 2-16/72 ITEM 7 WAS 231038-0030. ITEM 9 WAS 236376-0000. UPDATED TO AGREE WITH NEW ARTWORK CHANGES.		
D	376212 (E) 5-8-72 CHANGE ITEM 4 FROM 244578-001 TO 958780-0001	5-9-72	
	ORIGINAL RELEASE		
E	391540 (E) UPDATED REV LEVEL BLOCK UPDATED BOARD ASSY TO AGREE WITH LATEST ARTWORK CHANGE.		
F	403461 (C) 11-20-74 1) ZONE B-1, B-2; ADDED DATUM "A" AND PARALLEL DIMENSION TO DATUM "A"		

REVISION LEVEL						
PWB (…140-…001)	A	B	C	D	E	F
LOGIC DIAGRAM FOR -0001 ASSY (959180-9901)	A	A	B	B	B	B
ASSEMBLY	A	B	C	D	E	F

UNLESS OTHERWISE SPECIFIED
DECIMAL XX .02 XXX .010
FRACTIONAL 1/64 ANGULAR ± 1
CONCENTRICITY MACHINED DIAMETERS .004 TIR
ALL DIMENSIONS TO BE MET BEFORE PLATING
REMOVE ALL BURRS AND SHARP EDGES
DO NOT SCALE THIS DRAWING
ALL DIMENSIONS IN INCHES
SURFACES MARKED ✓ TO HAVE ✓
DRILLED HOLE TOLERANCES 013 TO 136 +.003 −.002; 136 TO 250 +.005 −.003; 250 AND ABOVE .005

PROCESSES
1. WAVE SOLDER F-124
2. RUBBER STAMP F-100, HGT .09, COLOR BLK

LIST OF MATERIALS

PROJ NO	SIZE	NEXT ASSY DWG NO
8726	E	959404

DRAFTSMAN W. Tatarchuk 11-2-71

TEXAS INSTRUMENTS INCORPORATED
INDUSTRIAL PRODUCTS DIVISION
HOUSTON, TEXAS

PRINTHEAD INTERFACE
COMMON PRINTER
700 ASR
SCALE 2/1 D 959141 F

PART NUMBER	REV	DESCRIPTION
0959141-0001	G	PRINTHEAD INTERFACE

ITEM.	QUANTITY.	COMPONENT..	DESCRIPTION	UM
0001	00001.000	0959140-0001	PW BOARD,PRINTHEAD INTERFACE 1209-9140-000	EA
0002	00005.000	0222222-7164	NETWORK SN74164N TI- - SN-4164N	EA
0002A			Z1 THRU Z5 TI- - SN-4164N	
0003	00036.000	0972946-0077	RES FIX 3.3K OHM 5 % .25 W CARBON FILM ROH - R-25	EA
0003A			R1 THRU R36 ROH - R-25	
0004	00005.000	0958780-0001	NETWORK, SN21111N SELECTED	EA
0004A			Z6 THRU Z10	
0005	00001.000	0972924-0011	CAP FIX TANT SOLID 68 MFD 10 % 15 VOLT QPL - M3-003/1-2274	EA
0005A			C1 QPL - M3-003/1-2274	
0006	00008.000	0532736-0002	CAP FIX CERAMIC .02 MF 20/80% 25 VOLT CRL - 2-DU60E203ZAC	EA
0006A			C2 THRU C9 CRL - 2-DU60E203ZAC	
0007	00001.000	0538433-0001	COIL RF 5.60 UH .13 OHM 885 MA LT10K158 QPL - M-90542-14	EA
0007A			L1 QPL - M-90542-14	
0008	00001.000	0215756-0001	CONNECTOR,PC- 44 DOUBLE ROW .100 C/C	EA
0008A			XA1	
0009	00002.000	0411101-0057	LOCKWASHER # 4 EXTERNAL TOOTH CRES QPL - M-35335-57	EA
0010	00001.000	0959318-0001	SUPPORT,PRINT HEAD INTERFACE BD 1210-9318-028	EA
0011	00002.000	0972988-0013	SCREW 4-40 X .250 PAN HEAD CRES	EA
0012	REF	0959180-9901	DIAGRAM,LOGIC DET-PRINTHEAD INTERFACE	EA
0013	REF	0959215-9901	PROGRAM TEST,PRINTHEAD INTERFACE	EA

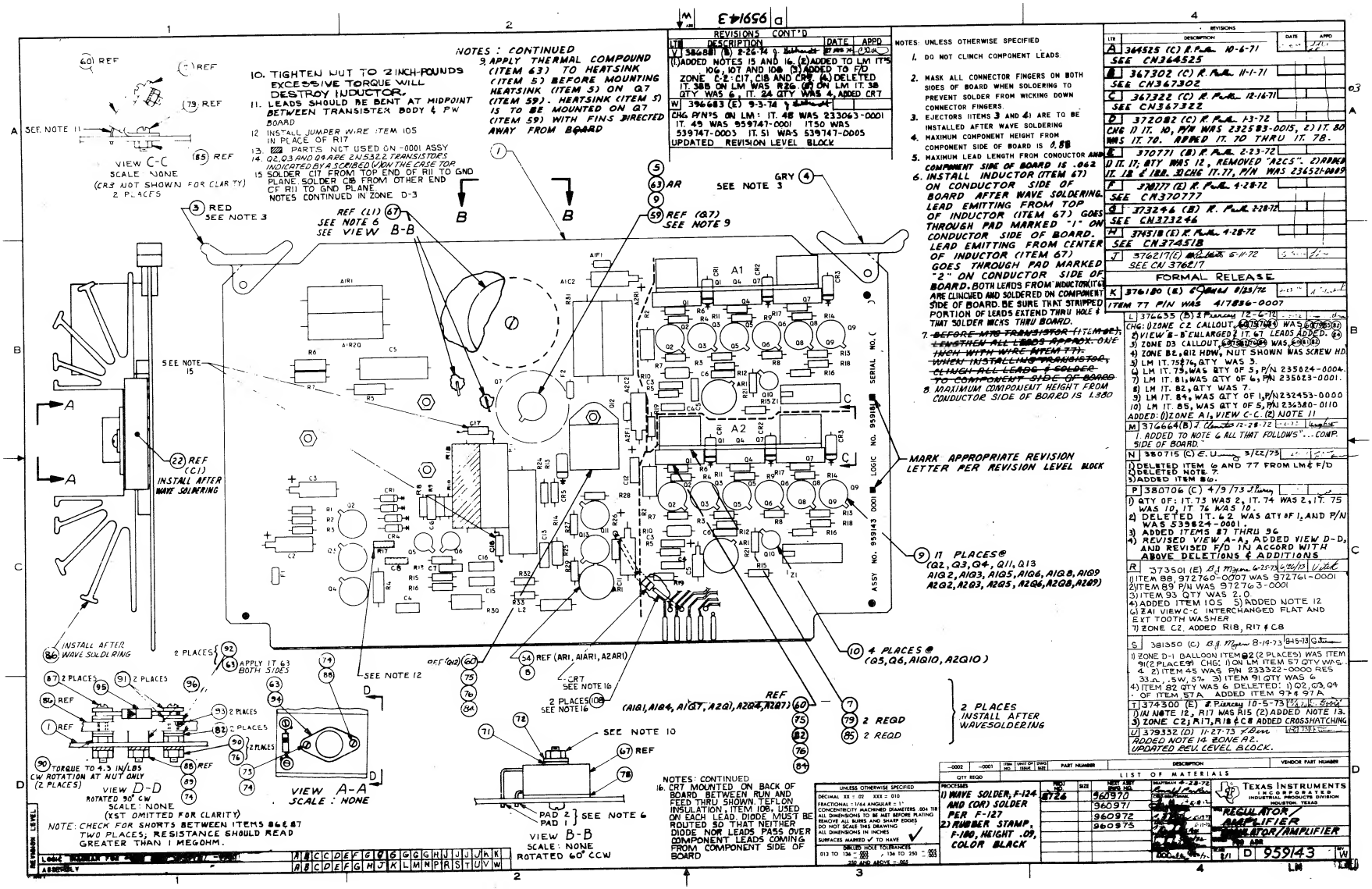
NOTES : CONTINUED
9. APPLY THERMAL COMPOUND (ITEM 63) TO HEATSINK (ITEM 5) BEFORE MOUNTING HEATSINK (ITEM 5) ON Q7 (ITEM 59). HEATSINK (ITEM 5) IS TO BE MOUNTED ON Q7 (ITEM 59) WITH FINS DIRECTED AWAY FROM BOARD
10. TIGHTEN NUT TO 2 INCH-POUNDS EXCESSIVE TORQUE WILL DESTROY INDUCTOR.
11. LEADS SHOULD BE BENT AT MIDPOINT BETWEEN TRANSISTER BODY & PW BOARD
12. INSTALL JUMPER WIRE ITEM 105 IN PLACE OF R17
13. ▨ PARTS NOT USED ON -0001 ASSY
14. Q2,Q3 AND Q4 ARE 2N5332 TRANSISTORS INDICATED BY A SCRIBED V ON THE CASE TOP
15. SOLDER C17 FROM TOP END OF R11 TO GND PLANE. SOLDER C18 FROM OTHER END OF R11 TO GND PLANE.
NOTES CONTINUED IN ZONE D-3
NOTES: UNLESS OTHERWISE SPECIFIED
1. DO NOT CLINCH COMPONENT LEADS.
2. MASK ALL CONNECTOR FINGERS ON BOTH SIDES OF BOARD WHEN SOLDERING TO PREVENT SOLDER FROM WICKING DOWN CONNECTOR FINGERS.
3. EJECTORS (ITEMS 3 AND 4) ARE TO BE INSTALLED AFTER WAVE SOLDERING
4. MAXIMUM COMPONENT HEIGHT FROM COMPONENT SIDE OF BOARD IS 0.58
5. MAXIMUM LEAD LENGTH FROM CONDUCTOR AND COMPONENT SIDE OF BOARD IS .062
6. INSTALL INDUCTOR (ITEM 67) ON CONDUCTOR SIDE OF BOARD AFTER WAVE SOLDERING. LEAD EMITTING FROM TOP OF INDUCTOR (ITEM 67) GOES THROUGH PAD MARKED "1" ON CONDUCTOR SIDE OF BOARD. LEAD EMITTING FROM CENTER OF INDUCTOR (ITEM 67) GOES THROUGH PAD MARKED "2" ON CONDUCTOR SIDE OF BOARD. BOTH LEADS FROM INDUCTOR (ITEM 67) ARE CLINCHED AND SOLDERED ON COMPONENT SIDE OF BOARD. BE SURE THAT STRIPPED PORTION OF LEADS EXTEND THRU HOLE & THAT SOLDER WICKS THRU BOARD.
7. ~~BEFORE MTG TRANSISTOR (ITEM 67), LENGTHEN ALL LEADS APPROX. ONE INCH WITH WIRE (ITEM 77). WHEN INSTALLING TRANSISTOR, CLINCH ALL LEADS & SOLDER TO COMPONENT SIDE OF BOARD~~
8. MAXIMUM COMPONENT HEIGHT FROM CONDUCTOR SIDE OF BOARD IS 1.380
MARK APPROPRIATE REVISION LETTER PER REVISION LEVEL BLOCK
SERIAL NO.
LOGIC NO. 959143 0001
ASSY NO. 959143
VIEW C-C SCALE NONE (CR3 NOT SHOWN FOR CLARITY) 2 PLACES
VIEW D-D ROTATED 90° CW SCALE: NONE (XST OMITTED FOR CLARITY)
VIEW A-A SCALE: NONE
VIEW B-B SCALE: NONE ROTATED 60° CCW
NOTE: CHECK FOR SHORTS BETWEEN ITEMS 86 & 87 TWO PLACES; RESISTANCE SHOULD READ GREATER THAN 1 MEGOHM.
NOTES: CONTINUED
16. CRT MOUNTED ON BACK OF BOARD BETWEEN RUN AND FEED THRU SHOWN TEFLON INSULATION, ITEM 106, USED ON EACH LEAD. DIODE MUST BE ROUTED SO THAT NEITHER DIODE NOR LEADS PASS OVER COMPONENT LEADS COMING FROM COMPONENT SIDE OF BOARD
2 PLACES INSTALL AFTER WAVESOLDERING
UNLESS OTHERWISE SPECIFIED
PROCESS
1) WAVE SOLDER, F-124 AND (OR) SOLDER PER F-127
2) RUBBER STAMP, F-180, HEIGHT .09, COLOR BLACK
LIST OF MATERIALS
TEXAS INSTRUMENTS INCORPORATED INDUSTRIAL SYSTEMS DIVISION HOUSTON, TEXAS
REGULATOR/AMPLIFIER
REGULATOR/AMPLIFIER
D 959143

PART NUMBER	REV	DESCRIPTION
959143-0001	W	REGULATOR/AMPLIFIER

ITEM.	QUANTITY.	COMPONENT..	DESCRIPTION	UM
0001	00001.000	959142-0001	PRT,WIRING BD.,REGULATOR/AMPLIFIER	EA
			1209-9142-000	
C003	00001.000	231802-0002	EJECTOR RED 8-200	EA
			SCA-8-200	
C004	00001.000	231802-0008	EJECTOR GRY 8-200	EA
			SCA-8-200	
0005	00001.000	232067-0002	HEATSINK TRANSISTOR TC-5 WAK-NF-207	EA
			419-368-0002 05820	
0007	00002.000	959319-0001	BRACKET,TRANSISTOR MTG	EA
			1209-9319-015	
0008	00003.000	232583-0005	PAD INTEGRATED CKT.TO-5 8 LEADS .350 DIA	EA
			THP-7717-107-N-WHT	
0009	00018.000	232583-0008	PAD XST MTG TO-5 WHT	EA
			THR-7717-4N	
0010	00004.000	185113-0001	SPACER XST TC-18 CASE	EA
			* -	
C011	00001.000	230826-0001	CAP 39.000 MF 10V 10% CASE SIZE B	EA
			MIL-CS13BC396K	
0011A			C11	
			MIL-CS13BC396K	
0012	00001.000	230455-5000	CAP 470.00 PF 200V 1C%	EA
			MIL-CK05BX471K	
0012A			C6	
			MIL-CK05BX471K	
0013	00002.000	230482-0004	CAP .0010 MF 200V 1C%	EA
			MIL-CK05BX102K	
C013A			C4,C7	
			MIL-CK05BX102K	
0016	00001.000	230588-0000	CAP .C470 MF 100V +CR-5%	EA
			TRW-663UW-47351	
0016A			C5	
			TRW-663UW-47351	
0017	00011.000	230587-0055	CAP .047 MF 100V 10.%	EA
			MIL-CK06BX473K	
0017A			C12 C13 C15 C16	
			MIL-CK06BX473K	
0017B			A1C3 THRU A1C6,A2C3 A2C4 A2C6	
			MIL-CK06BX473K	
0018	00001.000	230716-0003	CAP 2.200 MF 20V 10.% CASE SIZE A	EA
			MIL-CS13BE225K	
0018A			A2C5	
			MIL-CS13BE225K	
0019	00004.000	535227-0037	CAPACITOR 2.2 MF 125V 10%	EA
			SPR-150D225X9125B2	
0019A			C2,C3, ,A1C2,A2C2	
			SPR-150D225X9125B2	
0022	00001.000	539727-0001	CAPACITOR 100.00 MF 65V	EA
			SAN-556EJ1C1W065B	
0022A			C1	
			SAN-556EJ101W065B	
0024	00005.000	231702-0002	DIODE 1N9148	EA
			- 3-000	
0024A			CR1 THRU CR4,CR7	
			- 3-000	
0026	00007.000	539513-0001	DIODE DSR 5101	EA
			TRW-DSR 5101	
0026A			A1CR1 THRU A1CR3,A2CR1 THRU	
			TRW-DSR 5101	
0026B			A2CR3 CR5	
			TRW-DSR 5101	
C029	00003.000	233151-0000	RES 2.7CCC OHM .25W 5.	EA
			AB -CB27G5	
0029A			R1,R2,R3	
			AB -CB27G5	
0031	00007.000	233221-0000	RES 1C.CCC OHM .25W 5.	EA
			AB -CB1005	
0031A			R28,A1R6,A2R6,A1R11,A2R11,	
			AB -CB1C05	
0031B			A1R17,A2R17	
			AB -CB1005	
0032	00001.000	234061-0000	RES 5600.0 OHM .25W 5.	EA
			AB -CB5625	
0032A			R15	
			AB -CB5625	
0033	00007.000	233397-0000	RES 68.000 OHM .25W 5.	EA
			AB -CB6805	
0033A			R12 A1R7 A2R7 A1R12 A2R12	
			AB -CB6805	
0033B			A1R18 A2R18	
			AB -CB6805	

PART NUMBER	REV	DESCRIPTION
959143-0001	W	REGULATOR/AMPLIFIER

ITEM.	QUANTITY.	COMPONENT..	DESCRIPTION.	UM
0034	00010.000	233418-0000	RES 82.000 OHM .25W 5.	EA
			AB -CB8205	
0034A			R8,R13,R14,A1R4,A2R4,A1R9,R27	
			AB -CB8205	
0034B			A2R9,A1R14,A2R14	
			AB -CB8205	
0035	00007.000	233466-0000	RES 120.00 OHM .25W 5.	EA
			AB -CB1215	
0035A			R29,A1R3,A2R3,A1R8,A2R8,A1R13	
			AB -CB1215	
0035B			A2R13	
			AB -CB1215	
0036	00001.000	233600-0000	RES 330.00 OHM .25W 5.	EA
			AB -CB3315	
0036A			R10	
			AB -CB3315	
0038	00005.000	233658-0000	RES 680.00 OHM .25W 5.	EA
			AB -CB6815	
0038A			R9,A1R15,A2R15,A1R16,A2R16	
			AB -CB6815	
0039	00005.000	233896-0000	RES 2200.00 OHM .25W 5%	EA
			AB -CB2225	
0039A			A1R5 A2R5 R33 A1R21 A2R21	
			AB -CB2225	
0040	00003.000	233929-0004	RES,2610.0 OHM .25W 1% TI-RC55D2611F	EA
			539-370-0425 01295	
0040A			R25 ,A1R10,A2R10	
			539-370-0425 01295	
0042	00003.000	234225-0000	RES 15000. OHM .25W 5.	EA
			AB -CB1535	
0042A			A1R19,A2R19,R32	
			AB -CB1535	
0043	00001.000	234395-0000	RES 56000. OHM .25W 5.	EA
			AB -CB5635	
0043A			R16	
			AB -CB5635	
0044	00001.000	233181-0000	RES 4.7000 OHM .5 W 5.	EA
			AB -EB47G5	
0044A			R5	
			AB -EB47G5	
0045	00001.000	233442-0000	RES 100.00 OHM .5 W 5.	EA
			AB -EB1015	
0045A			R4	
			AB -EB3305	
0046	00002.000	233700-0000	RES 680.00 OHM .5 W 5.	EA
			AB -EB6815	
0046A			R6,R7	
			AB -EB6815	
0048	00002.000	972554-0001	RESISTOR,FIXED,WIREWOUND.1 OHM 5W 5%	EA
			SEE- TI DRAWING	
0048A			R11 R24	
			SEE- TI DRAWING	
0049	00003.000	972554-0006	RESISTOR,FIXED,WIREWOUND .5 OHM 3W 1%	EA
			SEE- TI DRAWING	
0049A			A1R2 A2R2 R30	
			SEE- TI DRAWING	
0050	00002.000	972554-0008	RESISTOR,FIXED,WIREWOUND 7.5 OHM 7W 1%	EA
			SEE- TI DRAWING	
0050A			A2R1 R31	
			SEE- TI DRAWING	
0051	00002.000	972554-0009	RESISTOR,FIXED,WIREWOUND 30 OHM 7W 1%	EA
			SEE- TI DRAWING	
0051A			A1R1 A1R20	
			SEE- TI DRAWING	
0052	00002.000	222222-7438	NETWORK SN7438N	EA
0052A			A1Z1 A2Z1	
0054	00003.000	222225-0311	NETWORK LM311H	EA
0054A			A1AR1,A2AR1,AR1	
0055	00000.000	772494-0001	TRANSISTOR 2N5322	EA
			RCA-2N5322	
0055A			A1Q2 A1Q5 A1Q8 A2Q2 A2Q5 A2Q8	
			RCA-2N5322	
0056	00001.000	236083-0001	TRANSISTOR 2N2907A	EA
			418-404-0004 QPL19500	
0056A			Q5	
			418-404-0004 QPL19500	

PART NUMBER	REV	DESCRIPTION
959143-0001	W	REGULATOR/AMPLIFIER

ITEM.	QUANTITY.	COMPONENT..	DESCRIPTION.	UM
C057	00001.000	236C82-0002	TRANSISTOR 2N2905A 418-535-0004 QPL19500	EA
0057A			Q11 418-535-0004 QPL19500	
0058	00001.000	236C67-0001	TRANSISTOR 2N2222A 418-338-0004 QPL19500	EA
0058A			Q6 418-338-0004 QPL19500	
0059	00008.000	236C61-0C01	XST 2N2102 -2N2102	EA
0059A			Q7,A1Q3,A2C3,A1Q6,A2Q6,A1Q9 -2N2102	
0059B			A2C9,C13 -2N2102	
C06C	000C7.000	958759-0003	XST TIP 35B SOA TESTED TI -TIP35B	EA
0060A			A1Q1,A2Q1,A1Q4,A2Q4,A1Q7,A2Q7 TI -TIP35B	
0060B			Q12 TI -TIP35B	
0061	000C2.000	236C71-0002	TRANSISTOR 2N2369A - 3-000	EA
0061A			A1Q10 A2Q10 - 3-000	
0063	AR	231143-0001	COMPOUND THERMAL WAK--120-8 OZ	EA
0064	00001.000	537399-0012	FUSE 5AMP .014 OHM LIT-276005	EA
C064A			F1 LIT-276005	
0065	00001.000	231928-0100	FUSE 1 AMP PICO 276001. LIT-276001.	EA
0065A			F2 LIT-276001.	
0067	00001.000	959335-0001	INDUCTOR,5V REGULATOR	EA
0067A			L1	
C068	00001.000	231C38-0036	INDUCTOR 10.0 UH .9 OHM 10. DEL-1537-36	EA
0068A			L2 DEL-1537-36	
0069	00002.000	537399-0010	FUSE 3AMP LIT-276003	EA
0069A			A1F1 A2F1 LIT-276003	
0070	AR	235182-0002	SEALANT LOCTITE GRADE C BLUE LCC-84	TU
0071	00001.000	234866-0100	RING O 7/32X11/32X1/16 P-K-2-009-N219-7	EA
0072	00001.000	236399-0000	WASHER #10 FLT SS 1/32 THK. -#10L FLAT	EA
C073	00001.000	235C54-0001	SCREW 6-32X3/8 BH SST	EA
0074	00003.000	236386-0000	WASHER #6 EXT TOOTH LOCK SST -#6	EA
0075	00007.000	235C24-0002	SCREW 4-40X5/16 BH SST	EA
0076	00009.000	236374-0000	WASHER #4 EXT TH SST -#4	EA
C078	00001.000	959254-0C01	INSULATOR 1209-9254-C07	EA
0079	00004.000	235023-0020	SCREW 4-40X1/4 NYLON CLEAR RH	EA
0080	REF	959181-9901	DIAGRAM,LOGIC,DETAILED,REG/AMPLIFIER	EA
C082	00008.000	236377-0000	WASHER #4 FLT .125 X .312 SST -#4 FLAT	EA
0083	REF	959208-9901	PROGRAM TEST,REG/AMP	EA
C084	00007.000	232452-0000	NUT #4-40X1/4X3/32 THK SST	EA
0085	00004.000	232451-0000	NUT 4-40 NYLON	EA
C086	00001.000	959316-0001	HEATSINK,REGULATOR/AMPLIFIER 1209-9316-C16	EA
0087	00002.000	972760-0301	SCREW,#4 X .235 X .75 NP BRS	EA
0088	00001.000	972760-0007	SCREW,#6 X .290 X .75 NP BRS	EA

PART NUMBER	REV	DESCRIPTION
959143-0001	W	REGULATOR/AMPLIFIER

ITEM.	QUANTITY.	COMPONENT..	DESCRIPTION	UM
C089	00001.000	972762-0007	NUT,HEX-#6 X 5/16 X .114 NP BRS	EA
C090	00004.000	972762-0001	NUT,HEX-#4 X 1/4 X .098 NP BRS	EA
0091	00004.000	971427-0001	WASHER,400 OD X.125 ID	EA
			1209-1427-C00	
0092	00004.000	236455-0100	WASHER MICA 1/8 ID X 1/2 OD	EA
			MUS--25M-50M	
0093	00CCC.500	236270-0000	TUBING TEFLON #10	FT
			-#10	
C094	00001.000	972238-0001	TRANSISTOR-SEMICONDUCTOR DEVICE	EA
			MOT--2N6338	
0094A			Q1	
			MOT--2N6338	
C095	00001.000	972116-0001	DIODE UTG1249 (MAY USE 1N5808/1N5809)	EA
			UNT--UTG 1249	
C095A			CR6	
			UNT--UTG 1249	
C096	00001.000	094813-0002	SPACER-#6 SCREW 1/4 OD X 1/8 C1+CC+03	EA
0097	00C03.000	971453-0001	XSTR-SELECTED 2N5322	EA
			1210-1453-C00	
C097A			Q2,Q3,Q4	
			1210-1453-C00	
0105	0000C.500	236520-0000	WIRE 20 AWG 1 COND BLACK PVC STRD	FT
			-#20 BLK	
0106	00002.000	972225-0510	CAP 1 MF 50V +80-20% CERAMIC	EA
0106A			C17,C18	
0107	00001.000	233620-0000	RES 390.00 OHM .25W 5.	EA
			AB -CR3915	
0107A			R26	
			AB -CR3915	
0108	00000.100	236275-0003	SLEEVING,TEFLON #22	FT

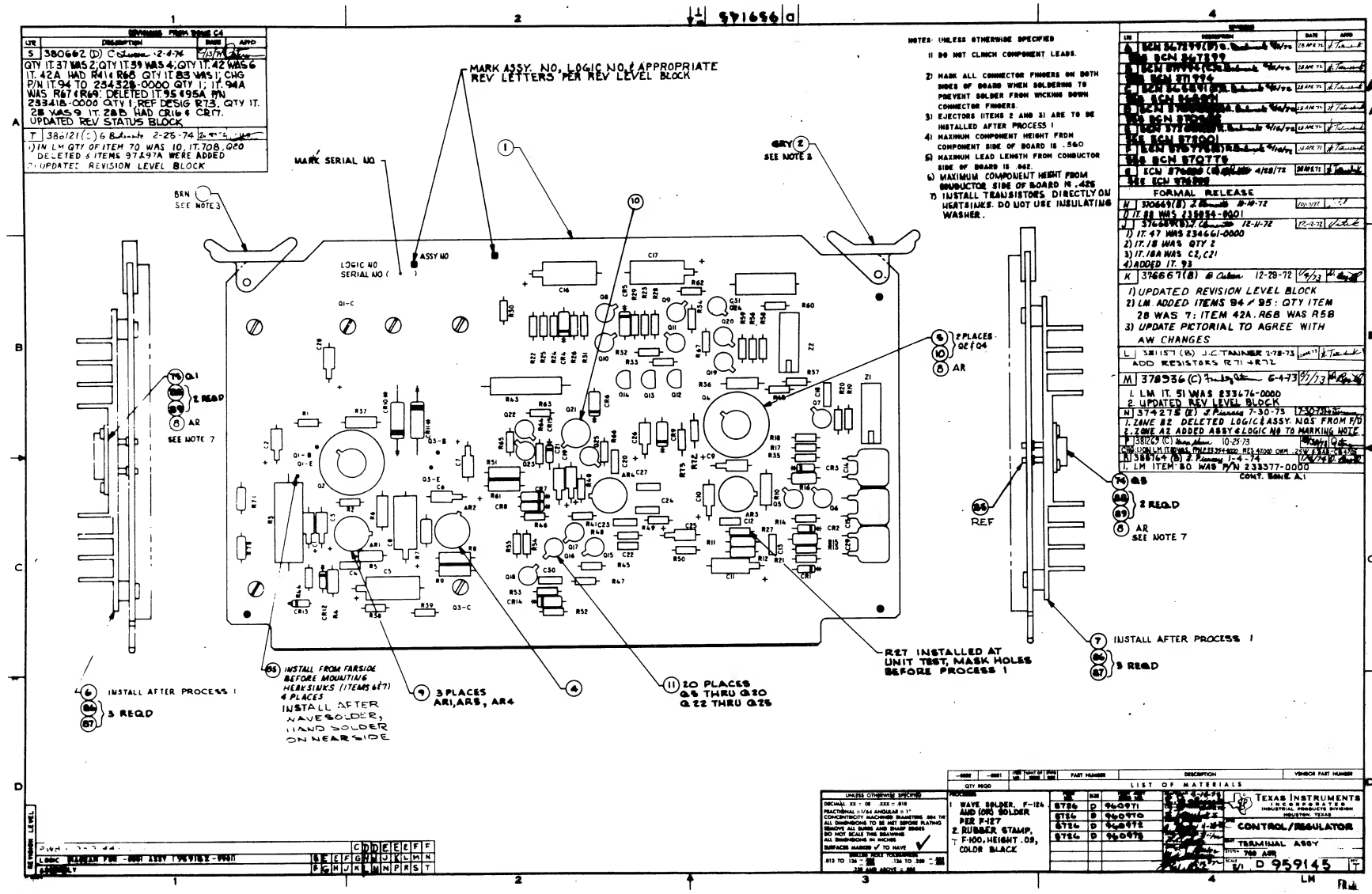

LTR	DESCRIPTION	DATE	APPD
S	380662 (D) C. Lemon 2-4-74 1) QTY IT. 37 WAS 2, QTY IT. 39 WAS 4, QTY IT. 42 WAS 6 IT. 42A HAD R41 & R68 QTY IT. 83 WAS 1; CHG P/N IT. 94 TO 233428-0000 QTY 1; IT. 94A WAS R67 & R69; DELETED IT. 95 & 95A P/N 233418-0000 QTY 1, REF DESIG R73. QTY IT. 28 WAS 9. IT. 28B HAD CR16 & CR17. UPDATED REV STATUS BLOCK.	2-4-74	
T	386121 (-) G. Bedenaugh 2-25-74 1) IN LM QTY OF ITEM 70 WAS 10, IT. 70B, Q20 DELETED 6 ITEMS 97 & 97A WERE ADDED 2) UPDATED REVISION LEVEL BLOCK	2-25-74	

LTR	DESCRIPTION	DATE	APPD
A	ECN 871999 (D) G. Bedenaugh 2-25-74	25 APR 71	
B	ECN 871999	25 APR 71	
C	ECN 871994	25 APR 71	
D	ECN 871995	25 APR 71	
E	ECN 871996	25 APR 71	
F	ECN 871997	25 APR 71	
G	ECN 871998	25 APR 71	
H	ECN 871999	25 APR 71	
J	ECN 871999 (A) 4/28/72	28 APR 71	
K	ECN 871999		
	FORMAL RELEASE		
M	380697 (B) 2 B. Bedenaugh 8-10-72 1) IT. 88 WAS 233854-0001	10-27-72	
N	376684 (B) J. C. Tanner 12-11-72 1) IT. 47 WAS 234661-0000 2) IT. 18 WAS QTY 2 3) IT. 18A WAS C2, C21 4) ADDED IT. 93	12-11-72	
K	376667 (B) B. Bedenaugh 12-29-72 1) UPDATED REVISION LEVEL BLOCK 2) LM ADDED ITEMS 94 & 95: QTY ITEM 28 WAS 7: ITEM 42A. R68 WAS R58 3) UPDATE PICTORIAL TO AGREE WITH AW CHANGES	1-2-73	
L	381157 (B) J. C. TANNER 2-28-73 ADD RESISTORS R71 & R72	2-28-73	
M	378936 (C) Tom Bedenaugh 6-4-73 1. LM IT. 51 WAS 233674-0000 2. UPDATED REV LEVEL BLOCK	6-4-73	
N	374278 (E) J. Penney 7-30-73 1. ZONE B2 DELETED LOGIC & ASSY. NOS FROM F/D 2. ZONE A2 ADDED ASSY & LOGIC NO TO MARKING NOTE	7-30-73	
P	381129 (C) Tom Bedenaugh 10-25-73 CHG LIONEL MITTENDORF, PART 233544-0000 RES 47000 OHM .25W ±5% TO 47K OHM ±5%	10-25-73	
R	381164 (B) J. Penney 1-4-74 1. LM ITEM 80 WAS P/N 233577-0000	1-4-74	

CONT. ZONE A1

QTY REQD	PART NUMBER	DESCRIPTION	VENDOR PART NUMBER
		LIST OF MATERIALS	

PROCESS
1. WAVE SOLDER, F-124 AND (OR) SOLDER PER F-127
2. RUBBER STAMP, F-100, HEIGHT .09, COLOR BLACK

8784	D	960971	
8784	D	960970	
8784	D	960972	
8784	D	960973	

UNLESS OTHERWISE SPECIFIED
DECIMAL XX = .01 XXX = .010
FRACTIONAL = 1/64 ANGULAR = 1°
CONCENTRICITY MACHINED DIAMETERS .004 TIR
ALL DIMENSIONS TO BE HOT BEFORE PLATING
REMOVE ALL BURRS AND SHARP EDGES
DO NOT SCALE THIS DRAWING
ALL DIMENSIONS IN INCHES
SURFACES MARKED √ TO HAVE
MACHINE FINISH TOLERANCES
.013 TO 126 = ±.005
126 TO 250 = ±.010
250 AND ABOVE = ±.020

TEXAS INSTRUMENTS INCORPORATED
INDUSTRIAL PRODUCTS DIVISION
HOUSTON, TEXAS

CONTROL/REGULATOR
TERMINAL ASSY
SIZE D 959145 REV LM
SCALE 2/1 SHEET 1 OF 1

LOGIC ASSEMBLY FOR -0001 ASSY 1 REVISION -0001

	C	D	D	E	E	E	F	F
	E	F	G	H	J	K	L	M	N
	F	G	H	J	K	L	M	N	P	R	S	T

PART NUMBER	REV	DESCRIPTION
959145-0001	T	CONTROL/REGULATOR

ITM.	QTY	COMPONENT..	DESCRIPTION
001	001	959144-0001	PW BOARD,CONTROL/REGULATOR
			1209-9144-000
002	001	231802-0008	EJECTOR GRY 8-200
			SCA-8-200
003	001	231802-0001	EJECTOR BRN 8-200
			SCA-8-200
004	001	536687-0001	SPACER,TRANSIPAD
			MR -10050-N
005	002	232067-0001	HEATSINK TRANSISTOR WAK-MF-205
			419-253-0003 05820
006	001	959314-0001	HEATSINK,+12V CONTROL/REGULATOR
			1209-9314-013
007	001	959315-0001	HEATSINK,-12V CONTROL/REGULATOR
			1209-9315-015
008	AR	231143-0001	COMPOUND THERMAL
			WAK--120-8 OZ
009	003	232583-0005	PAD INTEGRATED CKT.TO-5 8 LEADS .350 DIA
			THR-7717-107-N-WHT
010	003	232583-0008	PAD XST MTG TO-5 WHT
			THR-7717-4N
011	020	185113-0001	SPACER XST TO-18 CASE
			* -
012	001	230618-0100	CAP 0.1000 MF 100V 10. %
			MIL-CK068X104K
012A			C30
			MIL-CK068X104K
013	002	230396-1000	CAP 47.00 PF 200V 10. %
			MIL-CK058X470K
013A			C12 C13
			MIL-CK058X470K
014	001	230425-9000	CAP 150.00 PF 200V 10%
			MIL-CK058X151K
014A			C4
			MIL-CK058X151K
015	003	230454-0000	CAP 430.0 PF 500V 01
			ELM-DM-15-431F
015A			C14,C15,C29
			ELM-DM-15-431F
016	001	230482-0004	CAP .0010 MF 200V 10%
			MIL-CK058X102K
016A			C22
			MIL-CK058X102K
017	005	230587-0055	CAP .047 MF 100V 10.%
			MIL-CK068X473K
017A			C18 C20 C23 C24 C27
			MIL-CK068X473K
018	001	230640-0004	CAP .2200 MF 35V 10
			SPR-150D224X9035A2
018A			C2
			SPR-150D224X9035A2
019	004	230688-0001	CAP 1.000 MF 50V 10%
			SPR-150D105X9050A
019A			C1,C7,C9,C28
			SPR-150D105X9050A
020	006	230716-0003	CAP 2.200 MF 20V 10.% CASE SIZE A
			MIL-CS13BE225K
020A			C3,C10,C26,C19,C25,C6
			MIL-CS13BE225K
021	001	230760-0000	CAP 6.800 MF 35V 10% CASE SIZE B
			MIL-CS13BF685K
021A			C11
			MIL-CS13BF685K
023	003	230812-0001	CAP 22.00 MF 35V 10% CASE SIZE C
			SPR-150D226X9035R
023A			C5,C8,C16
			SPR-150D226X9035R
024	001	230855-0001	CAP 68.000 MF 15V 10% CASE SIZE C
			MIL-CS13BD686K
024A			C17
			MIL-CS13BD686K
025	001	230581-0000	CAP .0330 MF 100V +OR-5%
			TRW-663UW-33351
025A			C31
			TRW-663UW-33351
027	002	231768-0001	DIODE 1N4720 SILICON LOW-CURRENT
			MSC-1N4720
027A			CR10,CR11
			MSC-1N4720
028	007	231702-0002	DIODE 1N9148
			- 3-000
028A			CR1 CR2 CR3 CR7 CR8 CR12
			- 3-000

028A			CR15
			- 3-000
029	001	231692-0001	DIODE 1N752A VOLTAGE REG 5.6V 5%
			- 3-000
029A			CR9
			- 3-000
030	001	231696-0001	DIODE IN756A
			TI -IN756A
030A			CR6
			TI -IN756A
031	002	231699-0001	DIODE IN759A
			TI -IN759A
031A			CR4,CR5
			TI -IN759A
034	003	233333-0000	RES 39.000 OHM .25W 5.
			AB -CB3905
034A			R2,R38,R39
			AB -CB3905
035	001	233397-0000	RES 68.000 OHM .25W 5.
			AB -CB6805
035A			R1
			AB -CB6805
036	001	233518-0000	RES 180.00 OHM .25W 5.
			AB -CB1815
036A			R29
			AB -CB1815
037	003	233650-0000	RES 470.00 OHM .25W 5.
			AB -CB4715
037A			R19 R52 R41
			AB -CB4715
038	004	233756-0000	RES 1000.0 OHM .25W 5.
			AB -CB1025
038A			R18 R22 R45 R65
			AB -CB1025
039	006	233850-0000	RES 1800.0 OHM .25W 5.
			AB -CB1825
039A			R14 R17 R40 R50 R58 R68
			AB -CB1825
040	007	233932-0000	RES 2700.0 OHM .25W 5.
			AB -CB2725
040A			R20 R26 R33 R48 R57 R59 R66
			AB -CB2725
041	004	234017-0000	RES 4700.00 OHM .25W 5%
			AB -CB4725
041A			R25 R30 R47 R64
			AB -CB4725
042	004	234153-0000	RES 10000.00 OHM .25W 5%
			AB -CB1035
042A			R35 R56 R60 R63
			AB -CB1035
043	001	234225-0000	RES 15000. OHM .25W 5.
			AB -CB1535
043A			R32
			AB -CB1535
044	003	234281-0000	RES 22000. OHM .25W 5.
			AB -CB2235
044A			R23,R24,R28
			AB -CB2235
045	004	234477-0000	RES 100000. OHM .25W 5.
			AB -CB1045
045A			R13 R21 R34 R62
			AB -CB1045
046	001	234512-0000	RES 150000. OHM .25W 5.
			AB -CB1545
046A			R31
			AB -CB1545
047	001	233723-0000	RES 820.00 OHM .25W 5%
			AB -CB8215
047A			R46
			AB -CB8215
048	001	234105-0000	RES 7500.0 OHM .25W 5.
			AB -CB7525
048A			R49
			AB -CB7525
049	004	233153-0000	RES 2.7000 OHM .5 W 5.
			AB -EB27G5
049A			R8,R9,R36,R37
			AB -EB27G5
050	001	233181-0000	RES 4.7000 OHM .5 W 5.
			AB -EB47G5
050A			R10
			AB -EB47G5
051	001	233668-0000	RES 510.00 OHM .5 W 5.
			AB -EB5115
051A			R6
			AB -EB5115

052	001	233841-0010	RES 1600.00 OHM 5.W 5.% OHM-4628
052A			R43 AB -EB6815
053	002	233806-0000	RES 1300.0 OHM .5 W 5. AB -EB1325
053A			R51,R61 AB -EB1325
054	001	233908-2372	RES 2370.00 OHM .125W 1.% TI -MC55C-T2-50PPM/C
054A			R7 TI -MC55C-T2-50PPM/C
055	001	233956-1000	RES 3160. OHM .25W 1% TI-MC55D3161F 539-370-0433 01295
055A			R12 539-370-0433 01295
056	001	234088-0002	RES 6650.00 OHM .125W 1.% TI -MC55C-T2-50PPM/C
056A			R11 TI -MC55C-T2-50PPM/C
057	001	234127-0007	RES 8450.0 OHM .125W 1.% TI -MC55C-T2-50PPM/C
057A			R5 TI -MC55C-T2-50PPM/C
058	001	234195-0025	RES 11800. OHM .25W 1% TI-MC55D1182F 539-370-0488 01295
058A			R4 539-370-0488 01295
059	002	234304-0010	RES 26700. OHM .13W 1.% TI -MC55C T2-50PPM/C
059A			R15,R16 TI -MC55C T2-50PPM/C
060	003	399999-9702	RESISTOR SELECTED AT UNIT TEST
060A			R27 R70 R71
061	001	233081-0002	RES 0.5000 OHM 5.W 5.% RCL-T-5
061A			R3 RCL-T-5
063	001	222222-7474	NETWORK SN7474N - 3-000
063A			Z1 - 3-000
064	001	222225-0311	DIFFERENTIAL COMPARATOR LM311H
064A			AR4
065	002	232426-0100	NETWORK VOLTAGE REGULATOR NSC-LM-305
065A			AR1,AR3 NSC-LM-305
066	001	222224-0304	NETWORK LM304H VOLTAGE REGULATOR -LM304H
066A			AR2 -LM304H
068	003	248490-0073	XST,HI-RELBL N-CHAN FET SKA5731 NKL LEAD
068A			Q12,Q13,Q14
069	001	236017-0000	TRANSISTOR,2N930 418-130-0002 QPL19500
069A			Q16 418-130-0002 QPL19500
070	009	236067-0001	TRANSISTOR 2N2222A 418-338-0004 QPL19500
070A			Q5,Q6,Q8,Q9,Q11,Q15,Q17,Q19 418-338-0004 QPL19500
070B			Q23 418-338-0004 QPL19500
071	002	236071-0002	TRANSISTOR 2N2369A - 3-000
071A			Q7 Q25 - 3-000
072	004	236083-0001	TRANSISTOR 2N2907A 418-404-0004 QPL19500
072A			Q10 Q18 Q22 Q24 418-404-0004 QPL19500
073	002	236082-0002	TRANSISTOR 2N2905A 418-535-0004 QPL19500
073A			Q2,Q4 418-535-0004 QPL19500
074	001	236091-0015	XST- 2N3740 MOT-2N3740
074A			Q3 MOT-2N3740
075	001	236084-0003	XST 2N3055 -2N3055

075A			Q1
			-2N3055
077	001	233221-0000	RES 10.000 OHM .25W 5.
			AB -CB1005
077A			R53
			AB -CB1005
079	001	233180-0000	RES 4.7000 OHM .25W 5.
			AB -CB47G5
079A			R54
			AB -CB47G5
080	001	233321-0000	RES 33.000 OHM .25W 5.
			AB -CB3305
080A			R55
			AB -CB5105
081	001	231691-0001	DIODE IN751A
			TI -IN751A
081A			CR14
			TI -IN751A
082	001	231784-0001	DIODE MPD300 3 PELLET SILICON MULTI
			GE -MPD300
082A			CR13
			GE -MPD300
083	002	234089-0000	RES 6800.0 OHM .25W 5.
			AB -CB6825
083A			R44 R72
			AB -CB6825
084	001	222222-7122	NETWORK SN74122N
084A			Z2
085	004	539493-0002	RECEPTACLE,ACCEPTS LEAD SIZE.018-.040TIN
			AMP-380635-2
086	006	235023-0001	SCREW 4-40X1/4 BH SST
087	006	236374-0000	WASHER #4 EXT TH SST
			-#4
088	004	235052-0001	SCREW 6-32X1/4 BH SST
089	004	236386-0000	WASHER #6 EXT TOOTH LOCK SST
			-#6
090	001	236052-0000	TRANSISTOR 2N1711
			418-288-0001 QPL19500
090A			Q21
			418-288-0001 QPL19500
091	REF	959142-9901	DIAGRAM,LOGIC,DETAILED,CONTROL/REGULATOR
092	REF	959210-9901	PROGRAM TEST,CONTROL/REGULATOR
093	001	230613-0000	CAP .1000 MF 35V 10
			SPR-150D104X9035A2
093A			C21
			SPR-150D104X9035A2
094	001	234328-0000	RES 33000. OHM .25W 5.
			AB -CB3335
094A			R67
			AB -CB3335
096	001	233418-0000	RES 82.000 OHM .25W 5.
			AB -CB8205
096A			R73
			AB -CB8205
097	001	972224-0001	TRANSISTOR 2N2222A SELECTED
			1209-2224-000
097A			Q20
			1209-2224-000

D 959147 N

NOTES: UNLESS OTHERWISE SPECIFIED

1) DO NOT CLINCH COMPONENT LEADS
2) DO NOT SOLDER ON COMPONENT SIDE
3) MASK ALL CONNECTOR FINGERS ON BOTH SIDES OF BOARD WHEN SOLDERING TO PREVENT SOLDER FROM WICKING DOWN CONNECTOR FINGERS
4) EJECTORS (ITEMS 2 AND 6) ARE TO BE INSTALLED AFTER WAVE SOLDERING
5) MAXIMUM COMPONENT HEIGHT FROM COMPONENT SIDE OF BOARD IS .375
6) MAXIMUM LEAD LENGTH FROM CONDUCTOR SIDE OF BOARD IS .062

MARK APPROPRIATE REV LETTER PER REVISION LEVEL BLOCK

REVISIONS

LTR	DESCRIPTION	DATE	APPD
E	372308 (D) D. Bale 8-23-72 REDRAWN W/CHG'S.	8-31-72	
F	376664 (E) 10-18-72 DELETED: ZONE C1, PICTORIAL OF Z1 ADDED: ZONE C3, PICTORIAL OF R1; Z) NOTE 7		
G	(A) 12-8-72 UPDATED WD TO AGREE WITH EXISTING ARTWORK	12/13/72	
H	(B) 12-21-72 UPDATED WD TO AGREE WITH EXISTING ARTWORK		
J	381095 (B) 1-3-73 UPDATED F/D TO AGREE WITH EXISTING ARTWORK ADDED Z1		
K	381354 (E) 10-3-73 1. LM ITEM 19 WAS P/N 222222-1195		
L	381353 (B) 11-21-73 ECN FOR CUT & JUMPER REWORK. UPDATED REV. LEVEL BLOCK. ALL BOARDS MARKED REV. K ARE ACTUALLY REV. L.	11/29/73	
M	391125 (D) 5-29-74 UPDATED REVISION LEVEL BLOCK & ADDED PWB TO IT.	5/29/74	
N	396699 (D) 8-14-74 CHG: LM IT. 3 WAS: 230906-0000, 150MF, CASE SIZE D UPDATED REV LEVEL BLOCK	8/15/74	

REVISION LEVEL

PWB (959146)											N	N
LOGIC DIAGRAM FOR -0001 ASSY (959163-9901)	A	B	C	D	D	D	E	F	G	H	J	K
ASSEMBLY	A	B	C	C	D	E	F	G	H	J	K	L	M	N

UNLESS OTHERWISE SPECIFIED
DECIMAL .XX ± .02 .XXX ± .010
FRACTIONAL ± 1/64 ANGULAR ± 1°
CONCENTRICITY MACHINED DIAMETERS .004 TIR
ALL DIMENSIONS TO BE MET BEFORE PLATING
REMOVE ALL BURRS AND SHARP EDGES
DO NOT SCALE THIS DRAWING
ALL DIMENSIONS IN INCHES
SURFACES MARKED ✓ TO NONE

PROCESSES
1 WAVE SOLDER, F-124
2 RUBBER STAMP, F-100, HEIGHT .09, COLOR BLACK

-0002	-0001	ITEM NO	UNIT OF ISSUE	DWG SIZE	PART NUMBER	DESCRIPTION	VENDOR PART NUMBER
QTY REQD						LIST OF MATERIALS	

TEXAS INSTRUMENTS INCORPORATED
INDUSTRIAL PRODUCTS DIVISION
HOUSTON, TEXAS

TERMINAL CONTROL
TERMINAL ASSY
700 ASR
SCALE 2/1 D 959147 REV N

LM FILMED

PART NUMBER	REV	DESCRIPTION
959147-0001	N	TERMINAL CONTROL,ASR

ITEM.	QUANTITY.	COMPONENT..	DESCRIPTION.	UM
0001	00001.000	959146-0001	PWB,ASR TERMINAL CONTROL 1209-9146-000	EA
0002	00001.000	231862-0009	EJECTOR WHT 8-200 - 0-000	EA
0003	00001.000	230855-0001	CAP 68.000 MF 15V 10% CASE SIZE C MIL-CS13BD686K	EA
C003A			C1 MIL-CS13BD686K	
0004	00010.000	230561-0000	CAP .02000 MF 25V 80/-20 % ERI-5835Y5U203Z	EA
0004A			C2 THRU C11 ERI-5835Y5U203Z	
0005	00001.000	418C53-0010	COIL 5.60 UH .13 OHMS 10% MIL-MS90542-14	EA
0005A			L1 MIL-MS90542-14	
0006	00001.000	231862-0004	EJECTOR YEL 8-200 SCA-8-200	EA
C007	00002.000	222222-7400	NETWORK SN7400N - 3-000	EA
0007A			Z1,Z14 - 3-000	
0008	00002.000	222222-7402	NETWORK SN7402N TI--SN7402N	EA
C008A			Z2 Z25 TI--SN7402N	
C009	00004.000	222222-7408	NETWORK-SN7408N	EA
0009A			Z15 Z20 Z21 Z23	
0010	00003.000	222222-7404	NETWORK SN7404N	EA
C010A			Z13 Z16 Z18	
0011	00001.000	222222-7410	NETWORK SN7410N - 3-000	EA
0011A			Z25 - 3-000	
0012	00002.000	222222-7427	NETWORK SN7427N TI--SN7427N	EA
0012A			Z30 Z32 TI--SN7427N	
0013	00003.000	222222-7451	NETWORK SN7451N -SN7451N	EA
0013A			Z12 Z26 Z27 -SN7451N	
0014	00004.000	222222-7474	NETWORK SN7474N - 3-000	EA
0014A			Z8 Z9 Z10 Z24 - 3-000	
0015	00001.000	222222-7157	NETWORK SN74157N	EA
C015A			Z28	
0016	00001.000	222222-7166	NETWORK SN74166N	EA
C016A			Z11	
C017	00002.000	222222-7174	NETWORK SN74174N	EA
0017A			Z5 Z33	
0018	00003.000	222222-7175	NETWORK SN74175N	EA
0018A			Z3 Z4 Z7	
C019	00001.000	222222-7191	NETWORK SN74191N	EA
0019A			Z22	
C020	00001.000	222222-7454	NETWORK SN7454N -SN7454N	EA
C020A			Z17 -SN7454N	
C021	00001.000	222222-7425	NETWORK SN7425N	EA
0021A			Z31	
0022	00016.000	233869-0000	RES 2000.0 OHM .25W 5% AB -CB2025	EA
0022A			R1 THRU R16 AB -CB2025	
0024	REF	959183-9901	DIAGRAM,LOGIC DET.ASR TERMINAL CONTROL	EA
0026	00001.000	222222-7437	NETWORK SN7437N	EA
0026A			Z19	
0027	00001.000	222222-7164	NETWORK SN74164N TI--SN74164N	EA
0027A			Z6 TI--SN74164N	

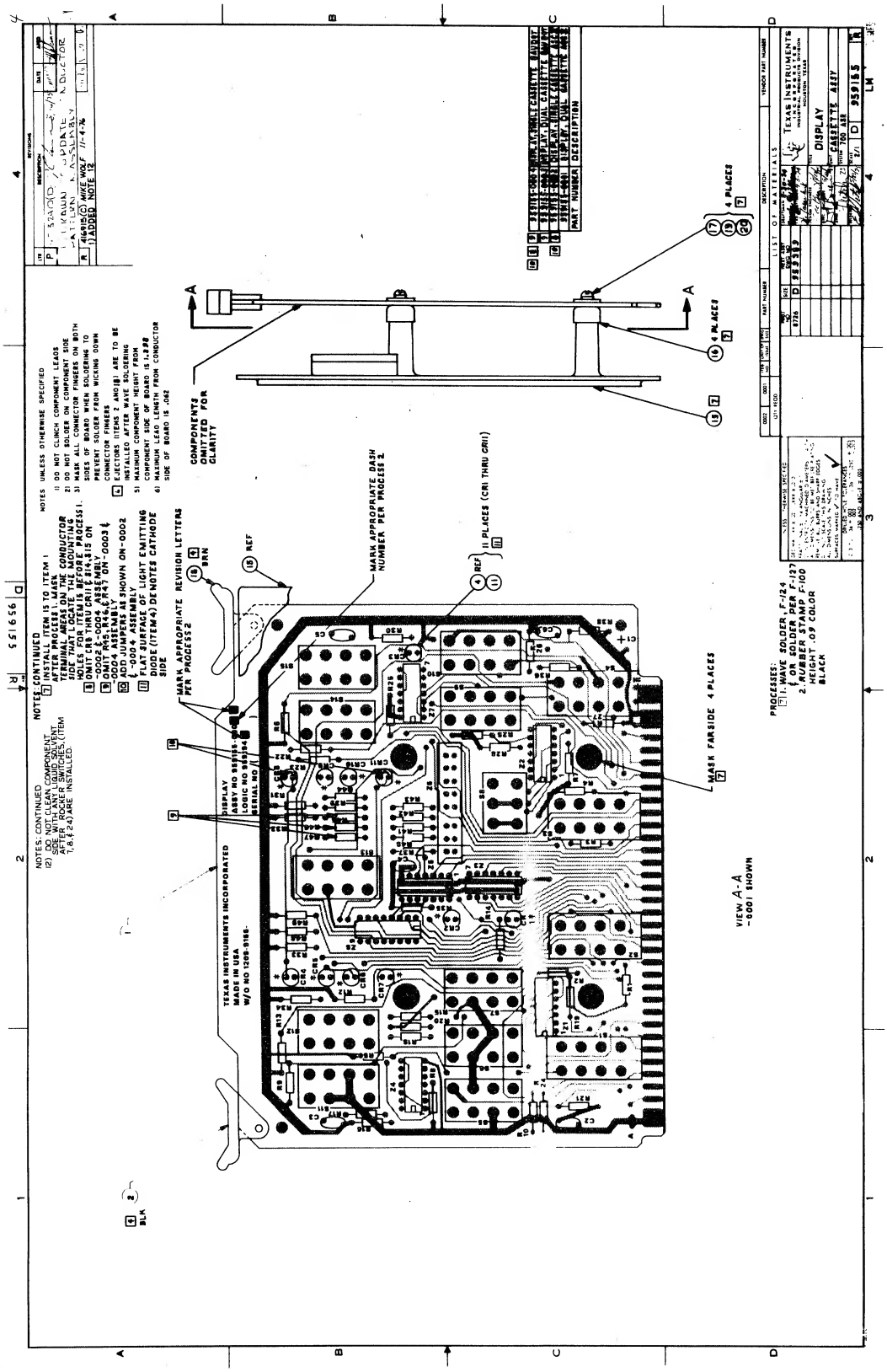

MARCH 11, 1977 L I S T O F M A T E R I A L

PART NUMBER	REV	DESCRIPTION.....
0959155-0001	R	DISPLAY,DUAL CASSETTE ASC II
0959155-0003	P	DISPLAY,DUAL CASSETTE BAUDOT

ITEM.	QUANTITY.	COMPONENT..	DESCRIPTION.....	UM
0001	00001.000	0959154-0001	PW BOARD,DISPLAY	EA
			1209-9154-000	
0002	00001.000	0533887-0003	EJECTOR,PCB,NON-LOCKING,BLACK	EA
			SCA - S--02 BLACK	
0003	00001.000	0959341-0001	DIODE ASSY,SLM-1012 LT-EMITTING	EA
			1209-9341-014	
0003A			Z6	
			1209-9341-014	
0004	00000.000	0539480-0001	OPTOELECTRONIC DEVICE-LSL-6L	EA
			OPC - -L-L6L	
0004A			CR1 THRU CR11 ITEM 4 MAY BE	
			OPC - -L-L6L	
0004B			USED AS AN ALTERNATE TO	
			OPC - -L-L6L	
0004C			ITEM 26	
			OPC - -L-L6L	
0004D			ITEMS 4 & 26 MAY NOT BE	
			OPC - -L-L6L	
0004E			MIXED ON THE SAME ASSY	
			OPC - -L-L6L	
0005	00015.000 for -0001	0972946-0047	RES FIX 180 OHM 5 % .25 W CARBON FILM	EA
			ROH - R-25	
0005	00012.000 for -0003	0972946-0047	RES FIX 180 OHM 5 % .25 W CARBON FILM	EA
			ROH - R-25	
0005A			R14,R30,R33,R34,R35,R39	
			ROH - R-25	
0005A			R14,R30,R33,R34,R35,R39	
			ROH - R-25	
0005B			THRU R43,R45,R46,R47,R37	
			ROH - R-25	
0005B			THRU R43,R45,R46,R47,R37	
			ROH - R-25	
0005C			R31	
			ROH - R-25	
0005C			R31	
			ROH - R-25	
0006	00031.000	0972946-0072	RES FIX 2.0K OHM 5 % .25 W CARBON FILM	EA
			ROH - R-25	
0006A			R1 R2 R3 R4,R6 THRU R10	
			ROH - R-25	
0006B			R15 THRU R29 R12 R13	
			ROH - R-25	
0006C			R36 R38 R48 R49 R50	
			ROH - R-25	
0007	00010.000	0959342-0002	SWITCH,ROCKER-DP-TT	EA
0007A			S5 THRU S7,S9 THRU S15	
0008	00004.000	0959342-0001	SWITCH,ROCKER-DP-TT	EA
0008A			S1 THRU S4	
0009	00002.000	0972946-0039	RES FIX 82.0 OHMS 5 % .25 W CARBON FILM	EA
			ROH - R-25	
0009A			R32,R44	
			ROH - R-25	
0010	00005.000	0222222-7405	NETWORK SN7405N	EA
0010A			Z1 Z3 Z4 Z5 Z7	
0011	00011.000	0972350-0087	SPACER,UNTHREADED 1/4" O.D I.D.171 NYL	EA
0012	00001.000	0972924-0011	CAP FIX TANT SOLID 68 MFD 10 % 15 VOLT	EA
			QPL - M3-003/1-2274	
0012A			C1	
			QPL - M3-003/1-2274	
0013	00005.000	0532736-0002	CAP FIX CERAMIC .02 MF 20/80% 25 VOLT	EA
			CRL - 2-DU60E203ZAC	
0013A			C2 THRU C6	
			CRL - 2-DU60E203ZAC	
0014	REF	0959194-9901	DIAGRAM,LOGIC DET-DISPLAY	EA
0015	00001.000	0959255-0003	PANEL,DISPLAY	EA
0016	00004.000	0772334-0001	FASTNER 4-40 ON-SERT	EA
			PAL - NR-40004	
0017	00004.000	0972988-0014	SCREW 4-40 X .312 PAN HEAD CRES	EA

PART NUMBER REV DESCRIPTION.....
0959155-0001 R DISPLAY,DUAL CASSETTE ASC II

ITEM.	QUANTITY.	COMPONENT..	DESCRIPTION.....	UM
0018	00001.000	0533887-0013	EJECTOR,PCB,NON-LOCKING,BROWN SCA - S--02 BROWN	EA
0019	00004.000	0411101-0057	LOCKWASHER # 4 EXTERNAL TOOTH CRES QPL - M-35335-57	EA
0020	00004.000	0411027-0804	REPLACED BY 416622-0011 QPL - M-15795-804	EA
0021	REF	0960985-9901	PROGRAM TEST,DISPLAY	EA
0022	00001.000	0222222-7403	NETWORK SN7403N	EA
0022A			Z2	
0023	00001.000	0222222-7165	NETWORK SN74165N	EA
0023A			Z8	
0024	00001.000	0959343-0001	SWITCH,ROCKER DP-DT	EA
0024A			S8	
0026	00011.000	0539480-0003	OPTOELECTRONIC DEVICE-TIL 220	EA
0026A			CR1 THRU CR11	
0026B			ITEM 4 MAY BE USED AS AN	
0026C			ALTERNATE TO ITEM 26	
0026D			ITEM 4 & 26 MAY NOT BE	
0026E			MIXED ON THE SAME ASSY	

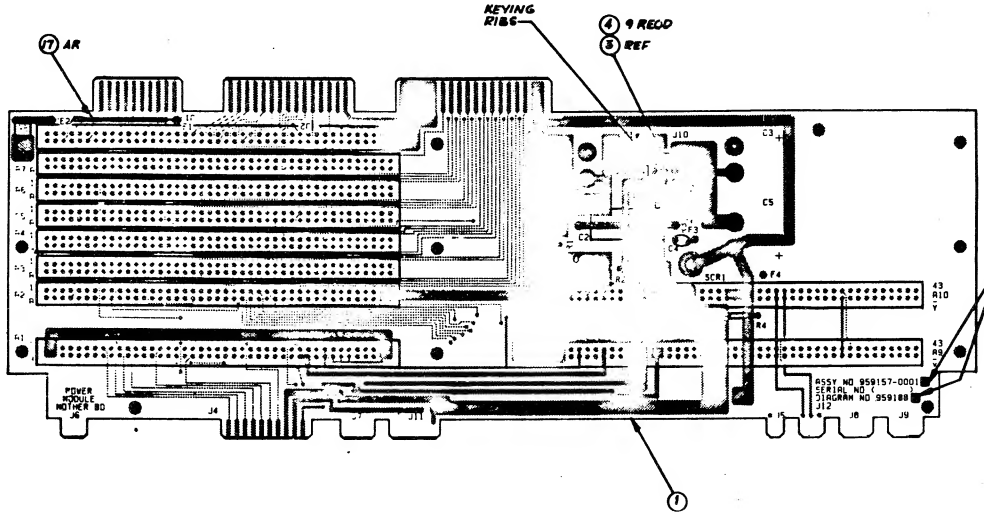

NOTES:
1. DO NOT CLINCH COMPONENT LEADS
2. DO NOT SOLDER ON COMPONENT SIDE
3. MASK ALL CONNECTOR FINGERS ON BOTH SIDES OF BOARD WHEN SOLDERING TO PREVENT SOLDER FROM WICKING DOWN CONNECTOR FINGERS MAXIMUM COMPONENT HEIGHT FROM COMPONENT SIDE OF BOARD IS .950
4. MAXIMUM LEAD LENGTH FROM CONDUCTOR SIDE OF BOARD IS .063
5. DO NOT INSTALL C2 & C4 UNTIL AFTER BOARD IS OMNITESTED
6. POWER MODULE MOTHER BOARDS, WHICH ARE BEING ASSEMBLED FOR INSTALLATION INTO POWER MODULE ASSY (PN959390) ON THE PRODUCTION LINE MAY BE BUILT WITH C2 (ITEM 8) & C4 (ITEM 12) LEFT OFF. THESE ASSEMBLIES WILL HAVE C2 & C4 INSTALLED DURING ASSEMBLY OF POWER MODULE ASSEMBLY

MARK APPROPRIATE REVISION LETTER PER REVISION LEVEL BLOCK

LTR	DESCRIPTION	DATE	APPD
E	372854 (C) N. Carroll 8/18/72 REVISED & REDRAWN WITH CHANGES		
F	372587(C) J. Pinney 10-23-72		
	UPDATED REVISION LEVEL BLOCK		
G	372651(B)		
	REVISED & REDRAWN WITH CHANGES		
H	386585 (F) J. Pinney 12-18-73		
I	IN NOTE 4, DIM .950 WAS .860		
J	391547(E) J. Pinney 1-23-74		
	UPDATED REV LEVEL BLOCK		
K	416905(C)		
	ADDED NOTE 6; PN ITEM 26 WAS 959212-9901		
L	CN426182	8-26-77	
	ADDED NOTE 7		
M	CN428017	9-09-77	
	ITEM 17 QTY WAS AR PN WAS 3[illegible]-D 5999 DESCRIPTION WAS WIRE HOOKUP B-18 AWG 19 STR WHITE J/O-HR803		

PROCESSES:
1. WAVE SOLDER, F-124 AND (OR) SOLDER PER F-127
2. RUBBER STAMP, F-100, HEIGHT .09, COLOR BLACK

QTY REQD	ITEM NO	CCCA DENT	PART OR IDENTIFYING NUMBER	NOMENCLATURE OR DESCRIPTION	PROCUREMENT SPECIFICATION

PARTS LIST

PRINTED WIRING BOARD FOR -0001 (959156-0001)
DIAGRAM SCHEMATIC FOR -0001 ASSEMBLY (959188-9901)
ASSEMBLY

UNLESS OTHERWISE SPECIFIED
- REMOVE ALL BURRS AND SHARP EDGES
- CONCENTRICITY MACHINED DIAMETERS .010 F.I.M.
- DIMENSIONS - PARTS AFTER BEING FINISH PROCESSING
- IDENTIFYING NUMBERS SHOWN IN PARENTHESES FOR REFERENCE ONLY
- INTERPRET DRAWING IN ACCORDANCE WITH MIL STD 100

UNLESS OTHERWISE SPECIFIED
- DIMENSIONS ARE IN INCHES
- TOLERANCES
ANGLES ±1
3 PLACE DECIMALS ±.010
2 PLACE DECIMALS ±.02

MATERIAL

959390 B1a
NEXT ASSY | USED ON
APPLICATION

DRN N. Carroll 8/18/72
ENGR
LD
APVD
CONTR NO
DESIGN AUTHORITY RELEASE

TEXAS INSTRUMENTS INCORPORATED Equipment Group Dallas Texas

POWER MODULE MOTHER BOARD

SIZE D | CODE IDENT NO 96214 | DRAWING NO 959157
SCALE 1/1 | SHEET

LM FILM:

OCTOBER 14, 1977 LIST OF MATERIAL

PART NUMBER	REV	DESCRIPTION
C959157-0001	M	POWER MODULE MOTHER BOARD

ITEM.	QUANTITY.	COMPONENT..	DESCRIPTION	UM
0001	00001.000	0959156-0001	PW BOARD,POWER MODULE MOTHER 1209-9156-000	EA
0002	00010.000	0244209-0001	CONNECTOR,MOTHER BOARD	EA
0002A			A1 THRU A10	
0003	00001.000	0539386-0010	CONNECTOR PLUG 9CIRCUIT AMP -480180-1	EA
0003A			J10 AMP -48018C-1	
0004	00009.000	0231553-0005	CONTACT PC SOLDER DIP AMP -60905-1	EA
0008	00001.000	0539482-0002	CAP 1200. MF 30V MAL -TCG122U030L1L3	EA
0008A			C2 MAL -TCG122U030L1L3	
0012	00001.000	0534348-0001	CAP FIX CERAMIC .10 MF 20/80 % 10V CRL - UKIC-104	EA
0012A			C4 CRL - UKIC-104	
0013	00002.000	0972947-0071	RES FIX 1.8K OHM 5% .5 W CARBON FILM ROH - R-50	EA
0013A			R2,R3 ROH - R-50	
0014	00001.000	0972947-0083	RES FIX 5.6K OHM 5% .5 W CARBON FILM ROH - R-50	EA
0014A			R1 ROH - R-50	
0015	00001.000	0972947-0045	RES FIX 150 OHM 5% .5 W CARBON FILM ROH - R-50	EA
0015A			R4 ROH - R-50	
0017	00001.000	0971564-0001	JUMPER 1210-1564-000	EA
0025	REF	0959188-9901	DIAGRAM,LOGIC DET-POWER MODULE,MOTHER	EA
0026	REF	C970631-9901	TEST PRCGRAM,PWR MODULE MOTHER BOARD	EA

NOTES:

1. MASK ALL CONNECTOR FINGERS ON BOTH SIDES OF BOARD WHEN SOLDERING TO PREVENT SOLDER FROM WICKING DOWN CONNECTOR FINGERS
2. MAXIMUM COMPONENT HEIGHT FROM COMPONENT SIDE OF BOARD IS .406
3. MAXIMUM LEAD LENGTH FROM CONDUCTOR SIDE OF BOARD IS .062

REVISIONS				
ZONE	LTR	DESCRIPTION	DATE	APPROVED
	C	372982 (C) 8/13/72 REDRAWN & REDRAWN WITH CHANGES	8/15/72	
	D	391534 (E) 7-23-74 UPDATED REV LEVEL BLOCK	7-26-74	

PROCESSES:

1. WAVE SOLDER, F-124 AND (OR) SOLDER PER F-127
2. RUBBER STAMP, F-100, HEIGHT .09, COLOR BLACK

WIRING DIAGRAM FOR -0001 ASSY (959189-9901)

ASSEMBLY

UNLESS OTHERWISE SPECIFIED: REMOVE ALL BURRS AND SHARP EDGES. CONCENTRICITY MACHINED DIAMETERS .010 FIR. DIMENSIONAL LIMITS APPLY BEFORE FINISH PROCESSING. IDENTIFYING NUMBERS SHOWN IN PARENTHESES FOR REFERENCE ONLY. INTERPRET DRAWING IN ACCORDANCE WITH MIL STD 100.

NEXT ASSY	USED ON
959389	8726

APPLICATION

UNLESS OTHERWISE SPECIFIED: DIMENSIONS ARE IN INCHES. TOLERANCES: ANGLES ±1, 3 PLACE DECIMALS ±.010, 2 PLACE DECIMALS ±.02

MATERIAL

QTY REQD	ITEM NO	CODE IDENT	PART OR IDENTIFYING NUMBER	NOMENCLATURE OR DESCRIPTION	PROCUREMENT SPECIFICATION
2 | 1					

PARTS LIST

DWN 8/13/72; CHK 8/15/72; ENGR 8/15/72; QA; APVD 8/15/72; CONTRACT 8/16/72; DESIGN ACTIVITY RELEASE 8/16/72

TEXAS INSTRUMENTS INCORPORATED, Equipment Group, Dallas Texas

CASSETTE MOTHER

SIZE	CODE IDENT NO	DRAWING NO
D	96214	959159

SCALE 1/1 REV D SHEET

LM

PART NUMBER	REV	DESCRIPTION
959159-0001	D	CASSETTE MOTHER

ITEM.	QUANTITY.	COMPONENT..	DESCRIPTION.	UM
0001	00001.000	959158-0001	PW BOARD,CASSETTE MOTHER BD. 1209-9158-000	EA
0002	00002.000	772278-0002	CONNECTOR,DBL RCW 15/30 MSR-MC15D/2-2	EA
0002A			XA8 XA9 MSR-MC15D/2-2	
0003	00007.000	959344-0001	CONNECTOR,PW-DBL RCW 36/72 - -	EA
0003A			XA1,XA2,XA3,XA4,XA5,XA6,XA7 - -	
C004	REF	959189-9901	DIAGRAM,WIRING INTERCONNECTING	EA

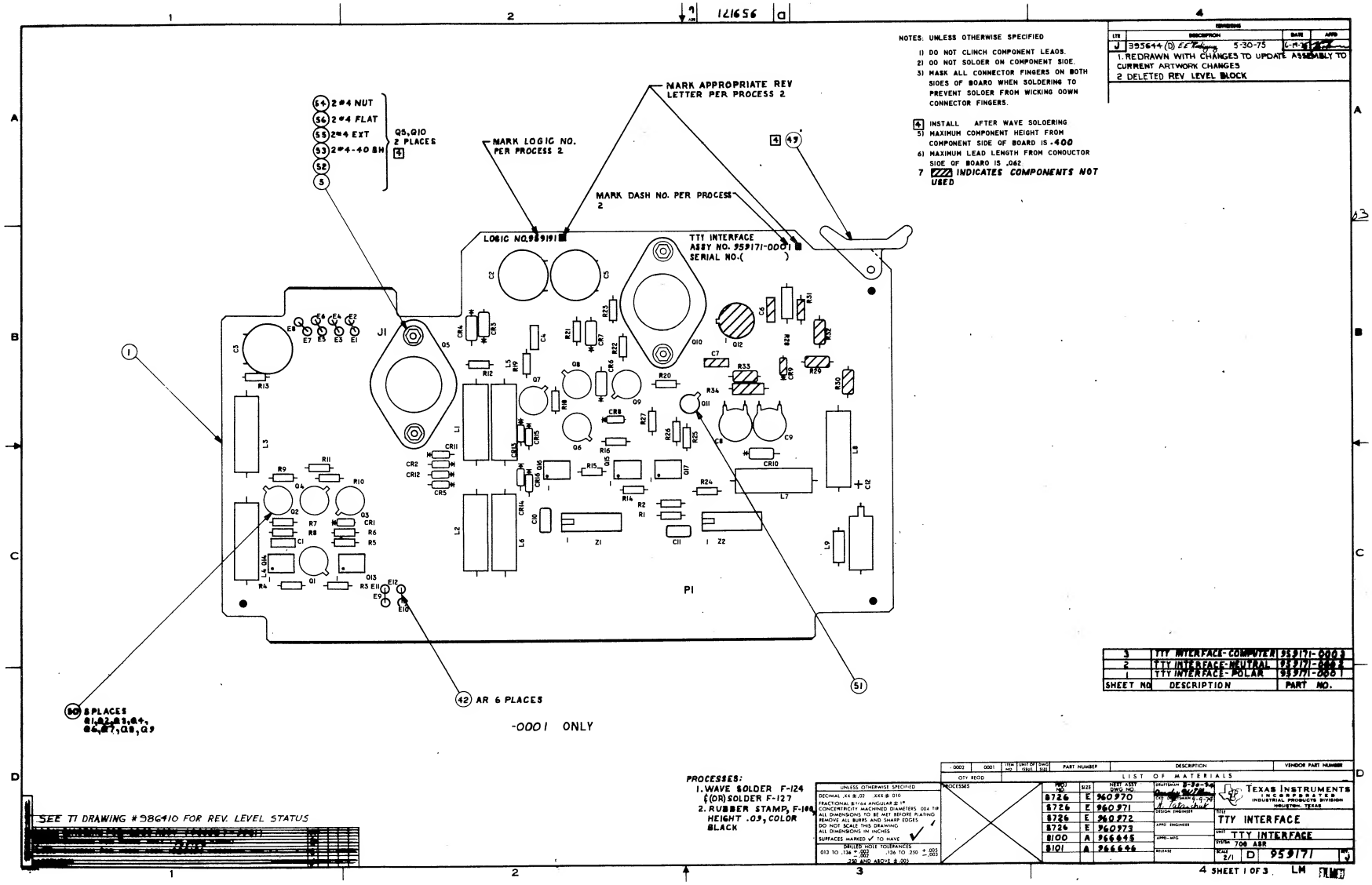

NOTES: UNLESS OTHERWISE SPECIFIED
1) DO NOT CLINCH COMPONENT LEADS.
2) DO NOT SOLDER ON COMPONENT SIDE.
3) MASK ALL CONNECTOR FINGERS ON BOTH SIDES OF BOARD WHEN SOLDERING TO PREVENT SOLDER FROM WICKING DOWN CONNECTOR FINGERS.
4 INSTALL AFTER WAVE SOLDERING
5) MAXIMUM COMPONENT HEIGHT FROM COMPONENT SIDE OF BOARD IS .400
6) MAXIMUM LEAD LENGTH FROM CONDUCTOR SIDE OF BOARD IS .062
7 INDICATES COMPONENTS NOT USED
REVISIONS
LTR DESCRIPTION DATE APPD
J 395644 (D) 5-30-75
1. REDRAWN WITH CHANGES TO UPDATE ASSEMBLY TO CURRENT ARTWORK CHANGES
2 DELETED REV LEVEL BLOCK
MARK APPROPRIATE REV LETTER PER PROCESS 2
MARK LOGIC NO. PER PROCESS 2
MARK DASH NO. PER PROCESS 2
LOGIC NO. 959191
TTY INTERFACE ASSY NO. 959171-0001 SERIAL NO.( )
54 2#4 NUT
56 2#4 FLAT
55 2#4 EXT
53 2#4-40 SH
52
5
Q5, Q10 2 PLACES 4
4 49
1
J1
P1
42 AR 6 PLACES
50 8 PLACES Q1, Q2, Q3, Q4, Q6, Q7, Q8, Q9
51
-0001 ONLY
3 TTY INTERFACE-COMPUTER 959171-0003
2 TTY INTERFACE-NEUTRAL 959171-0002
1 TTY INTERFACE-POLAR 959171-0001
SHEET NO DESCRIPTION PART NO.
PROCESSES:
1. WAVE SOLDER F-124 (OR) SOLDER F-127
2. RUBBER STAMP, F-100 HEIGHT .09, COLOR BLACK
SEE TI DRAWING #986410 FOR REV. LEVEL STATUS
LIST OF MATERIALS
PART NUMBER
DESCRIPTION
VENDOR PART NUMBER
PROCESSES
PROJ NO. SIZE NEXT ASSY DWG NO.
8726 E 960970
8726 E 960971
8726 E 960972
8726 E 960973
8100 A 966645
8101 A 966646
TEXAS INSTRUMENTS INCORPORATED INDUSTRIAL PRODUCTS DIVISION HOUSTON, TEXAS
TITLE TTY INTERFACE
UNIT TTY INTERFACE
SYSTEM 708 ASR
SCALE 2/1 D 959171 REV J
SHEET 1 OF 3 LM

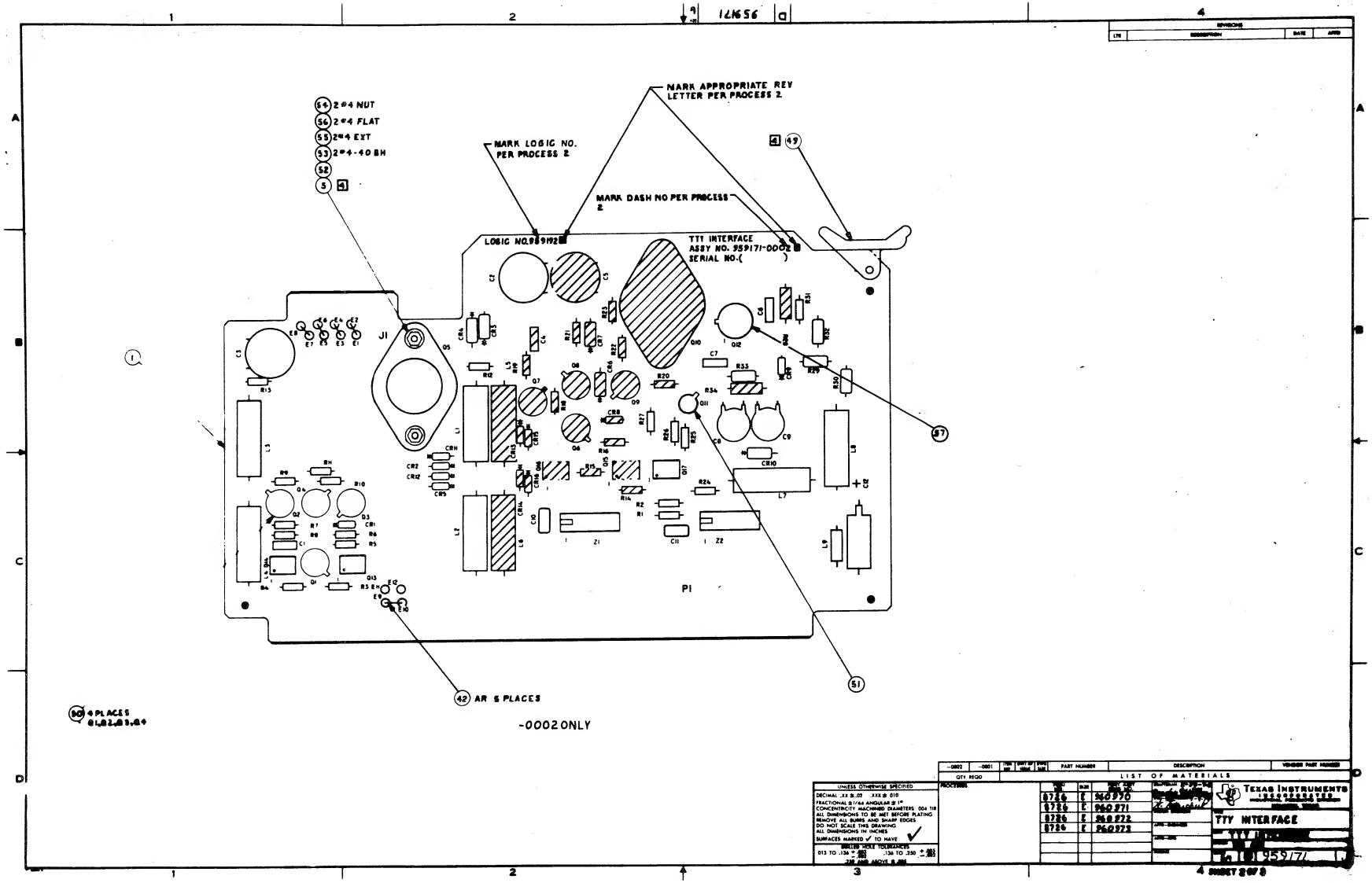
MARK APPROPRIATE REV LETTER PER PROCESS 2
MARK LOGIC NO. PER PROCESS 2
MARK DASH NO PER PROCESS 2
LOGIC NO.959192
TTY INTERFACE ASSY NO. 959171-0002 SERIAL NO.( )
54 2#4 NUT
56 2#4 FLAT
55 2#4 EXT
53 2#4-40 BH
52
5
49
57
51
42 AR 5 PLACES
50 4 PLACES
-0002 ONLY
J1
P1
LIST OF MATERIALS
TEXAS INSTRUMENTS INCORPORATED
TTY INTERFACE
959171
SHEET 2 OF 3

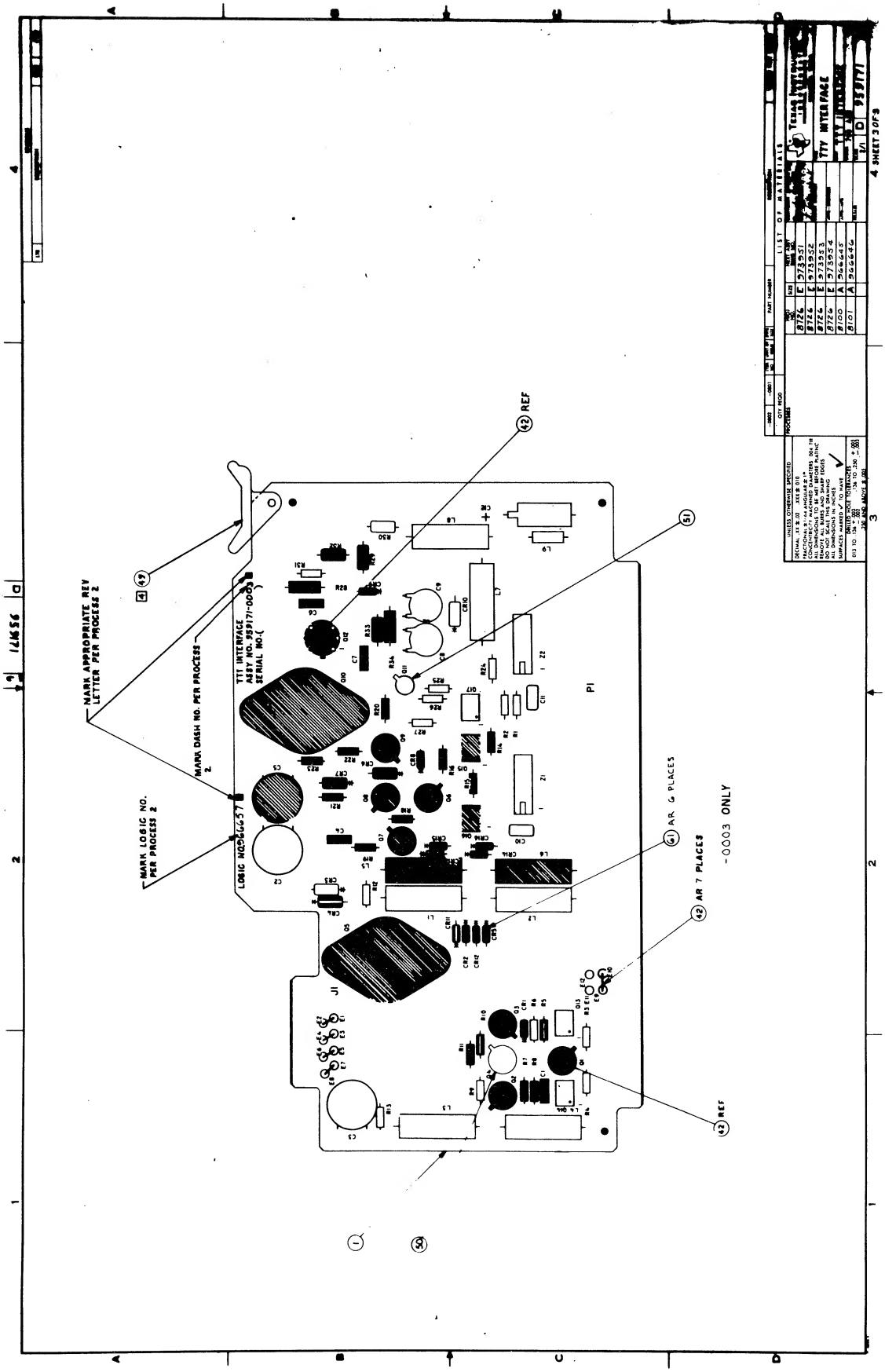
MARK APPROPRIATE REV LETTER PER PROCESS 2
MARK DASH NO. PER PROCESS 2
MARK LOGIC NO. PER PROCESS 2
TTI INTERFACE ASSY NO. 959171-0003 SERIAL NO.( )
LOGIC NO. 966657
42 REF
51
61 AR 6 PLACES
42 AR 7 PLACES
42 REF
-0003 ONLY
P1
J1
LIST OF MATERIALS
TTY INTERFACE
4 SHEET 3 OF 3

PART NUMBER	REV	DESCRIPTION.....
959171-0001	J	TTY INTERFACE-POLAR
959171-0002	J	TTY INTERFACE-NEUTRAL
959171-0003	J	TTY INTERFACE-COMPUTER

ITEM.	QUANTITY.	COMPONENT..	DESCRIPTION.....	
C001	00001.000	959170-0001	PW BCARD,TTY INTERFACE	EA
			1209-9170-000	
C002	00001.000	222222-7416	NETWORK SN7416N	EA
			-SN7416N	
C002A			Z1	
			-SN7416N	
C003	00001.000	222222-7413	NETWORK SN7413N	EA
C003A			Z2	
C004	00005.000	232149-0955	ISOLATOR XL111 OPTICALLY COUPLED	EA
			TI--L111	
C004A			Q13 THRU Q17	
			TI--L111	
C005	00002.000	236093-0004	XST NPN SILICON PWR 3.5AMP HIGH VOLTAGE	EA
			DLC-DTS423	
C005A			Q5,Q10	
			DLC-DTS423	
C006	00004.000	236087-0025	TRANSISTOR 2N3439	EA
			530-710-0002 04713	
C006	00001.000	235997-0000	XST 2N697	EA
			- 3-000	
C006A			Q2,Q4,Q7,Q8	
			530-710-0002 04713	
C006A			Q4	
			- 3-000	
C007	00002.000	534137-0001	XST 2N5416 PNP SILICON HIGH VOLTAGE	EA
			RCA-2N5416	
C007A			Q3 Q9	
			RCA-2N5416	
C008	00004.000	231768-0684	DIODE 1N5384B 5W DIFFUSED ZENER 5.%	EA
			MOT-1N5384B	
C008A			CR3,CR4,CR6,CR7	
			MOT-1N5384B	
C009	00008.000	539468-0007	DIODE, 1N4007	EA
			TI -1N4007	
C009A			CR2 CR5,CR11 THRU CR16	
			TI -1N4007	
C010	00001.000	231768-0545	DIODE 1N5338B ZENER	EA
			MOT-1N5338B	
C010	00001.000	231768-0545	DIODE 1N5338B ZENER	EA
			MOT-1N5338B	
C010A			CR10	
			MOT-1N5338B	
C010A			CR10	
			MOT-1N5338B	
C011	00002.000	231784-0001	DIODE MPD300 3 PELLET SILICON MULTI	EA
			GE -MPD300	
C011A			CR1,CR8	
			GE -MPD300	
C012	00001.000	972924-0011	CAP FIX TANT SOLID 68 MFD 10 % 15 VOLT	EA
			QPL-M39003/1-2274	
C012A			C12	
			QPL-M39003/1-2274	
C013	00002.000	532736-0002	CAP FIX CERAMIC .02 MF 20/80% 25 VOLT	EA
			CRL- 2DDU60E203ZAC	
C013A			C10,C11	
			CRL- 2DDU60E203ZAC	
C014	00003.000	410529-0502	CAP FIX CERAMIC .005 MF GMV 1 KV	EA
			CRL- DD-502	
C014A			C2,C3,C5	
			CRL- DD-502	
C015	00002.000	410529-0102	CAP FIX CERAMIC .001 MF 10% 1 KV	EA
			CRL- DD-102	
C015A			C8,C9	
			CRL- DD-102	
C016	00008.000	538446-0009	COIL RF 100 UH 2.5 OHM 245 MA LT10K189	EA
			QPL- MS75103-09	
C016A			L1 THRU L8	
			QPL- MS75103-09	
C017	00002.000	972929-0397	CAP FIX CERAMIC .001 UF 10% 200V	EA
			QPL-M39014/01-1397	
C017A			C1,C4	
			QPL-M39014/01-1397	
C018	00004.000	972946-0049	RES FIX 220 OHM 5 % .25 W CARBON FILM	EA
			ROH- R-25	
C018A			R3,R4,R14,R15	
			ROH- R-25	

PART NUMBER	REV	DESCRIPTION
959171-0001	J	TTY INTERFACE-POLAR
959171-0002	J	TTY INTERFACE-NEUTRAL
959171-0003	J	TTY INTERFACE-COMPUTER

ITEM.	QUANTITY.	COMPONENT..	DESCRIPTION	
C019	00001.000	538433-0001	COIL RF 5.60 UH .13 OHM 885 MA LT10K158	EA
			QPL- MS90542-14	
C019A			L9	
			QPL- MS90542-14	
C020	00004.000	972946-0065	RES FIX 1.0K OHM 5 % .25 W CARBON FILM	EA
			RCH- R-25	
C020A			R2,R24,R25,R26	
			RCH- R-25	
C021	00003.000	972946-0041	RES FIX 100 OHM 5 % .25 W CARBON FILM	EA
			RCH- R-25	
C021A			R12,R13,R23	
			RCH- R-25	
C022	00001.000	234225-0000	RES 15000. OHM .25W 5.	EA
			AB -CB1535	
C022A			R5	
			AB -CB1535	
C023	00001.000	972946-0109	RES FIX 68 K OHM 5 % .25 W CARBON FILM	EA
			RCH- R-25	
C023A			R6	
			RCH- R-25	
C024	00002.000	972946-0141	RES FIX 1.5M OHM 5 % .25 W CARBON FILM	EA
			RCH- R-25	
C024A			R7,R18	
			QPL-RC07G335JS	
C025	00002.000	972946-0121	RES FIX 220K OHM 5 % .25 W CARBON FILM	EA
			RCH- R-25	
C025A			R8,R19	
			RCH- R-25	
C026	00002.000	972946-0113	RES FIX 100K OHM 5 % .25 W CARBON FILM	EA
			RCH- R-25	
C026A			R9,R21	
			RCH- R-25	
C027	00004.000	972946-0089	RES FIX 10 K OHM 5 % .25 W CARBON FILM	EA
			RCH- R-25	
C027A			R10,R20,R27,R1	
			RCH- R-25	
C028	00002.000	972946-0061	RES FIX 680 OHM 5 % .25 W CARBON FILM	EA
			RCH- R-25	
C028A			R11,R22	
			RCH- R-25	
C030	00001.000	539370-0335	RES FIX FILM 301 OHM 1% .25 WATT	EA
			COR- NA55	
C030A			R30	
			COR- NA55	
C031	00001.000	539370-0296	RES FIX FILM 118 OHM 1% .25 WATT	EA
			COR- NA55	
C031A			R32	
			COR- NA55	
C032	00001.000	539370-0352	RES FIX FILM 453 OHM 1% .25 WATT	EA
			COR- NA55	
C032A			R29	
			COR- NA55	
0033	00001.000	539370-0410	RES FIX FILM 1.82K OHM 1% .25 WATT	EA
			COR- NA55	
C033A			R33	
			COR- NA55	
C034	00001.000	972946-0075	RES FIX 2.7K OHM 5 % .25 W CARBON FILM	EA
			RCH- R-25	
C034	00001.000	972946-0048	RES FIX 200 OHM 5 % .25 W CARBON FILM	EA
			RCH- R-25	
C034A			R31	
			RCH- R-25	
C034A			R31	
			RCH- R-25	
0035	00001.000	231784-0000	DIODE- 2 PELLET, SILICON,MULTI	EA
			GE -MPD200	
C035A			CR9	
			GE -MPD200	
C036	00001.000	236079-0000	TRANSISTOR 2N2639	EA
			414-873-0001 01295	
C036A			Q12	
			414-873-0001 01295	
0038	00002.000	972965-0020	CAP FIX CERAMIC .047 MF 10% 100V	EA
			QPL- CK06BX473K	
C038A			C7,C6	
			QPL- CK06BX473K	
C039	00001.000	972947-0041	RES FIX 100 OHM 5% .5 W CARBON FILM	EA
			RCH- R-50	
C039A			R28	
			RCH- R-50	

PART NUMBER	REV	DESCRIPTION
959171-0001	J	TTY INTERFACE-POLAR
959171-0002	J	TTY INTERFACE-NEUTRAL
959171-0003	J	TTY INTERFACE-COMPUTER

ITEM.	QUANTITY.	COMPONENT..	DESCRIPTION	
0040	00001.000	972948-0002	TRANSISTOR,2N2222A NPN GEN PURP SW TO-18	EA
			TI - 2N2222A	
C04CA			Q11	
			TI - 2N2222A	
C041	00001.000	972946-0091	RES FIX 12 K OHM 5 % .25 W CARBON FILM	EA
			RCH- R-25	
C041A			R16	
			ROH- R-25	
C042	AR	411400-0022	WIRE 22AWG ELETRO-TIN-PLATED,COPPER	FT
C049	00001.000	231802-0008	EJECTOR GRY 8-200	EA
			SCA-8-200	
C049	00001.000	231802-0007	EJECTOR VIO 8-200	EA
			SCA-8-200	
C050	00008.000	232583-0008	PAD XST MTG TO-5 WHT	EA
			THR-7717-4N	
C051	00001.000	185113-0001	SPACER XST TO-18 CASE	EA
			* -	
C052	00002.000	232582-1000	PAD INSULATING TO-3 MICA	EA
			- 3-000	
C053	00004.000	418293-0015	SCREW 4-40 UNC-2A X .375 PAN HEAD CRES	EA
			QPL- MS1957-15	
C054	00004.000	411115-0044	NUT,4-40 HEXAGON CRES STEEL	EA
			MS -35649-244	
C055	00004.000	411101-0057	LOCKWASHER # 4 EXTERNAL TOOTH CRES	EA
			QPL- MS35335-57	
C056	00004.000	411027-0804	WASHER .125 X .312 X .032 FLAT CRES	EA
			QPL- MS15795-804	
C057	00001.000	232583-0005	PAD INTEGRATED CKT.TO-5 8 LEADS .350 DIA	EA
			THR-7717-107-N-WHT	
C060	REF	959191-9901	DIAGRAM,LOGIC DET-TTY INTERFACE-POLAR	EA
C060	REF	959192-9901	DIAGRAM,LOG DET-TTY INTERFACE-NEUTRAL	EA
C060	REF	966657-9901	DIAGRAM,LOG DET-TTY INTERFACE COMPUTER	EA
C061	AR	417836-0005	WIRE HOOKUP 8-24 AWG SOLID WHITE	FT
			JUD- HH0110	
C061	00001.000	971426-0001	SELECTED TRANSISTER-2N5416	EA
			1210-1426-000	
C061A			Q1	
			1210-1426-000	
C062	REF	959214-9902	PROGRAM TEST,TTY INTERFACE-NEUTRAL	EA

NOTES UNLESS OTHERWISE SPECIFIED

1) DO NOT CLINCH COMPONENT LEADS
2) DO NOT SOLDER ON COMPONENT SIDE
3) MASK ALL CONNECTOR FINGERS ON BOTH SIDES OF BOARD WHEN SOLDERING TO PREVENT SOLDER FROM WICKING DOWN CONNECTOR FINGERS
4) EJECTORS (ITEMS 2 AND 4) ARE TO BE INSTALLED AFTER WAVE SOLDERING
5) MAXIMUM COMPONENT HEIGHT FROM COMPONENT SIDE OF BOARD IS .375
6) MAXIMUM LEAD LENGTH FROM CONDUCTOR SIDE OF BOARD IS .062

REVISIONS			
LTR	DESCRIPTION	DATE	APPD
D	376184(C) [illegible] 8-23-72 REDRAWN W/CHG'S.	7/8/72	[illegible]
E	370666 (B) [illegible] 10/17/72 1. UPDATED REV LEVEL BLOCK	10/17/72	[illegible]
F	391559 (E) 7-25-74 [illegible] UPDATED REVISION LEVEL BLOCK ZONE D-1	[illegible]	[illegible]
G	396700 (D) Andy Wilborn 8-14-74 ITEM 5 P/N WAS 230906-0000 UPDATED REVISION LEVEL BLOCK	[illegible]	[illegible]
H	395443 (C) 11-11-74 [illegible] 1. QTY OF ITEM 12 WAS 0 UPDATED REVISION LEVEL BLOCK.	15-11-74	[illegible]

03

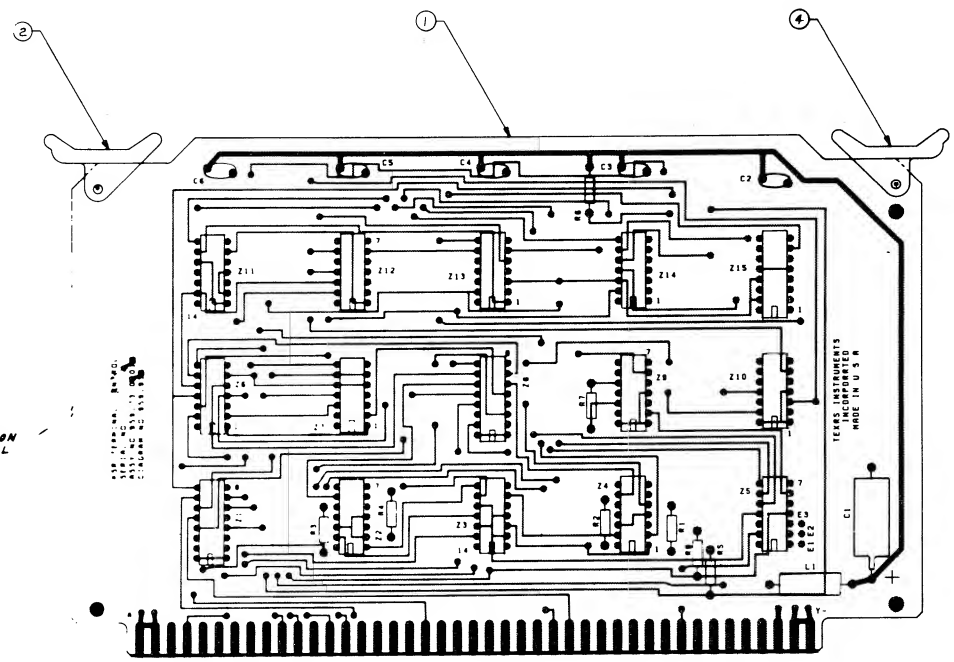

MARK APPROPRIATE REVISION LETTER PER REVISION LEVEL BLOCK

-0002	-0001	ITEM NO	UNIT OF ISSUE	DWG SIZE	PART NUMBER	DESCRIPTION	VENDOR PART NUMBER
[illegible]							

LIST OF MATERIALS

PROCESSES	PROJ NO	SIZE	NEXT ASSY DWG NO
1 WAVE SOLDER, F-124	8726	E	960371
2 RUBBER STAMP, F-100, HEIGHT .09, COLOR BLACK.	8726	E	960373

UNLESS OTHERWISE SPECIFIED
DECIMAL XX ± .02 XXX ± .010
FRACTIONAL ± 1/64 ANGULAR ± 1°
CONCENTRICITY MACHINED DIAMETERS .004 TIR
ALL DIMENSIONS TO BE MET BEFORE PLATING
REMOVE ALL BURRS AND SHARP EDGES
DO NOT SCALE THIS DRAWING
ALL DIMENSIONS IN INCHES
SURFACES MARKED ✓ TO HAVE ✓
DRILLED HOLE TOLERANCES
.013 TO .136 ± .003 .136 TO .250 ± .005 .250 AND ABOVE ± .005

TEXAS INSTRUMENTS INCORPORATED INDUSTRIAL PRODUCTS DIVISION HOUSTON TEXAS

TITLE KSR TERMINAL CONTROL
UNIT TERMINAL ASSY
SYSTEM 700 ASR
SCALE 2/1 D 959173 REV H

PRINTED WIRING BOARD (959172-0001)
LOG. DIAGRAM FOR 700 ASSY [illegible] 990
ASSEMBLY

LM

PART NUMBER	REV	DESCRIPTION
959173-0001	H	BOARD ASSY,TERMINAL CONTROL-KSR

ITEM.	QUANTITY.	COMPONENT..	DESCRIPTION	UM
0001	00001.000	959172-0001	PW BOARD,KSR TERMINAL CONTROL 1209-9172-000	EA
0002	00001.000	2318C2-0009	EJECTOR WHT 8-200 - 0-000	EA
0003	00008.000	233869-0000	RES 2000.0 OHM .25W 5. AB -CB2025	EA
0003A			R1 THRU R8 AB -CB2025	
0004	00001.000	2318C2-0004	EJECTOR YEL 8-200 SCA-8-200	EA
0005	00001.000	230855-0001	CAP 68.000 MF 15V 10% CASE SIZE C MIL-CS13BD686K	EA
0005A			C1 MIL-CS13BD686K	
0006	00005.000	230561-0000	CAP .02000 MF 25V 80/-20 % ERI-5835Y5U203Z	EA
0006A			C2 THRU C6 ERI-5835Y5U203Z	
0009	00001.000	418C93-0010	COIL 5.60 UH .13 OHMS 10% MIL-MS90542-14	EA
0009A			L1 MIL-MS90542-14	
0011	00002.000	222222-7400	NETWORK SN7400N - 3-000	EA
0011A			Z6 Z14 - 3-000	
0012	00001.000	222222-7410	NETWORK SN7410N - 3-000	EA
0012A			Z7 - 3-000	
0015	00004.000	222222-7474	NETWORK SN7474N - 3-000	EA
0015A			Z2 Z4 Z9 Z10 - 3-000	
0016	00001.000	222222-7166	NETWORK SN74166N	EA
0016A			Z15	
0017	00002.000	222222-7174	NETWORK SN74174N	EA
0017A			Z1 Z8	
0018	00003.000	222222-7408	NETWORK-SN7408N	EA
0018A			Z3 Z5 Z11	
0019	00001.000	222222-7427	NETWORK SN7427N TI--SN7427N	EA
0019A			Z12 TI--SN7427N	
0024	REF	959193-0901	DIAGRAM,LOGIC,DET.KSR TERM.CONTROL	EA
0026	00001.000	222222-7404	NETWORK SN7404N	EA
0026A			Z13	

080096 | a

REVISIONS CONT'D

LTR	DESCRIPTION	DATE	APPD
U	392402 (D) R. Nelson 2-27-75. CHGS -0001 & -0002: 1) ADDED CR31 & CR32 2) DELETED C24 3) LM: ADDED ITEM 78 & 78A 4) LM: ITEM 39 QTY WAS 16 5) LM: ITEM 39A DELETED C24 6) UPDATED REV LEVEL BLOCK	17 MAR 75	
V	403409 (B) E.E. 4-10-75. 1) ITEM 78 P/N 231692-0001 WAS 231685-0001 UPDATE REVISION LEVEL BLOCK	4-12-75	
W	ITEM 41 WAS 230658-0001		

NOTES: UNLESS OTHERWISE SPECIFIED

1. DO NOT CLINCH COMPONENT LEADS
2. MASK ALL CONNECTOR FINGERS ON BOTH SIDES OF BOARD WHEN SOLDERING TO PREVENT SOLDER FROM WICKING DOWN CONNECTOR FINGERS
3. MAXIMUM COMPONENT HEIGHT FROM COMPONENT SIDE OF BOARD IS .480
4. MAXIMUM LEAD LENGTH FROM CONDUCTOR SIDE OF BOARD IS .075
5. INSTALL AFTER FLOW SOLDER
6. ~~R17 INSTALLED @ UNIT TEST, MASK HOLES BEFORE PROCESS 1.~~
7. ON -0002 ASSY REMOVE -0001 FROM BOARD AND INK IN -0002. REMOVE 960082 FROM BOARD AND INK IN 986357.

PART NO.	DESCRIPTION
960080-0002	CASSETTE XPORT PWB ASSY (LED)
960080-0001	CASSETTE XPORT PWB ASSY (LAMPS)
	P/N SCHEDULE

REVISIONS

LTR	DESCRIPTION	DATE	APPD
A	372918 (D) R. Cambi 7-18-72. ITEM 8 WAS P/N 233354-0000, RES. 47 OHMS .25 WATT.		
	FORMAL RELEASE		
B	376661 (B) 12-29-72. 1) IT. 6 WAS 233713-0000	1-2-73	
C	381096 (B) 2-7-73. CHG IT. 9 WAS P/N 233292-0000		
D	381211 (B) 3-21-73. 1) ITEM 5 P/N WAS 233330-0000 2) UPDATED REV LEVEL BLOCK		
E	381165 (E) 3-23-73. 1) ADDED ITEM 75 ; ADDED R18 TO F/D 2) MOVED Q1 3) UPDATED REV LEVEL BLOCK		
F	378946 (C) 5-25-73. 1. ITEM 6 P/N WAS 233875-000 2. UPDATED REV LEVEL BLOCK		
G	386498 (B) 10-17-73. LM CHG, IT.24 QTY WAS 13, IT24A DELETED R17, IT.23, QTY WAS 1, ADDED TO IT23A, R17. UPDATED REV LEVEL BLOCK		
H	386495 (C) 11-23-73. ADDED IT. 76 & 76A TO LM. ADDED C14 ZONE C1, & C18 ZONE B1. ADDED IT. 70 TO VIEW ZONE A1. IT. 71 ZONE A1 WAS LOCATED WITH SCREW HEAD. UPDATED REV. LEVEL BLOCK.	11/26/73	
J	386151 (B) 2-1-74. ADDED NOTE 6; IT. 29A WAS R19, R25; QTY IT. 32 WAS 3; IT. 32A WAS R24 INCLUDED; QTY IT. 23 WAS 2; IT. 23A WAS R17; ADDED IT. 77, 77A, 7B & 78A	2-5-74	
K	388725 (C) 2-13-74. CHG: NOTE 4 SAME AS LEAD LENGTH WAS .062 UPDATED REV LEVEL BLOCK	2-15-74	
L	386963 D 3-6-74. 1. ADDED ITEMS 79, 80, AND 81 2. ITEM 74 Q'TY WAS 2. BALLOON CALLOUT 80 WAS 74, CALLOUT 81 WAS 74, CALLOUT 82 WAS 74.	3/25/74	
M	392401 (C) 4-3-74. 1) NOTE 6 WAS DELETED 2) ON LM IT 78 & 78A DELETED, QTY WAS 1, P/N 399999-9702 3) ON LM IT. 6 P/N WAS 233725-0000, RES 330 Ω 4) ON LM QTY IT 24 WAS 12 5) ON LM ADDED R17 TO IT 24B	4/4/74	
N	396764 (B) 6-7-74. 1) QTY ITEM 48 WAS 28. 2) ADDED CR33 AND CR34 TO ITEM 48A AND TO F/D ZONE B2.	6/18/74	
P	396658 (D) 6-26-74. 1.) IT. 73 P/N WAS 232144-1000 UPDATED REVISION LEVEL BLOCK	6/26/74	
R	391539 (E) 7-24-74. UPDATED REVISION LEVEL BLOCK	7/31/74	
S	403547 (C) 12-10-74. 1) DELETED IT 2 P/N WAS 960410-0001 QTY WAS 2. 2) CHG P/N IT. 69 WAS 235054-0014 3) DELETED IT 2 FROM F/D LEFT SIDE VIEW WAS: 4) UPDATE TOP VIEW TO COINCIDE WITH SIDE VIEW 5) UPDATED REVISION LEVEL BLOCK.	12/4/74	
T	396549 (B) 1-13-75. ADDED: 1) NOTE 7 2) P/N SCHEDULE. 3) -0002 LM UPDATE REVISION LEVEL BLOCK.	1/17/75	

REV CONT'D ZONE A-2

REVISION LEVEL																					
TEST PROGRAM (985877-9901) FOR -0002 ASSY																	-	-	-	*	A	A
TEST PROGRAM (985873-9901) FOR -0001 ASSY																	-	-	-	*	-	-
LOGIC DIAGRAM FOR -0002 ASSY (986357-9901)																	-	-	-	-	A	A
TEST PROGRAM (962321-9901) FOR -0001 ASSY	*	*	*	*	*	*	F	F	F	F	F	F	F	F	F	-	-	-	-	-	-
PRINTED WIRING BOARD (960081-9901)	*	A	A	A	A	A	A	B	B	B	C	C	C	D	E	E	F	F	F	F	F
LOGIC DIAGRAM FOR -0001 ASSEMBLY (960082-9901)	*	A	B	C	C	D	E	F	G	H	J	K	K	K	L	M	M	N	N	P	R
ASSEMBLY	*	A	B	C	D	E	F	F	G	H	J	K	L	M	N	P	R	S	T	U	V

UNLESS OTHERWISE SPECIFIED: DECIMAL XX .02 XXX .010; FRACTIONAL 1/64; ANGULAR 1°; CONCENTRICITY MACHINED DIAMETERS .006 TIR; ALL DIMENSIONS TO BE MET BEFORE PLATING; REMOVE ALL BURRS AND SHARP EDGES; DO NOT SCALE THIS DRAWING; ALL DIMENSIONS IN INCHES; SURFACES MARKED ✓ TO HAVE ✓

PROCESSES:
1) WAVE SOLDER F-124 AND (OR) SOLDER PER F-127
2) RUBBER STAMP, F-100, HEIGHT .09, COLOR BLACK

LIST OF MATERIALS

NEXT ASSY 8726 | SIZE D | 960331

TEXAS INSTRUMENTS INCORPORATED — INDUSTRIAL PRODUCTS DIVISION — HOUSTON, TEXAS

CASSETTE TRANSPORT, PWB ASSY — CASSETTE TRANSPORT 700 ASR

D 960080 W

LM

PART NUMBER	REV	DESCRIPTION.....
960080-0001	W	CASSETTE TRANSPORT,PWB ASSY (LAMPS)

ITEM.	QUANTITY.	COMPONENT..	DESCRIPTION.....	UM
0001	00001.000	960081-0001	PWB,CASSETTE TRANSPORT 1209-0081-000	EA
0005	00002.000	972947-0003	RES FIX 2.7 OHM 5 % .5 W CARBON FILM ROH- R-50	EA
0005A			R29,R34 ROH- R-50	
0006	00002.000	972947-0053	RES FIX 330 OHM 5% .5 W CARBON FILM ROH- R-50	EA
0006A			R88 R89 ROH- R-50	
0008	00002.000	233446-0000	RES 100.00 OHM 2. W 5. AB -HB1015	EA
0008A			R58,R59 AB -HB1015	
0009	00002.000	972946-0003	RES FIX 2.7 OHM 5 % .25 W.CARBON FILM ROH- R-25	EA
0009A			R42,R44 ROH- R-25	
0010	00001.000	972946-0049	RES FIX 220 OHM 5 % .25 W CARBON FILM ROH- R-25	EA
0010A			R85 ROH- R-25	
0011	00001.000	539370-0289	RES FIX FILM 100 OHM 1% .25 WATT COR- NA55	EA
0011A			R52 COR- NA55	
0013	00002.000	972946-0063	RES FIX 820 OHM 5 % .25 W CARBON FILM ROH- R-25	EA
0013A			R9 R10 ROH- R-25	
0014	00009.000	972946-0065	RES FIX 1.0K OHM 5 % .25 W CARBON FILM ROH- R-25	EA
0014A			R6,R13,R55,R75,R77,R82,R83, ROH- R-25	
0014B			R86,R87 ROH- R-25	
0015	00009.000	972946-0067	RES FIX 1.2K OHM 5 % .25 W CARBON FILM ROH- R-25	EA
0015A			R7,R8,R32,R56 R62 R63 R61 R66 ROH- R-25	
0015B			R67 ROH- R-25	
0016	00004.000	972946-0072	RES FIX 2.0K OHM 5 % .25 W CARBON FILM ROH- R-25	EA
0016A			R79,R80,R81,R23 ROH- R-25	
0018	00011.000	972946-0076	RES FIX 3.0K OHM 5 % .25 W CARBON FILM ROH- R-25	EA
0018A			R11 R15 R30 R35 R38 R57 R60 ROH- R-25	
0018B			R72 R73 R90 R91 ROH- R-25	
0019	00005.000	972946-0089	RES FIX 10 K OHM 5 % .25 W CARBON FILM ROH- R-25	EA
0019A			R14 R46 R47 R64 R65 ROH- R-25	
0020	00003.000	539370-0481	RES FIX FILM 10.0K OHM 1% .25 WATT COR-NA55D-100PPM/C	EA
0020A			R53 R69 R70 COR-NA55D-100PPM/C	
0022	00001.000	972946-0081	RES FIX 4.7K OHM 5 % .25 W CARBON FILM ROH- R-25	EA
0022A			R54 ROH- R-25	
0023	00001.000	972946-0095	RES FIX 18 K OHM 5 % .25 W CARBON FILM ROH- R-25	EA
0023A			R22 ROH- R-25	
0024	00013.000	972946-0097	RES FIX 22 K OHM 5 % .25 W CARBON FILM ROH- R-25	EA
0024A			R2 R5 R12 R27 R28 R40 R41 ROH- R-25	
0024B			R48 R49 R84 R33 R37 R17 ROH- R-25	
0025	00001.000	972946-0122	RES FIX 240K OHM 5 % .25 W CARBON FILM ROH- R-25	EA
0025A			R39 ROH- R-25	
0026	00002.000	539370-0539	RES FIX FILM 40.2K OHM 1% .25 WATT COR- NA55	EA

PART NUMBER	REV	DESCRIPTION
960080-0001	W	CASSETTE TRANSPORT,PWB ASSY (LAMPS)

ITEM.	QUANTITY.	COMPONENT..	DESCRIPTION	UM
0026A			R68 R78	
			COR- NA55	
0027	00003.000	972946-0101	RES FIX 33 K OHM 5 % .25 W CARBON FILM	EA
			ROH- R-25	
0027A			R16 R31 R36	
			ROH- R-25	
0028	00002.000	972946-0105	RES FIX 47 K OHM 5 % .25 W CARBON FILM	EA
			ROH- R-25	
0028A			R74 R76	
			ROH- R-25	
0029	00002.000	972946-0110	RES FIX 75 K OHM 5 % .25 W CARBON FILM	EA
			ROH- R-25	
0029A			R19 R24	
			ROH- R-25	
0030	00001.000	972946-0141	RES FIX 1.5M OHM 5 % .25 W CARBON FILM	EA
			ROH- R-25	
0030A			R1	
			ROH- R-25	
0031	00001.000	972946-0116	RES FIX 130K OHM 5 % .25 W CARBON FILM	EA
			ROH- R-25	
0031A			R21	
			ROH- R-25	
0032	00002.000	972946-0117	RES FIX 150K OHM 5 % .25 W CARBON FILM	EA
			ROH- R-25	
0032A			R43 R45	
			ROH- R-25	
0034	00003.000	972946-0137	RES FIX 1.0M OHM 5 % .25 W CARBON FILM	EA
			ROH- R-25	
0034A			R3 R4 R26	
			ROH- R-25	
0035	00001.000	972929-0370	CAP FIX CERAMIC 33.0 PF 10 % 200 V	EA
			QPL-M39014/01-1370	
0035A			C23	
			QPL-M39014/01-1370	
0036	00001.000	230433-0500	CAP 220.0 PF 200V 10 MIL-CK05BX221K	EA
			419-198-0221 95275	
0036A			C34	
			419-198-0221 95275	
0037	00001.000	972929-0397	CAP FIX CERAMIC .001 UF 10% 200V	EA
			QPL-M39014/01-1397	
0037A			C13	
			QPL-M39014/01-1397	
0038	00001.000	972965-0006	CAP FIX CERAMIC 3300 PF 10% 200V	EA
			QPL- CK06BX332K	
0038A			C29	
			QPL- CK06BX332K	
0039	00015.000	972965-0024	CAP FIX CERAMIC .100 MF 10% 100V	EA
			QPL- CK06BX104K	
0039A			C4 C5 C10 C12 C15 C19 C22 C28	
			QPL- CK06BX104K	
0039B			C31 C33 C35 C36 C37 C38 C39	
			QPL- CK06BX104K	
0040	00001.000	230659-0100	CAP .4700 MF 50V +CR-20%	EA
			ERI-8133000Z5U0474M	
0040A			C16	
			ERI-8133000Z5U0474M	
0041	00001.000	535997-0066	CAP .4700 MF 5% 50V	EA
			MIL-CS13BF474K	
0041A			C6	
			MIL-CS13BF474K	
0042	00001.000	972924-0005	CAP FIX TANT SOLID 4.7 MFD 10 % 10 VOLT	EA
			QPL-M39003/1-2254	
0042A			C7	
			QPL-M39003/1-2254	
0043	00004.000	972924-0017	CAP FIX TANT SOLID 1.0 MFD 10 % 35 VOLT	EA
			SPR-150D105X9035A	
0043A			C8 C9 C11 C21	
			SPR-150D105X9035A	
0044	00002.000	972924-0018	CAP FIX TANT SOLID 6.8 MFD 10 % 35 VOLT	EA
			QPL-M39003/1-2304	
0044A			C17 C32	
			QPL-M39003/1-2304	
0045	00003.000	972924-0015	CAP FIX TANT SOLID 47 MFD 10 % 20 VOLT	EA
			QPL-M39003/1-2295	
0045A			C1 C2 C3	
			QPL-M39003/1-2295	
0048	00030.000	972932-0001	DIODE SWITCHING,75V PIV 75MA 4NS TRR	EA
			TI - IN914B	
0048A			CR1 THRU CR8 CR11 THRU CR30	
			TI - IN914B	

PART NUMBER	REV	DESCRIPTION
960080-0001	W	CASSETTE TRANSPORT,PWB ASSY (LAMPS)

ITEM.	QUANTITY.	COMPONENT..	DESCRIPTION	UM
0048B			CR33,CR34	
			TI - IN9148	
0049	00001.000	539468-0002	DIODE 100V PIV RECT. 1 AMP	EA
			TI - IN4002	
0049A			CR9	
			TI - IN4002	
0050	00003.000	972957-0001	TRANSISTOR, NPN,LOW CURRENT AMP TO-5	EA
			MOT- 2N930A	
0050A			Q7 Q11 Q14	
			MOT- 2N930A	
0051	00004.000	972958-0001	TRANSISTOR, PNP,GEN.PURP.SW TO-5	EA
			TI - 2N2905A	
0051A			Q1 Q2 Q26 Q27	
			TI - 2N2905A	
0052	00006.000	972958-0002	TRANSISTOR, PNP,GEN.PURP.SW TO-18	EA
			TI - 2N2907A	
0052A			Q3 Q5 Q9 Q10 Q12 Q15	
			TI - 2N2907A	
0053	00008.000	972948-0002	TRANSISTOR, NPN,GEN.PURP.SW TO-18	EA
			TI - 2N2222A	
0053A			Q8 Q17 Q19 Q22 Q23 Q24 Q25	
			TI - 2N2222A	
0053B			Q28	
			TI - 2N2222A	
0054	00004.000	958762-0003	XST TIP 318 SOA TESTED	EA
			TI -TIP318	
0054A			Q13 Q16 Q18 Q20	
			TI -TIP318	
0055	00001.000	236108-0088	XST N-CHNL PLNR SILICON (WAS TIS-88)	EA
			- 3-000	
0055A			Q6	
			- 3-000	
0057	REF	960082-9901	DIAGRAM,LOGIC-DETAILED,CASSETTE XPORT	EA
0058	00003.000	538428-0001	COIL RF 5.60 UH .32 OHM 495 MA LT10K129	EA
			QPL- MS14046-01	
0058A			L1 L2 L3	
			QPL- MS14046-01	
0059	00001.000	537995-0001	NETWORK MC4044P	EA
			MOT-MC4044P	
0059A			Z3	
			MOT-MC4044P	
0060	00011.000	222224-3011	NETWORK LM301AN OPERATIONAL AMP	EA
			-LM301AN	
0060A			AR1 THRU AR11	
			-LM301AN	
0062	00003.000	222222-7426	NETWORK SN7426N	EA
			-SN7426N	
0062A			Z2 Z7 Z8	
			-SN7426N	
0063	00001.000	222222-7400	NETWORK SN7400N	EA
			- 3-000	
0063A			Z6	
			- 3-000	
0064	00001.000	222222-7474	NETWORK SN7474N	EA
			- 3-000	
0064A			Z5	
			- 3-000	
0065	00001.000	222222-7416	NETWORK SN7416N	EA
			-SN7416N	
0065A			Z1	
			-SN7416N	
0067	00004.000	232583-0008	PAD XST MTG TO-5 WHT	EA
			THR-7717-4N	
0068	00020.000	185113-0001	SPACER XST TO-18 CASE	EA
			* -	
0069	00004.000	418293-0028	SCREW 6-32 UNC-2A X .375 PAN HEAD CRES	EA
			QPL- MS1957-28	
0070	00004.000	418154-0058	WASHER,FLAT #6 CRES	EA
			QPL- NAS620-C6	
0071	00004.000	411101-0058	LOCKWASHER #6 EXTERNAL TOOTH CRES	EA
			QPL- MS35335-58	
0072	00004.000	411115-0064	NUT,PLAIN 6-32 UNC-2B HEX CRES	EA
			QPL- MS35649-264	
0073	00004.000	958770-0001	INSULATOR,KAPTON PLASTIC TO-66	EA
0074	00000.000	772696-0001	HEADER,36PIN 3.600LG SGL ROW,STRIP OF 36	EA
			BEI-65274-1	
0074A			MAY BE USED AS AN ALTERNATE	
			BEI-65274-1	

PART NUMBER	REV	DESCRIPTION.....
960080-0001	W	CASSETTE TRANSPORT,PWB ASSY (LAMPS)

ITEM.	QUANTITY.	COMPONENT..	DESCRIPTION.....	UM
0074B			FOR ITEM 80 81 82 BEI-65274-1	
0075	00001.000	972946-0045	RES FIX 150 OHM 5 % .25 W CARBON FILM ROH- R-25	EA
0075A			R18 ROH- R-25	
0076	00002.000	532736-0002	CAP FIX CERAMIC .02 MF 20/80% 25 VOLT CRL- 2DDU60E203ZAC	EA
0076A			C14,C18 CRL- 2DDU60E203ZAC	
0077	00001.000	972946-0103	RES FIX 39 K OHM 5 % .25 W CARBON FILM ROH- R-25	EA
0077A			R25 ROH- R-25	
0078	00002.000	972934-0007	DIODE SI VOLT REGULATOR 5.6 V 20 MA QPL- 1N752A	EA
0078A			CR31 CR32 QPL- 1N752A	
0080	00006.000	772696-0009	HEADER,2 PIN .200LG SGL ROW,STRIP OF 2 -0002363	EA
0080A			J5 J6 J8 J9 J14 J15 -0002363	
0081	00009.000	772696-0010	HEADER,3 PIN .300LG SGL ROW,STRIP OF 3 -0002364	EA
0081A			J1 J2 J3 J4 J10 J11 J12 J13 -0002364	
0081B			J7 -0002364	
0082	00003.000	772696-0008	HEADER,1 PIN .100LG SGL ROW,STRIP OF 1 -0002431	EA
0082A			TP1E1 TP2E2 TP3E3 -0002431	

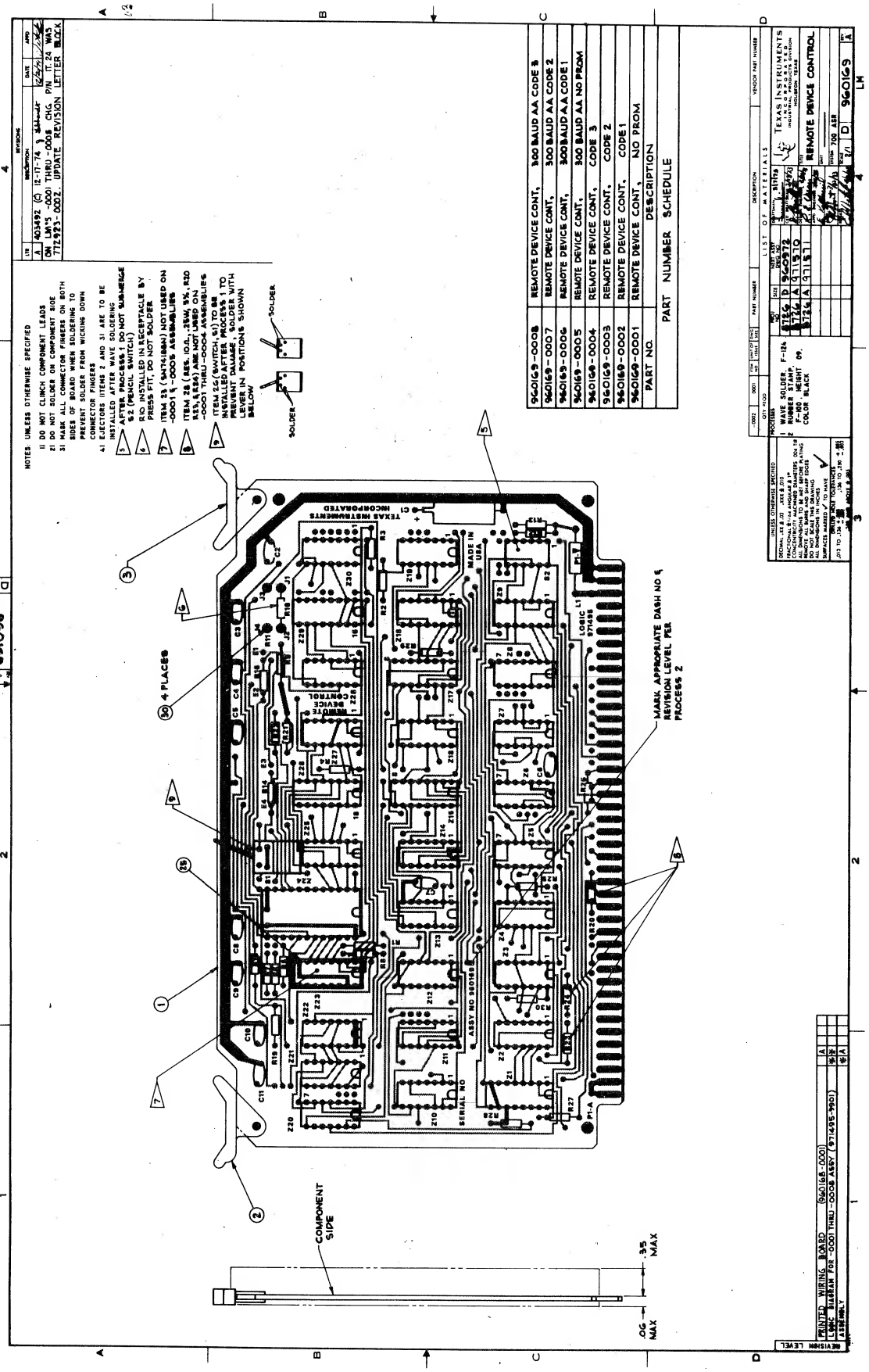

PART NUMBER	REV	DESCRIPTION
960169-0001	A	REMOTE DEVICE CONT,NO PROM

ITEM.	QUANTITY.	COMPONENT..	DESCRIPTION	UM
0001	00001.000	960168-0001	PWB REMOTE DEVICE CONTROL 1209-0168-000	EA
0002	00001.000	231802-0009	EJECTOR WHT 8-200 - 0-000	EA
0002	00001.000	231802-0009	EJECTOR WHT 8-200 - 0-000	EA
0003	00001.000	231802-0006	EJECTOR BLU 8-200 SCA-8-200	EA
0004	00001.000	538433-0001	COIL RF 5.60 UH .13 OHM 885 MA LT10K158 QPL- MS90542-14	EA
0004A			L1 QPL- MS90542-14	
0005	00001.000	972924-0012	CAP FIX TANT SOLID 150 MFD 10 % 15 VOLT QPL-M39003/1-2277	EA
0005A			C1 QPL-M39003/1-2277	
0006	00010.000	532736-0002	CAP FIX CERAMIC .02 MF 20/80% 25 VOLT CRL- 2DDU60E203ZAC	EA
0006A			C2 THRU C11 CRL- 2DDU60E203ZAC	
0007	00003.000	222222-7400	NETWORK SN7400N - 3-000	EA
0007A			Z13,Z20,Z30 - 3-000	
0008	00003.000	222222-7402	NETWORK SN7402N TI--SN7402N	EA
0008A			Z3,Z18,Z19 TI--SN7402N	
0009	00003.000	222222-7403	NETWORK SN7403N	EA
0009A			Z4,Z5,Z9	
0010	00003.000	222222-7404	NETWORK SN7404N	EA
0010A			Z8,Z14,Z25	
0011	00002.000	222222-7408	NETWORK-SN7408N	EA
0011A			Z10,Z21	
0012	00002.000	222222-7425	NETWORK SN7425N	EA
0012A			Z6,Z27	
0013	00001.000	222222-7427	NETWORK SN7427N TI--SN7427N	EA
0013A			Z16 TI--SN7427N	
0014	00001.000	222222-7432	NETWORK SN7432N -SN7432N	EA
0014A			Z28 -SN7432N	
0015	00001.000	222222-7409	NETWORK-SN7409N	EA
0015A			Z7	
0016	00001.000	222222-7474	NETWORK SN7474N - 3-000	EA
0016A			Z22 - 3-000	
0017	00001.000	222222-7154	NETWORK SN74154N -SN74154N	EA
0017A			Z24 -SN74154N	
0018	00001.000	222222-7155	NETWORK SN74155N	EA
0018A			Z29	
0019	00003.000	222222-7164	NETWORK SN74164N TI--SN74164N	EA
0019A			Z2,Z11,Z12 TI--SN74164N	
0020	00001.000	222222-7165	NETWORK SN74165N	EA
0020A			Z1	
0021	00002.000	222222-7174	NETWORK SN74174N	EA
0021A			Z15,Z26	

PART NUMBER	REV	DESCRIPTION
960169-0001	A	REMOTE DEVICE CONT,NO PROM

ITEM.	QUANTITY.	COMPONENT..	DESCRIPTION.	UM
0022	00001.000	222222-7175	NETWORK SN74175N	EA
0022A			Z17	
0024	00001.000	972594-0002	SWITCH,ROCKER-PWB MOUNTED	EA
0024A			S2	
0025	00001.000	539544-0002	SOCKET,IC 16 PIN TI -C931602	EA
0025A			XZ23 TI -C931602	
0026	00001.000	235722-0006	SWITCH SUBMINI. TOGGLE 2 POSITION - C-CT8201	EA
0026A			S1 - C-CT8201	
0027	00002.000	972946-0089	RES FIX 10 K OHM 5 % .25 W CARBON FILM ROH- R-25	EA
0027A			R28,R29 ROH- R-25	
0028	00007.000	972946-0017	RES FIX 10.0 OHM 5 % .25 W.CARBON FILM ROH- R-25	EA
0028A			R10,R14,R16,R18,R25,R26,R27 ROH- R-25	
0029	00015.000	972946-0072	RES FIX 2.0K OHM 5 % .25 W CARBON FILM ROH- R-25	EA
0029A			R1 THRU R9,R12,R13,R19,R21 ROH- R-25	
0029B			R22,R30 ROH- R-25	
0030	00004.000	539493-0001	RECEPTACLE ACCEPTS LEAD SIZE.018-.040GLD AMP-1-380737-0	EA
0030A			J1 THRU J4 AMP-1-380737-0	
0031	REF	971495-9901	ELTN SCHEMATIC DIAG,REMOTE DEVICE CONT	EA

NOTES:

1. MAXIMUM COMPONENT HEIGHT IS .400
2. MAXIMUM LEAD LENGTH IS .062
3. AFTER PROCESS 2 DO NOT SUBMERGE ITEM 8

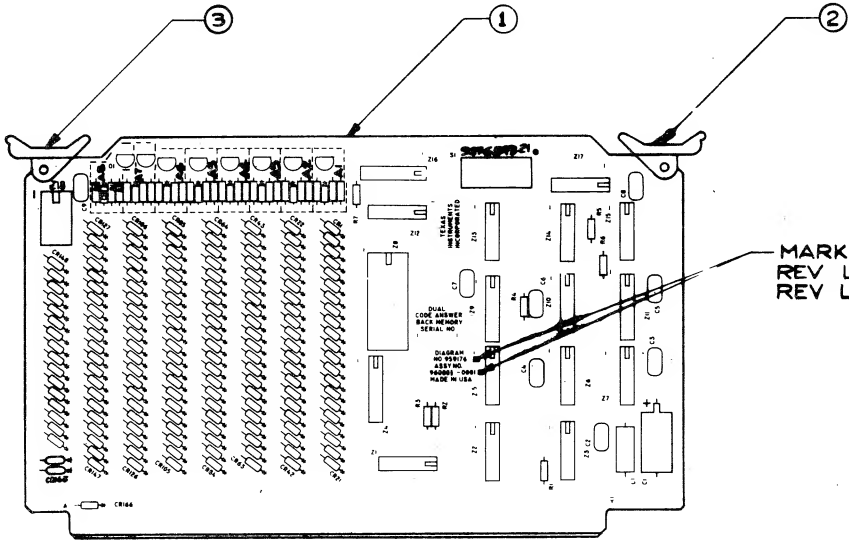

REVISIONS

ZONE	LTR	DESCRIPTION	DATE	APPROVED
	D	372621 (B) 1-11-73 1) REV & REDRAWN WITH MAJOR CHANGES; WAS D SIZE DWG	2/6/73	
B4	E	381348 (B) L. Pierce 10-11-73 1. LM IT. 2 WAS P/N 231802-0103 2. LM IT. 3 WAS P/N 231802-0100 3. POSITIONS OF CR164 & CR165 REVISED TO AGREE WITH A/W ON F/D	10/17/73	
	F	382872 (E) 1-22-74 UPDATED REV. LEVEL BLOCK.	1/23/74	
	G	391548 (E) 7-30-74 UPDATED REVISION LEVEL BLOCK	7-30-74	
	H	396766 (D) 8-15-74 1) UPDATED REV LEVEL BLOCK. 2) ON LM, CHANGED ITEM 5, WAS P/N 230906-0000, QTY 1.	8/19/74	
	J	389233 (D) 10-28-74 1) CHG P/N OF IT. 7 WAS 772923-0004, IT. 7A WAS S2. 2) ADDED IT. 30 AND 30A. 3) ZONE C-4 Z18 WAS S2 WITH PIN NUMBERS NUMBERED. 4) CHG NOTE 3 WAS AFTER PROCESS... ITEM 7 AND 8. UPDATED REVISION LEVEL BLOCK.	10/30/74	
	K	403492 (C) 12-17-74 1. CHG P/N IT. 8 WAS 772923-0006. UPDATED REVISION LEVEL BLOCK.	12/19/74	
	L	CN423959 L. King 1) ADD ITEMS 31 & 31A (2) ITEM 29 QTY WAS 8 3) ITEM 13 PN WAS 972948-0002	6-22-77	

REVISION LEVEL

PRINTED WIRING BOARD 960882	A	B	C	D	D	E	E	H
DIAGRAM FOR -0001 ASSY (959176-9901)	*	*	*	*	A	B	B	C
ASSEMBLY	D	E	F	G	H	J	K	L

PROCESSES:

1. RUBBER STAMP F100 HEIGHT .09 COLOR YEL
2. WAVE SOLDER F-124 AND/OR SOLDER PER F-127

QTY REQD -2	QTY REQD -1	ITEM NO	CODE IDENT	PART OR IDENTIFYING NUMBER	NOMENCLATURE OR DESCRIPTION	PROCUREMENT SPECIFICATION

PARTS LIST

UNLESS OTHERWISE SPECIFIED
- REMOVE ALL BURRS AND SHARP EDGES
- CONCENTRICITY MACHINED DIAMETERS .010 FIR
- DIMENSIONAL LIMITS APPLY BEFORE FINISH PROCESSING
- IDENTIFYING NUMBERS SHOWN IN PARENTHESES FOR REFERENCE ONLY
- INTERPRET DRAWING IN ACCORDANCE WITH MIL-STD-100

HOLE TOLERANCE

.013 THRU .125 ± .004 / -.001	.126 THRU .250 ± .005 / -.001	.251 THRU .500 ± .006 / -.001
.501 THRU .750 ± .008 / -.001	.751 THRU 1.000 ± .010 / -.001	1.001 THRU 2.000 ± .012 / -.001

NEXT ASSY	USED ON
960973	8726
960972	8726
960971	8726
960970	8726

APPLICATION

UNLESS OTHERWISE SPECIFIED
- DIMENSIONS ARE IN INCHES
- TOLERANCES: ANGLES ± 1° 3 PLACE DECIMALS ± .010 2 PLACE DECIMALS ± .02

MATERIAL:

DWN 12-29-72 DATE
CHK 1/18/73
ENGR 1/18/73
QA 1/31/73
APVD 1/18/73
CONTR NO
DESIGN ACTIVITY RELEASE 2/7/73

TEXAS INSTRUMENTS INCORPORATED
Equipment Group Dallas, Texas

DUAL CODE ANSWER BACK MEMORY

SIZE	CODE IDENT NO	DRAWING NO
C	96214	960881

SCALE 1/1 SHEET 1 OF 1

LM

FILMED

C 960881

PART NUMBER	REV	DESCRIPTION
0960881-0001	L	DUAL CODE ANSWER BACK MEMORY

ITEM.	QUANTITY.	COMPONENT..	DESCRIPTION	UM
0001	00001.000	0960882-0001	PW BOARD,DUAL CODE ANSWER BACK MEMORY	EA
			1209-0882-000	
0002	00001.000	0413277-0004	EJECTOR,PCB,NON-LOCKING,ORANGE	EA
			SCA - S--00(ORANGE)	
0003	00001.000	0413277-0001	EJECTOR,PCB,NON-LOCKING,WHITE	EA
			SCA - S--00(NATURAL)	
0004	00008.000	0532736-0002	CAP FIX CERAMIC .02 MF 20/80% 25 VOLT	EA
			CRL - 2-0U60E203ZAC	
0004A			C2 THRU C9	
			CRL - 2-0U60E203ZAC	
0005	00001.000	0572524-0011	CAP FIX TANT SOLID 68 MFD 10 % 15 VOLT	EA
			CPL - M3-003/1-2274	
0005A			C1	
			CPL - M3-003/1-2274	
0006	00001.000	0538433-0001	COIL RF 5.60 UH .13 OHM 885 MA LT10K158	EA
			CPL - M-90542-14	
0006A			L1	
			CPL - M-90542-14	
0007	00001.000	0572007-1220	NETWORK,RES 14 PIN 7 ELEM 22.00 OHMS	EA
			BEC - -8-9-3-R22	
0007A			Z18	
			BEC - -8-9-3-R22	
0008	00001.000	0572594-0006	SWITCH,ROCKER-PWR MOUNTED	EA
0008A			S1	
0009	00016.000	0972946-0083	RES FIX 5.6K OHM 5 % .25 W CARBON FILM	EA
			RCH - R-25	
0009A			A1R1 THRU A4R1 A1R3 THRU	
			ROH - R-25	
0009B			A8R3	
			ROH - R-25	
0010	00015.000	0972946-0089	RES FIX 10K OHM 5% .25 W CARBON FILM	EA
			ROH - R-25	
0010A			A1R2 THRU A8R2 R1 THRU R7	
			RCH - R-25	
0011	00166.000	0572532-0001	DIODE,1N914B SWITCHING 75V PIV 75MA 4NS	EA
			TI - I-914B	
0011A			CR1 THRU CR166	
			TI - I-914B	
0012	00008.000	0231784-6000	DIODE- 2 PELLET, SILICON,MULTI	EA
			GE - MP-200	
0012A			A1CR1 THRU A8CR1	
			GE - MP-200	
0013	00008.000	0572057-0001	TRANSISTOR-A5T2222 NPN SILICON	EA
			TI- - A5-2222	
0013A			A1Q1 THRU A8Q1	
			TI - 2-2222A	
0014	00001.000	0222222-7155	NETWORK SN74155N	EA
0014A			Z4	
0015	00001.000	0222222-7402	NETWORK SN7402N	EA
			TI- - SN-402N	
0015A			Z6	
			TI- - SN-402N	
0016	00001.000	0222222-7404	NETWORK SN7404N	EA
0016A			Z17	
0017	00002.000	0222222-7408	NETWORK-SN7408N	EA
0017A			Z2 Z3	
0018	00002.000	0222222-7432	NETWORK SN7432N	EA
			- SN-432N	
0018A			Z5 Z14	
			- SN-432N	
0019	00003.000	0222222-7474	NETWORK SN7474N	EA
			- 3-000	
0019A			Z1 Z7 Z10	
			- 3-000	
0020	00001.000	0222222-7164	NETWORK SN74164N	EA
			TI- - SN-4164N	
0020A			Z15	
			TI- - SN-4164N	
0021	00001.000	0222222-7165	NETWORK SN74165N	EA
0021A			Z16	

PART NUMBER	REV	DESCRIPTION
0960881-0001	L	DUAL CODE ANSWER BACK MEMORY

ITEM.	QUANTITY.	COMPONENT..	DESCRIPTION	UM
0022	00001.000	0222222-7175	NETWORK SN74175N	EA
0022A			Z9	
0023	00001.000	0222222-7197	NETWORK SN74197N	EA
0023A			Z12	
0024	00001.000	0222222-7154	NETWORK SN74154N - SN-4154N	EA
0024A			Z8 - SN-4154N	
0025	00001.000	0222222-7442	NETWORK-SN7442N	EA
0025A			Z11	
0026	REF	0959176-9901	DIAGRAM,LOGIC DET-DUAL CODE ANS BK MEM	EA
0027	REF	0959216-0001	PROGRAM TEST,DUAL CODE ANSWER BK MEMORY	EA
0028	00001.000	0222222-7403	NETWORK SN7403N	EA
0028A			Z13	
0029	00000.000	0185113-0001	X SPACER XST TO-18 CASE * - -	EA
0029A			A1 THRU A8 * - -	
0030	00001.000	0539544-0001	SOCKET,14PIN IC LOW PROFILE SOLDER TAIL TI - C9--14-02	EA
0030A			XZ18 TI - C9--14-C2	
0031	00000.000	0972948-0002	TRANSISTOR,2N2222A NPN GEN PURP SW TO-18 TI - 2-2222A	EA
0031A			ITEM 31 MAY BE USED WITH TI - 2-2222A	
0031B			ITEM 29 AS AN ALTERNATE TO TI - 2-2222A	
0031C			ITEM 13 TI - 2-2222A	

NOTES:
1. DO NOT CLINCH COMPONENT LEADS
2. DO NOT SOLDER ON COMPONENT SIDE
3. MASK ALL CONNECTOR FINGERS ON BOTH SIDES OF BOARD BEFORE SOLDERING TO PREVENT SOLDER FROM WICKING DOWN CONNECTOR FINGERS
4. EJECTOR ITEM 2 IS TO BE INSTALLED AFTER WAVE SOLDERING
5. INSTALL R1 ON -0002 ONLY AND -0004 ONLY. INSTALL R2 ON -0001 AND -0003 ONLY. SEE VIEW A"
6. R18 INSTALLED ON -0001 AND -0002 ONLY. R23 INSTALLED ON -0003 AND -0004 ONLY. SEE VIEW A"

REVISIONS

ZONE	LTR	DESCRIPTION	DATE	APPROVED
	A	371742 (C) 8.8 M — 8-14-73 CHG: 1)-0001 LM ITEM 3 QTY WAS 3 ADDED: 1) REF DES. R27 & R28 ON ITEM 7A, -0001 & -0002 LMS 2) ON -0001 & -0002 LMS ITEM 8A, REF DES. R26 & R29	8-14-73	
	B	383359 (B) — 10-18-73 ADDED: 1) FLAGE NOTE 6 IN ZONE D 3 2) DASH -0003 & 0004 P/N & DESCRIPTION CHG: 1) DASH NO 0001 WAS AUTO ANSWER CONTROL-MODEM 2) DASH NO. 0002 WAS AUTO ANSWER CONTROL-EIA. DELETED: 1) IT'S QTY WAS 1 P/N 230916-0100 2) ZONE C3 KEY BLOCK IN P1 ADDED: ZONE E & MARK REV LETTER BLOCK. UPDATED REV STATUS BLOCK		
	C	386981 (D) G. Bustamante 3-20-74 ON ZONE C3 VIEW A WAS DRAWN & ADDED CALLOUT TO NOTES 5 & 6	3/21/74	
	D	392479 (D) G B.I + 4-1-74 ON ZONE A 7,8 REVISION LEVEL BLOCK WAS UPDATED — ALL LL PRINTED WIRING BOARD TO — LEVEL BLOCK	4-1-74	
	E	391358 (E) — 7-23-74 UPDATED REV LEVEL BLOCK UPDATED ASSY TO AGREE WITH LATEST ARTWORK CHANGE	7/31/74	
	F	396768 (D) — 8-14-74 CHG: -0001-0002-0003-0004 LM IT.4 WAS: 230906-0000, CASE SIZE D. UPDATED REV LEVEL BLOCK.	8/12/74	

MARK APPROPRIATE REV. LTR PER REV LEVEL BLOCK

MARK APPROPRIATE DASH NO. & REV LETTER PER PROCESS 2

GRY-0002 VIO-0001

TEXAS INSTRUMENTS INCORPORATED MADE IN U.S.A. SERIAL NO (

DIAGRAM NO 962307

VIEW A
SCALE : NONE

0.45 — 0.25±.04

CONDUCTOR SIDE

.37 MAX — .06 MAX

PART NO.	DESCRIPTION
960885-0004	AUTO ANSWER CONTROL - EIA W/O/ANSB
960885-0003	AUTO ANSWER CONTROL-MODEM. W/O/ANSB
960885-0002	AUTO ANSWER CONTROL - EIA W/ANSB
960885-0001	AUTO ANSWER CONTROL-MODEM. W/ANSB

PROCESSES:
1. WAVE SOLDER F-124
2. RUBBER STAMP F-109, HEIGHT .09, COLOR BLK

REVISION LEVEL	PRINTED WIRING BOARD (960884-0001)	C	C	C	E	F	G	G
	LOGIC DIAGRAM FOR -0004 ASSY (962307-9801)	#	A	B	B	F	B	C
	LOGIC DIAGRAM FOR -0003 ASSY (962307-9701)	#	A	B	B	E	B	C
	LOGIC DIAGRAM FOR -0002 ASSY (962307-9901)	#	A	B	B	B	B	C
	LOGIC DIAGRAM FOR -0001 ASSY (962307-9601)	#	A	B	B	B	B	C
	ASSEMBLY	#	A	B	C	D	E	F

UNLESS OTHERWISE SPECIFIED
- REMOVE ALL BURRS AND SHARP EDGES
- CONCENTRICITY MACHINED DIAMETERS .010 FIR
- DIMENSIONAL LIMITS APPLY BEFORE FINISH PROCESSING
- IDENTIFYING NUMBERS SHOWN IN PARENTHESES FOR REFERENCE ONLY
- INTERPRET DRAWING IN ACCORDANCE WITH MIL-STD-100

HOLE TOLERANCE

.013 THRU .128 ± .001	.129 THRU .390 ± .001	.391 THRU .800 ± .001
.801 THRU .730 ± .001	.731 THRU 1.000 ± .001	1.001 THRU 2.000 ± .001

460494 — 8726
NEXT ASSY — USED ON
APPLICATION

UNLESS OTHERWISE SPECIFIED
- DIMENSIONS ARE IN INCHES
- TOLERANCES ANGLES ±1°
  2 PLACE DECIMALS ±.010
  3 PLACE DECIMALS ±.02
- MATERIAL:

QTY REQD	ITEM NO	CODE IDENT	PART OR IDENTIFYING NUMBER	NOMENCLATURE OR DESCRIPTION	PROCUREMENT SPECIFICATION

PARTS LIST

	DATE
DSN	8-8-73
CHK	8/10/73
ENGR	8-24-73
QA	8/24/73
APVD	8/24/73
CONTR NO	
DESIGN ACTIVITY RELEASE	8-22-73

TEXAS INSTRUMENTS INCORPORATED Equipment Group Dallas, Texas

AUTO ANSWER CONTROL

SIZE	CODE IDENT NO	DRAWING NO
D	96214	960885

SCALE 8/1 | REV F | SHEET 1

TI-7014 E P3

LM

PART NUMBER	REV	DESCRIPTION.....
960885-0001	F	AUTO ANSWER CONTROL-MODEM,W/ANSB

ITEM.	QUANTITY.	COMPONENT..	DESCRIPTION.....	UM
0001	00001.000	960884-0001	PWB AUTO ANSWER CONTROL	EA
			1209-0884-000	
0002	00001.000	231802-0007	EJECTOR VIO 8-200	EA
			SCA-8-200	
0003	00013.000	230561-0000	CAP .0200C MF 25V 80/-20 %	EA
			ERI-5835Y5U203Z	
0003A			C4 THRU C16	
			ERI-5835Y5U203Z	
0004	00001.000	230855-0001	CAP 68,000 MF 15V 10% CASE SIZE C	EA
			MIL-CS13BD686K	
0004A			C3	
			MIL-CS13BD157K	
0006	00001.000	418C93-0010	CCIL 5.60 UH .13 OHMS 10%	EA
			MIL-MS90542-14	
C006A			L1	
			MIL-MS90542-14	
0007	00010.000	233221-0000	RES 10.000 OHM .25W 5.	EA
			AB -CB1005	
0007A			R2 R3 R5 R10 R11 R12 R18 R25	
			AB -CB1005	
0007B			R27,R28	
			AB -CB1005	
0008	00010.000	233869-0000	RES 2000.0 OHM .25W 5.	EA
			AB -CB2025	
0008A			R4 R6 R7 R8 R9 R13 R14 R24	
			AB -CB2025	
0008B			R26,R29	
			AB -CB2025	
0009	00018.000	539493-0001	RECEPTACLE ACCEPTS LEAD SIZE.018-.040GLD	EA
			AMP-1-380737-0	
0009A			J1 THRU J18	
			AMP-1-380737-0	
0010	00003.000	222222-7400	NETWORK SN7400N	EA
			- 3-000	
0010A			Z10 Z11 Z16	
			- 3-000	
0011	00001.000	222222-7404	NETWORK SN7404N	EA
0011A			Z3	
0012	00001.000	222222-7405	NETWORK SN7405N	EA
0012A			Z13	
0013	00001.000	222222-7409	NETWORK-SN7409N	EA
0013A			Z6	
0014	00001.000	222222-7410	NETWORK SN7410N	EA
			- 3-000	
0014A			Z9	
			- 3-000	
0015	00001.000	222222-7427	NETWORK SN7427N	EA
			TI--SN7427N	
0015A			Z4	
			TI--SN7427N	
0016	00001.000	222222-7474	NETWORK SN7474N	EA
			- 3-000	
0016A			Z12	
			- 3-000	
0017	00002.000	222222-7175	NETWORK SN74175N	EA
0017A			Z5 Z14	
0018	00002.000	222222-7197	NETWORK SN74197N	EA
0018A			Z8 Z15	
0019	00001.000	537948-0001	NETWORK SN75150P	EA
			TI -SN75150P	
0019A			Z7	
			TI -SN75150P	
0020	00001.000	537947-0001	NETWORK SN75154N	EA
			TI -SN75154N	
0020A			Z1	
			TI -SN75154N	
0021	00001.000	222222-7497	NETWORK SN7497N	EA
0021A			Z2	
0022	REF	962307-9901	DIAG,LOGIC-DET AUTO ANSWER CONT	EA

NOTES: CONT

9 TRANSFORMER (ITEM 90) TO BE INSTALLED ON CONDUCTOR SIDE OF BOARD, DO NOT CLEAN TRANSFORMER WITH SOLVENTS

NOTES: UNLESS OTHERWISE SPECIFIED

1. DO NOT CLINCH COMPONENT LEADS
2. DO NOT SOLDER ON COMPONENT SIDE
3. MASK ALL CONNECTOR FINGERS ON BOTH SIDES OF BOARD WHEN SOLDERING TO PREVENT SOLDER FROM WICKING DOWN CONNECTOR FINGERS
4. INSTALL AFTER WAVE SOLDERING
5. MAXIMUM COMPONENT HEIGHT FROM COMPONENT SIDE OF BOARD IS .375
6. MAXIMUM LEAD LENGTH FROM CONDUCTOR SIDE OF BOARD IS .062
7. INDICATES COMPONENTS NOT USED
8. MAXIMUM COMPONENT HEIGHT FROM CONDUCTOR SIDE OF BOARD .53

REVISIONS

ZONE	LTR	DESCRIPTION	DATE	APPROVED
	F	308642(D) [illegible] (1) REPLACES REV E WITH CHANGE; (2) REDESIGNED CIRCUITRY	5/2 /75	[illegible]

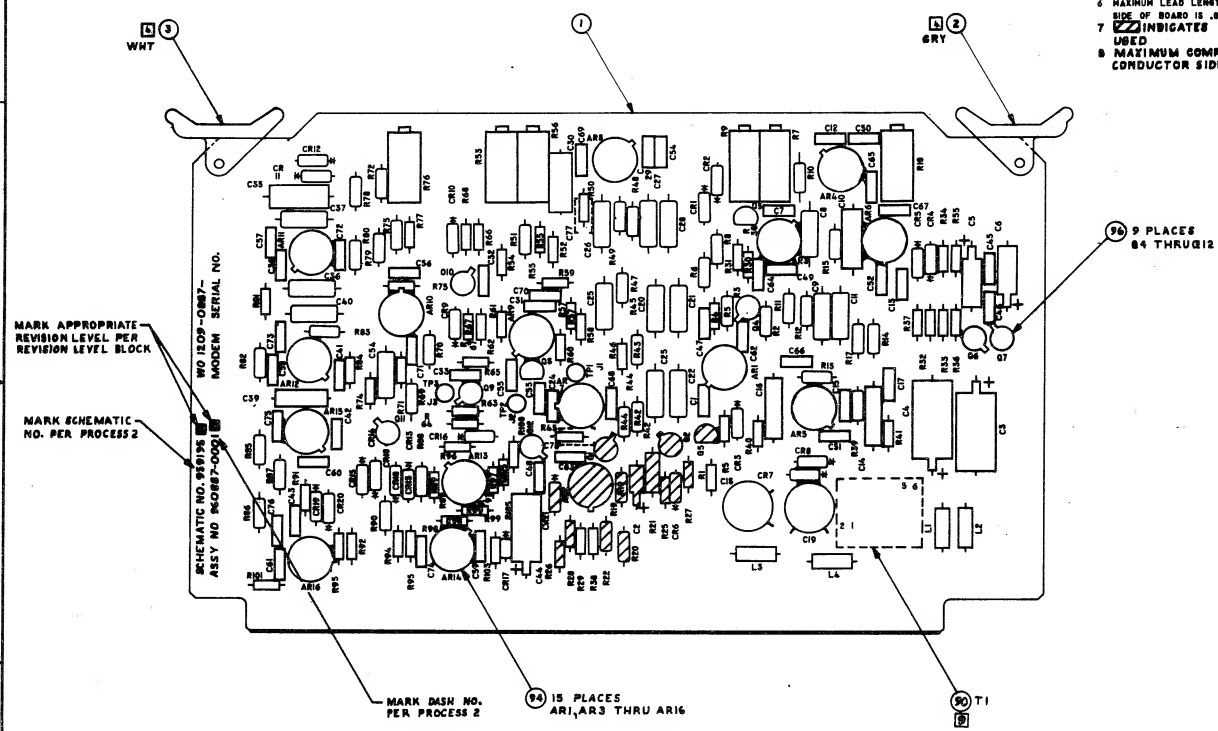

-0001 ONLY

PROCESSES:

1. WAVE SOLDER PER F-124 AND (OR) SOLDER PER F-127
2. RUBBER STAMP PER F-100, HEIGHT, .09, COLOR BLACK

SHEET NO.	DESCRIPTION	PART NO.
3	MODEM, ATH	[illegible]
2	MODEM, ATL-2	[illegible]
1	MODEM, ATL	[illegible]

QTY REQD -2	QTY REQD -1	ITEM NO	CODE IDENT	PART OR IDENTIFYING NUMBER	NOMENCLATURE OR DESCRIPTION	PROCUREMENT SPECIFICATION

PARTS LIST

UNLESS OTHERWISE SPECIFIED
- REMOVE ALL BURRS AND SHARP EDGES
- CONCENTRICITY MACHINED DIAMETERS .010 FIR
- DIMENSIONAL LIMITS APPLY BEFORE FINISH PROCESSING
- IDENTIFYING NUMBERS SHOWN IN PARENTHESES FOR REFERENCE ONLY
- INTERPRET DRAWING IN ACCORDANCE WITH MIL-STD-100

HOLE TOLERANCE

.013 THRU .125 +.004 -.001	.126 THRU .250 +.005 -.001	.251 THRU .500 +.006 -.001
.501 THRU .750 +.008 -.001	.751 THRU 1.000 +.010 -.001	1.001 THRU 2.000 +.012 -.001

NEXT ASSY	USED ON
973954	8726
973953	8726
973952	8726
973951	8726

APPLICATION

UNLESS OTHERWISE SPECIFIED
- DIMENSIONS ARE IN INCHES
- TOLERANCES
  ANGLES ±1°
  3 PLACE DECIMALS ±.010
  2 PLACE DECIMALS ±.02

MATERIAL:

DWN [illegible] DATE 9-11-74
CHK [illegible] 5-8-74
ENGR [illegible] 5/8/75
QA [illegible] 5/9/75
APPD [illegible] 5/9/75
CONTR NO [illegible] 5/12/75
DESIGN ACTIVITY RELEASE [illegible] 5/16/75

TEXAS INSTRUMENTS INCORPORATED
Equipment Group Dallas, Texas

MODEM

SIZE	CODE IDENT NO	DRAWING NO
D	96214	960887

SCALE 2/1 REV F SHEET 1 OF 3

LM

REVISION LEVEL		
PRINTED WIRING BOARD	C	
LOGIC DIAGRAM FOR-0003 ASSY 962301-9901	D	
LOGIC DIAGRAM FOR-0002 ASSY 962300-9901	D	
LOGIC DIAGRAM FOR -0001 ASSY 959195-9901	B	
ASSEMBLY 960887	F	

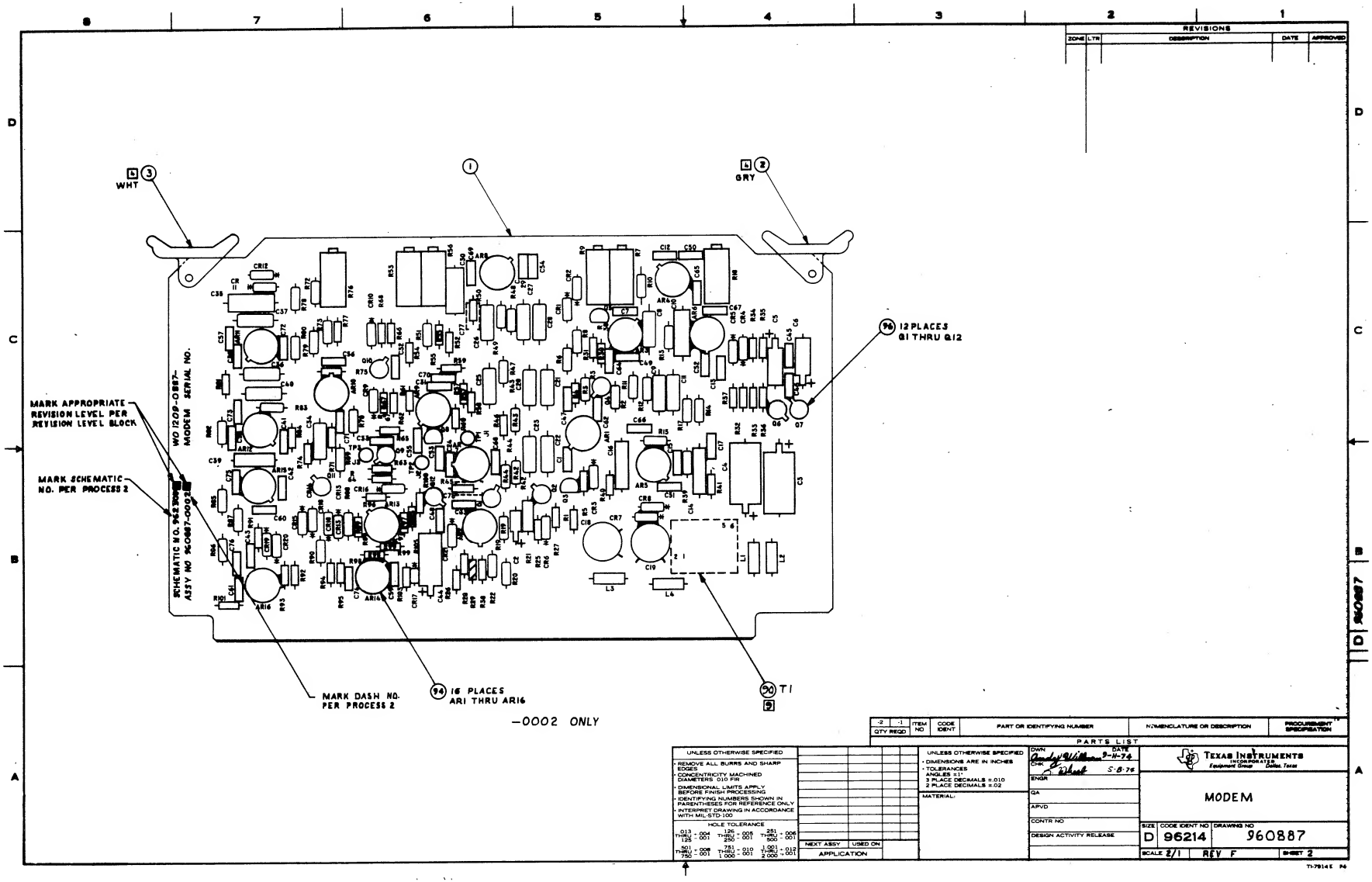

REVISIONS
ZONE
LTR
DESCRIPTION
DATE
APPROVED
WHT
GRY
12 PLACES Q1 THRU Q12
MARK APPROPRIATE REVISION LEVEL PER REVISION LEVEL BLOCK
MARK SCHEMATIC NO. PER PROCESS 2
WO 1209-0887- MODEM SERIAL NO.
SCHEMATIC NO. 962300
ASSY NO 960887-0002
MARK DASH NO. PER PROCESS 2
16 PLACES AR1 THRU AR16
T1
-0002 ONLY
QTY REQD
ITEM NO
CODE IDENT
PART OR IDENTIFYING NUMBER
NOMENCLATURE OR DESCRIPTION
PROCUREMENT SPECIFICATION
PARTS LIST
UNLESS OTHERWISE SPECIFIED
• REMOVE ALL BURRS AND SHARP EDGES
• CONCENTRICITY MACHINED DIAMETERS .010 FIR
• DIMENSIONAL LIMITS APPLY BEFORE FINISH PROCESSING
• IDENTIFYING NUMBERS SHOWN IN PARENTHESES FOR REFERENCE ONLY
• INTERPRET DRAWING IN ACCORDANCE WITH MIL-STD-100
HOLE TOLERANCE
.013 THRU .125 - .004 .001
.126 THRU .250 - .005 .001
.251 THRU .500 - .006 .001
.501 THRU .750 - .008 .001
.751 THRU 1.000 - .010 .001
1.001 THRU 2.000 - .012 .001
NEXT ASSY
USED ON
APPLICATION
UNLESS OTHERWISE SPECIFIED
• DIMENSIONS ARE IN INCHES
• TOLERANCES
ANGLES ±1°
3 PLACE DECIMALS ±.010
2 PLACE DECIMALS ±.02
MATERIAL:
DWN
DATE 9-11-74
CHK
5-8-74
ENGR
QA
APVD
CONTR NO
DESIGN ACTIVITY RELEASE
TEXAS INSTRUMENTS INCORPORATED
Equipment Group Dallas, Texas
MODEM
SIZE D
CODE IDENT NO 96214
DRAWING NO 960887
SCALE 2/1
REV F
SHEET 2
TI-7914E P4

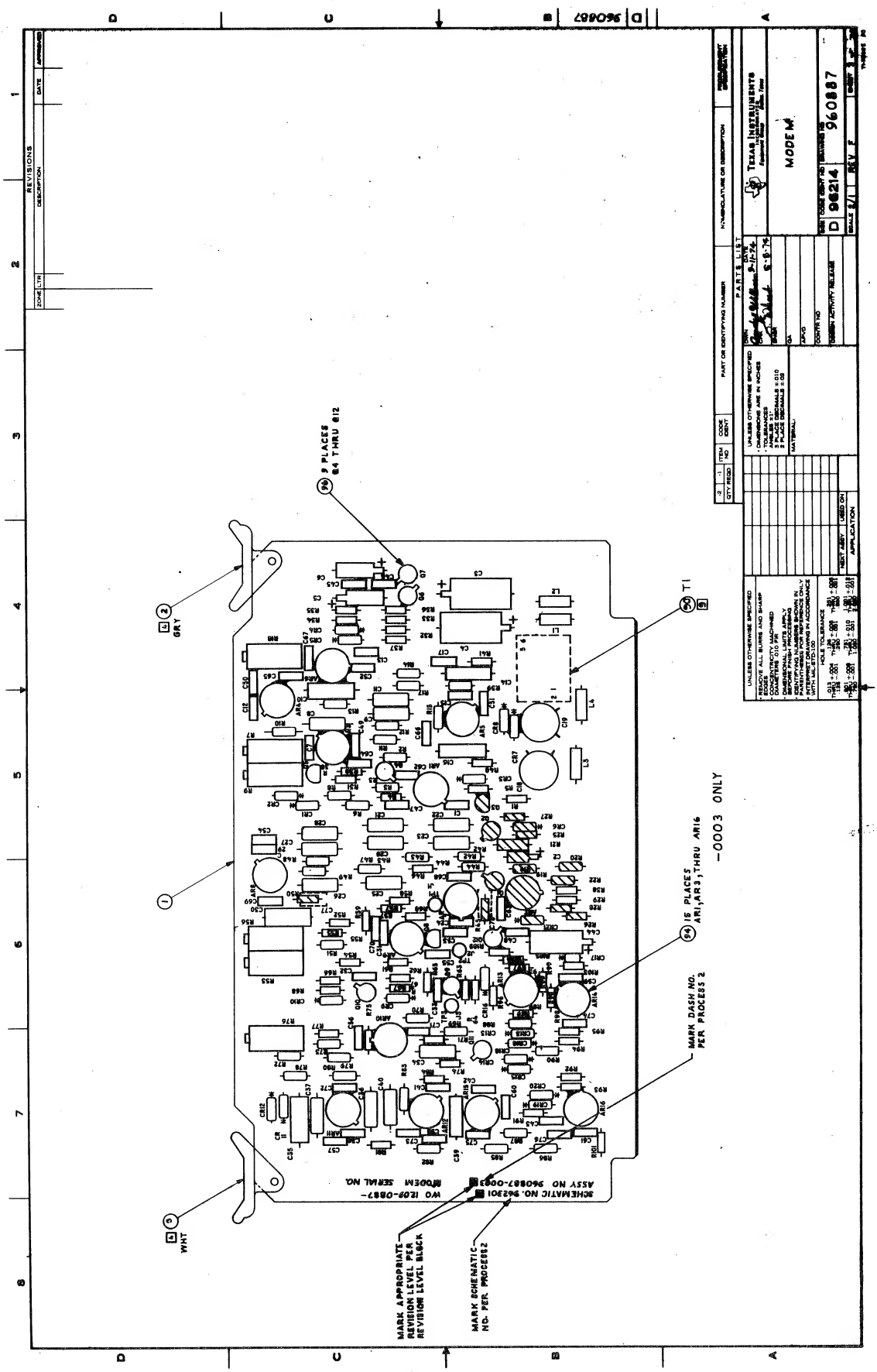
9 PLACES
E4 THRU E12
GRY
WHT
T1
15 PLACES
AR1,AR3,THRU AR16
-0003 ONLY
MARK DASH NO.
PER PROCESS 2
MARK APPROPRIATE
REVISION LEVEL PER
REVISION LEVEL BLOCK
MARK SCHEMATIC
NO. PER PROCESS 2
SCHEMATIC NO. 962301
ASSY NO 960887-0003
WO 1209-0887-
MODEM SERIAL NO.
MODEM
D 96214
960887
TEXAS INSTRUMENTS
PARTS LIST
REVISIONS

PART NUMBER	REV	DESCRIPTION
960887-0001	G	MODEM,ATL
960887-0002	G	MODEM,ATL-2
960887-0003	G	MODEM,ATH

ITEM.	QUANTITY.	COMPONENT..	DESCRIPTION	
C001	00001.000	960886-0001	PB BCARD,MODEM	EA
			1209-0886-000	
C002	00001.000	231802-0008	EJECTOR GRY 8-200	EA
			SCA-8-200	
C003	00001.000	231802-0009	EJECTOR WHT 8-200	EA
			- 0-000	
C004	00002.000	972946-0065	RES FIX 1.0K OHM 5 % .25 W CARBON FILM	EA
			ROH- R-25	
C004A			R30,R37	
			ROH- R-25	
C005	00002.000	972946-0096	RES FIX 20 K OHM 5 % .25 W CARBON FILM	EA
			ROH- R-25	
C005	00002.000	972946-0097	RES FIX 22 K OHM 5 % .25 W CARBON FILM	EA
			ROH- R-25	
C005A			R81,R97	
			ROH- R-25	
C005A			R84,R97	
			ROH- R-25	
C006	00002.000	972946-0073	RES FIX 2.2K OHM 5 % .25 W CARBON FILM	EA
			ROH- R-25	
C006A			R61,R96	
			ROH- R-25	
C007	00004.000	234225-0000	RES 15000. OHM .25W 5.	EA
			AB -CB1535	
C007A			R84,R94,R95,R25	
			AB -CB1535	
C008	00003.000	972946-0099	RES FIX 27 K OHM 5 % .25 W CARBON FILM	EA
			ROH- R-25	
C008A			R31,R105,R27	
			ROH- R-25	
C009	00001.000	972946-0033	RES FIX 47.0 OHM 5 % .25 W.CARBON FILM	EA
			ROH- R-25	
C009A			R41	
			ROH- R-25	
C010	00003.000	972946-0039	RES FIX 82.0 OHMS 5 % .25 W CARBON FILM	EA
			ROH- R-25	
C010A			R40,R46,R71	
			ROH- R-25	
C011	00002.000	972946-0098	RES FIX 24 K OHM 5 % .25 W CARBON FILM	EA
			ROH- R-25	
C011	00001.000	539371-0442	RES FIX FILM 3.92K OHM 1% .13 WATT	EA
			COR- NC4	
C011A			R45,R50	
			ROH- R-25	
C011A			R43	
			COR- NC4	
C012	00008.000	972946-0089	RES FIX 10 K OHM 5 % .25 W CARBON FILM	EA
			ROH- R-25	
C012A			R1,R60,R62,R65,R66,R67,R75,	
			ROH- R-25	
C012B			R99	
			ROH- R-25	
C014	00006.000	972946-0075	RES FIX 2.7K OHM 5 % .25 W CARBON FILM	EA
			ROH- R-25	
C014A			R54,R63,R38,R101,R103,R29	
			ROH- R-25	
C015	00003.000	972946-0081	RES FIX 4.7K OHM 5 % .25 W CARBON FILM	EA
			ROH- R-25	
C015A			R68,R92,R5	
			ROH- R-25	
C016	00001.000	972946-0071	RES FIX 1.8K OHM 5 % .25 W CARBON FILM	EA
			ROH- R-25	
C016A			R64	
			ROH- R-25	
C017	00002.000	972946-0083	RES FIX 5.6K OHM 5 % .25 W CARBON FILM	EA
			ROH- R-25	
C017A			R58,R74	
			ROH- R-25	
C018	00001.000	972946-0145	RES FIX 2.2M OHM 5 % .25 W CARBON FILM	EA
			ROH- R-25	
C018A			R89	
			ROH- R-25	
C019	00003.000	972976-0187	RES FIX COMP 1/4 W 15 MEGOHM 5 %	EA
			QPL-RC07G156JS	
C019A			R55,R93,R98	
			QPL-RC07G156JS	
C020	00002.000	972946-0113	RES FIX 100K OHM 5 % .25 W CARBON FILM	EA
			ROH- R-25	

PART NUMBER	REV	DESCRIPTION
560887-0001	G	MODEM,ATL
560887-0002	G	MODEM,ATL-2
560887-0003	G	MODEM,ATH

ITEM.	QUANTITY.	COMPONENT..	DESCRIPTION	
C020A			R57 R100 ROH- R-25	
C021	00001.000	972976-0177	RES FIX COMP 1/4 W 5.6 MEGOHM 5 % GPL-RC07G565JS	EA
C021A			R59 GPL-RC07G565JS	
C022	00002.000	539370-0465	RES FIX FILM 6.81K OHM 1% .25 WATT COR- NA55	EA
C022A			R88,R90 COR- NA55	
C023	00003.000	972946-0069	RES FIX 1.5K OHM 5 % .25 W CARBON FILM ROH- R-25	EA
C023A			R4,R77 R32 ROH- R-25	
C025	00002.000	972946-0063	RES FIX 820 OHM 5 % .25 W CARECN FILM ROH- R-25	EA
C025A			R52,R91 ROH- R-25	
C026	00002.000	972946-0037	RES FIX 68.0 OHM 5 % .25 W.CARBON FILM ROH- R-25	EA
C026A			R33,R36 ROH- R-25	
C027	00002.000	972946-0057	RES FIX 470 OHM 5 % .25 W CARECN FILM ROH- R-25	EA
C027A			R34,R35 ROH- R-25	
C028	00002.000	539371-0510	RES FIX FILM 20.0K OHM 1% .13 WATT COR- NC4	EA
C028A			R69,R70 COR- NC4	
C029	00001.000	539370-0427	RES FIX FILM 2.74K OHM 1% .25 WATT COR- NA55	EA
C029	00001.000	539370-0424	RES FIX FILM 2.55K OHM 1% .25 WATT COR-NA55D-100PPM/C	EA
C029A			R11 COR- NA55	
C029A			R11 COR-NA55D-100PPM/C	
C030	00001.000	539370-0429	RES FIX FILM 2.87K OHM 1% .25 WATT COR- NA55	EA
C030	00001.000	539370-0432	RES FIX FILM 3.09K OHM 1% .25 WATT COR- NA55	EA
C030A			R12 COR- NA55	
C030A			R12 COR- NA55	
C031	00001.000	539371-0424	RES FIX FILM 2.55K OHM 1% .13 WATT COR- NC4	EA
C031A			R85 COR- NC4	
C032	00002.000	539371-0490	RES FIX FILM 12.4K OHM 1% .13 WATT COR-NC4-50PPM/C	EA
C032	00002.000	539371-0467	RES FIX FILM 7.15K OHM 1% .13 WATT COR-NC4-50PPM/C	EA
C032A			R47,R49 COR-NC4-50PPM/C	
C032A			R47,R49 COR-NC4-50PPM/C	
C033	00002.000	539371-0481	RES FIX FILM 10.0K OHM 1% .13 WATT COR- NC4	EA
C033A			R2,R80 COR- NC4	
C034	00001.000	539371-0498	RES FIX FILM 15.0K OHM 1% .13 WATT COR- NC4	EA
C034A			R3 COR- NC4	
C034	00003.000	539371-0498	RES FIX FILM 15.0K OHM 1% .13 WATT COR- NC4	EA
C034A			R42,R44,R3 COR- NC4	
C035	00001.000	539370-0419	RES FIX FILM 2.26K OHM 1% .25 WATT COR- NA55	EA
C035	00002.000	539371-0423	RES FIX FILM 2.49K OHM 1% .13 WATT COR-NC4-50PPM/C	EA
C035A			R13 COR- NA55	
C035A			R13,R85 COR-NC4-50PPM/C	
C036	00001.000	539370-0502	RES FIX FILM 16.5K OHM 1% .25 WATT COR- NA55	EA

PART NUMBER	REV	DESCRIPTION
560887-0001	G	MODEM,ATL
560887-0002	G	MODEM,ATL-2
560887-0003	G	MODEM,ATH

ITEM.	QUANTITY.	COMPONENT...	DESCRIPTION	
C036A			R15 COR- NA55	
C037	00001.000	539370-0524	RES FIX FILM 28.0K OHM 1% .25 WATT COR- NA55	EA
C037A			R14 COR- NA55	
0038	00001.000	539370-0356	RES FIX FILM 499 OHM 1% .25 WATT COR- NA55	EA
C038A			R17 COR- NA55	
C039	00003.000	539371-0469	RES FIX FILM 7.50K OHM 1% .13 WATT COR-NC4-50PPM/C	EA
C039	00001.000	539371-0480	RES FIX FILM 9.76K OHM 1% .13 WATT COR- NC4	EA
C039A			R43,R78,R80 COR-NC4-50PPM/C	
C039A			R78 COR- NC4	
0040	00001.000	539371-0462	RES 6.34K OHM 1% .125 WATT FIX FILM COR-NC4-50PPM/C	EA
C040	00001.000	539371-0474	RES FIX FILM 8.45K OHM 1% .13 WATT COR- NC4	EA
C040A			R79 COR-NC4-50PPM/C	
C041	00001.000	539371-0461	RES FIX FILM 6.19K OHM 1% .13 WATT COR- NC4	EA
C041	00001.000	539371-0438	RES FIX FILM 3.57K OHM 1% .13 WATT COR-NC4-50PPM/C	EA
C041A			R48 COR- NC4	
C041A			R48 COR-NC4-50PPM/C	
0042	00001.000	539371-0479	RES FIX FILM 9.53K OHM 1% .13 WATT COR- NC4	EA
0042	00001.000	539371-0491	RES FIX FILM 12.7K OHM 1% .13 WATT COR-NC4-50PPM/C	EA
C042A			R82 COR- NC4	
C042A			R82 COR-NC4-50PPM/C	
C044	00001.000	539370-0574	RES FIX FILM 93.1K OHM 1% .25 WATT COR- NA55	EA
C044A			R19 COR- NA55	
C045	00001.000	539373-0641	RES FIX FILM 464K OHM 1% .375 WATT COR-NA6C-100PPM/C	EA
C045A			R21 COR-NA6C-100PPM/C	
C046	00001.000	539371-0428	RES FIX FILM 2.80K OHM 1% .13 WATT COR-NC4-50PPM/C	EA
C046	00001.000	539371-0430	RES FIX FILM 2.94K OHM 1% .13 WATT COR-NC4-50PPM/C	EA
C046A			R86 COR-NC4-50PPM/C	
C046A			R86 COR-NC4-50PPM/C	
C047	00001.000	539371-0456	RES FIX FILM 5.49K OHM 1% .13 WATT COR-NC4-50PPM/C	EA
0047	00001.000	539371-0468	RES FIX FILM 7.32K OHM 1% .13 WATT COR- NC4	EA
0047A			R83 COR-NC4-50PPM/C	
C047A			R83 COR- NC4	
C048	00001.000	539371-0449	RES FIX FILM 4.64K OHM 1% .13 WATT COR- NC4	EA
0048	00001.000	539370-0452	RES FIX FILM 4.99K OHM 1% .25 WATT COR-NA55D-100PPM/C	EA
C048A			R51 COR- NC4	
C048A			R51 COR-NA55D-100PPM/C	
0049	00001.000	539371-0486	RES FIX FILM 11.3K OHM 1% .13 WATT COR-NC4-50PPM/C	EA
C049A			R8 COR-NC4-50PPM/C	

PART NUMBER	REV	DESCRIPTION
560887-0001	G	MODEM,ATL
560887-000	G	MODEM,ATL-2
560887-0003	G	MODEM,ATH

ITEM.	QUANTITY.	COMPONENT..	DESCRIPTION	
C051	00001.000	539371-0492	RES FIX FILM 13.0K OHM 1% .13 WATT	EA
			COR- NC4	
C051	00001.000	539371-0525	RES FIX FILM 28.7K OHM 1% .13 WATT	EA
			COR-NC4-50PPM/C	
C051A			R72	
			COR- NC4	
C051A			R72	
			COR-NC4-50PPM/C	
C052	00001.000	539370-0504	RES FIX FILM 17.4K OHM 1% .25 WATT	EA
			COR- NA55	
C052	00001.000	539370-0521	RES FIX FILM 26.1K OHM 1% .25 WATT	EA
			COR-NA55D-100PPM/C	
C052A			R73	
			COR- NA55	
C052A			R73	
			COR-NA55D-100PPM/C	
C053	00001.000	539370-0529	RES FIX FILM 31.6K OHM 1% .25 WATT	EA
			COR- NA55	
C053	00001.000	539370-0529	RES FIX FILM 16.9 OHM 1% .25 WATT	EA
			COR-NA55D-100PPM/C	
C053A			R87	
			COR- NA55	
C053A			R87	
			COR-NA55D-100PPM/C	
C054	00002.000	539371-0451	RES FIX FILM 4.87K OHM 1% .13 WATT	EA
			COR-NC4-50PPM/C	
C054	00002.000	539371-0428	RES FIX FILM 2.80K OHM 1% .13 WATT	EA
			COR-NC4-50PPM/C	
C054A			R6,R10	
			COR-NC4-50PPM/C	
C054A			R6,R10	
			COR-NC4-50PPM/C	
C055	00001.000	539795-0009	RES VAR CERMET 5.0 K OHMS 10 % .75 WATT	EA
			BOU-3069P-1-502	
C055	00001.000	539795-0010	RES VAR CERMET 10 K OHMS 10 % .75 WATT	EA
			BOU-3069P-1-103	
C055A			R9	
			BOU-3069P-1-502	
C055A			R9	
			BOU-3069P-1-103	
C056	00003.000	539795-0011	RES VAR CERMET 20 K OHMS 10 % .75 WATT	EA
			BOU-3069P-1-203	
C056A			R53,R56,R76	
			BOU-3069P-1-203	
C057	00001.000	539795-0008	RES VAR CERMET 2.0 K OHMS 10 % .75 WATT	EA
			BOU-3069P-1-202	
C057	00001.000	539795-0007	RES VAR CERMET 1.0 K OHMS 10 % .75 WATT	EA
			BOU-3069P-1-102	
C057A			R7	
			BOU-3069P-1-202	
C057A			R7	
			BOU-3069P-1-102	
C058	00010.000	972929-0369	CAP FIX CERAMIC 27.0 PF 10 % 200 V	EA
			QPL-M39014/01-1369	
C058A			C1,C7,C13,C12,C15,C24,C29,	
			QPL-M39014/01-1369	
C058B			C41,C42,C38	
			QPL-M39014/01-1369	
C059	00001.000	184230-0044	CAPACITOR 0.047 MF	EA
			-PER TI DRAWING	
C059A			C9	
			-PER TI DRAWING	
C060	00010.000	535997-0015	CAP FIX MET POLYCARB .010 MF 1% 50VDCW	EA
			TRW- X463UW	
C060A			C11,C20,C21,C22,C25,C26,C27,	
			TRW- X463UW	
C060B			C28 C34 C23	
			TRW- X463UW	
C061	00002.000	184230-0045	CAPACITOR 0.100 MF	EA
			-PER TI DRAWING	
C061A			C10,C35	
			-PER TI DRAWING	
C062	00003.000	972965-0004	CAP FIX CERAMIC 2200 PF 10% 200V	EA
			QPL- CK06BX222K	
C062A			C17,C31,C43	
			QPL- CK06BX222K	
C063	00002.000	410529-0502	CAP FIX CERAMIC .005 MF GMV 1 KV	EA
			CRL- DD-502	
C063A			C18,C19	
			CRL- DD-502	

PART NUMBER	REV	DESCRIPTION
960887-0001	G	MODEM,ATL
960887-0002	G	MODEM,ATL-2
960887-0003	G	MODEM,ATH

ITEM.	QUANTITY.	COMPONENT..	DESCRIPTION	
0064	00001.000	972943-0002	CAP FIX .033 MF 5% 50V MYLAR METALIZEDT	EA
			TRW- X663F	
C064	00001.000	972943-0005	CAP FIX .056 MF 5% 50V MYLAR METALIZED	EA
			TRW- X663F	
C064A			C30	
			TRW- X663F	
C064A			C30	
			TRW- X663F	
C065	00002.000	535997-0021	CAPACITOR .03300 MF 50V 1.%	EA
			TRW-X463UW	
C065A			C37,C40	
			TRW-X463UW	
C066	00002.000	972929-0397	CAP FIX CERAMIC .001 UF 10% 200V	EA
			QPL-M39014/01-1397	
C066A			C32,C33	
			QPL-M39014/01-1397	
C067	00001.000	535997-0020	CAP FIX MET POLYCARB .027 MF 1% 50VDCW	EA
			TRW- X463UW	
C067A			C8	
			TRW- X463UW	
0068	00002.000	535997-0029	CAP FIX MET POLYCARB .120 MF 1% 50VDCW	EA
			TRW- X463UW	
C068A			C36,C39	
			TRW- X463UW	
C069	00001.000	972924-0015	CAP FIX TANT SOLID 47 MFD 10 % 20 VOLT	EA
			QPL-M39003/1-2295	
C069A			C44	
			QPL-M39003/1-2295	
0070	00001.000	972924-0009	CAP FIX TANT SOLID 3.3 MFD 10 % 15 VOLT	EA
			QPL-M39003/1-2268	
C070A			C2	
			QPL-M39003/1-2268	
C071	00002.000	419C51-0222	CAP FIX FILM FOIL .0022 UF 5% 200VDC	EA
			TRW- 663UW	
C071	00002.000	230516-0001	CAP .C03900 MF 100V 05	EA
			TRW-663UW	
C071A			C14 C16	
			TRW- 663UW	
C071A			C14,C16	
			TRW-663UW	
C072	00029.000	972965-0024	CAP FIX CERAMIC .100 MF 10% 100V	EA
			QPL- CK06BX104K	
C072A			C45 THRU C49,C51 THRU C64,	
			QPL- CK06BX104K	
C072B			C66,C68 THRU C76	
			QPL- CK06BX104K	
C073	00002.000	972924-0016	CAP FIX TANT SOLID 100 MFD 10 % 20 VOLT	EA
			QPL-M39003/1-2301	
C073A			C3 C4	
			QPL-M39003/1-2301	
C074	00002.000	972924-0010	CAP FIX TANT SOLID 22 MFD 10 % 15 VOLT	EA
			QPL-M39003/1-2271	
C074A			C5,C6	
			QPL-M39003/1-2271	
C075	00002.000	538429-0020	COIL RF 220 UH 7.5 OHM 103 MA LT10K	EA
			QPL- MS90538-20	
C075A			L3,L4	
			QPL- MS90538-20	
C076	00002.000	538428-0004	COIL RF 10.0 UH .90 OHM 290 MA LT10K131	EA
			QPL- MS14046-04	
C076A			L1,L2	
			QPL- MS14046-04	
C077	00012.000	972932-0001	DIODE,1N914B SWITCHING 75V P1V 75MA 4NS	EA
			TI - IN914B	
C077A			CR1,CR2,CR9,CR10,CR11,CR12	
			TI - IN914B	
C077B			CR13 CR16 CR18 CR19 CR20 CR3	
			TI - IN914B	
C078	00002.000	231768-5806	DICDE-ZENER	EA
			UNT-UZ5806	
C078A			CR7,CR8	
			UNT-UZ5806	
C080	00001.000	231784-0001	DICDE MPD300 3 PELLET SILICON MULTI	EA
			GE -MPD300	
C080A			CR17	
			GE -MPD300	
C082	00002.000	244547-0001	DIODE ASSY,ZENER,MATCHED PAIR 1N752A	EA
			1210-4547-029	
C082A			(CR14&CR15)(CR4&CR5)	
			1210-4547-029	

PART NUMBER	REV	DESCRIPTION
960887-0001	G	MODEM,ATL
960887-0002	G	MODEM,ATL-2
960887-0003	G	MODEM,ATH

ITEM.	QUANTITY.	COMPONENT..	DESCRIPTION	
C083	00001.000	248490-5245	XST,HI-RELBL N-CHAN FET SKA5729 NKL LEAD	EA
C083A			Q8	
C084	00001.000	248490-0073	XST,HI-RELBL N-CHAN FET SKA5731 NKL LEAD	EA
C084A			Q5	
C085	00005.000	972958-0002	TRANSISTOR,2N2907A PNP GEN PURP SW TO-18 TI - 2N2907A	EA
C085A			Q4,Q6,Q10,Q11,Q12 TI - 2N2907A	
C086	00001.000	972955-0001	TRANSISTOR, NPN,HIGH SPEED SW TO-18 MOT- 2N2369A	EA
C086A			Q5 MOT- 2N2369A	
C087	00001.000	972948-0002	TRANSISTOR,2N2222A NPN GEN PURP SW TO-18 TI - 2N2222A	EA
C087A			Q7 TI - 2N2222A	
C088	00001.000	222225-0311	NETWORK LM311H	EA
C088A			AR9	
C089	00014.000	222224-0010	NETWORK LM301AH OPERATIONAL AMP -LM301AH	EA
C089A			AR1,AR3,AR4,AR5,AR6,AR7,AR8, -LM301AH	
C089B			AR10,AR11,AR12,AR13,AR14, -LM301AH	
C089C			AR15,AR16 -LM301AH	
C090	00001.000	772500-0001	TRANSFORMER,AUDIO ISLN 600CT/600CT IMPD TRL-LJ011	EA
C090A			T1 TRL-LJ011	
C091	00001.000	419576-0003	JACK,TIP BLACK EFJ-105-853	EA
C091A			TP1 J1 EFJ-105-853	
C092	00001.000	232164-0000	JACK TIP WHITE EFJ-105-851 419-976-0001	EA
C092A			TP2 J2 419-976-0001	
C093	00001.000	232165-0000	JACK TIP RED EFJ-105-852 419-976-0002	EA
C093A			TP3 J3 419-976-0002	
C094	00015.000	232583-0005	PAD INTEGRATED CKT.TO-5 8 LEADS .350 DIA THR-7717-107-N-WHT	EA
C095	00001.000	539370-0538	RES FIX FILM 39.2K OHM 1% .25 WATT COR- NA55	EA
C095A			R39 COR- NA55	
C096	00009.000	185113-0001	SPACER XST TO-18 CASE * -	EA
C097	00001.000	535997-0012	CAP FIX MET POLYCARB .0056 MF 1% 50VDCW TRW- X463UW	EA
C097A			C11 TRW- X463UW	
C098	00002.000	539371-0471	RES FIX FILM 7.87K OHM 1% .13 WATT COR- NC4	EA
C098A			R42,R44 COR- NC4	
C099	00002.000	230499-0075	CAP .00220 MF 50V 5.% TRW-601PE-222-5-.5-W2	EA
C099A			C77,C78 TRW-601PE-222-5-.5-W2	
C105	REF	962324-9901	PROGRAM TEST,CONT/REG-14AMP	EA
C106	REF	959195-9901	DIAGRAM,ELECT.SCHEM.ELTN-MODEM ATL	EA
0108	3.0	538135-0433	CAP. 0.100 MF C50, C65, C67	
C109	00001.000	972059-0001	RESISTOR,VARIABLE 20K OHM CERMET FILM BOU- 3006W-1-203	EA
0109A			R18 BOU- 3006W-1-203	

NOTES:
1. MAXIMUM COMPONENT HEIGHT FROM COMPONENT SIDE OF BOARD IS .480
2. MAXIMUM COMPONENT HEIGHT FROM CONDUCTOR SIDE OF BOARD IS .500
3. MAXIMUM LEAD LENGTH FROM CONDUCTOR SIDE OF BOARD IS .062
5 SOLDER RIVET TO BOARD CONDUCTOR (CONDUCTOR SIDE) AND TERMINAL (COMPONENT SIDE)
6. INSTALL FUSES (ITEMS 7&8) AFTER SOLDERING AND CLEANING
7 INSTALL TIE-RAP (ITEM 12) NEAREST CONNECTOR 1.5±.25 INCHES FROM CONNECTOR HOUSING
WIRE NO. START FINISH
1 P10-1 E7
2 P10-2 E8
3 P10-3 E12
4 P10-4 E9
5 P10-5 E10
6 P10-6 E13
7 P10-7 E6
8 P10-8 E11
9 P10-9 E14
REVISIONS
1) REVISED SIDE VIEW PICTORIALLY SHOWING WIRES BEING INSERTED THRU THE HOLES ON THE BOARD
2) ADDED CALLOUT FOR ITEMS 13 & 14 TO F/D IN A-6
3) ADDED CALLOUT FOR NOTE 7 IN A-8
4) ADDED NOTE 7 TO F/D
5) ADDED ITEMS 13 & 14 TO LM
CONDUCTOR SIDE
COMPONENT SIDE
E6
E7
E8
E9
E10
E11
E12
E13
E14
STRAIN RELIEF TO BE MAINTAINED ON ALL WIRES
CR1
CR2
CR3
CR4
CR5
CR6
CR7
E1
E2
E3
E4
E5
E15
F2
F3
F4
SERIAL NO.
ASSY NO. 960889-0001
DIAGRAM NO 959200
MADE IN U.S.A.
6 PLACES
MARK APPROPRIATE REV LETTER PER PROCESS 2
3 PLACES
VIEW A-A
CABLE INSTALLED CONDUCTOR SIDE AFTER PROCESS 1
P10
PROCESSES:
1. WAVE SOLDER F-124 AND/OR SOLDER PER F-127
2. RUBBER STAMP PER F-100, HEIGHT .09, COLOR BLACK
PWB 960888
SCHEMATIC-DIAGRAM FOR-0001 ASSY (959200-9001)
ASSEMBLY
REV LEVEL
PARTS LIST
TEXAS INSTRUMENTS
RECTIFIER BOARD ASSY
D 96214 960889
LM

PART NUMBER REV DESCRIPTION.....
0960889-0001 N RECTIFIER BOARD ASSY

ITEM.	QUANTITY.	COMPONENT..	DESCRIPTION.....	UM
0001	00001.000	0960888-0001	PRINTED WIRING BD.RECTIFIER W/O HDW 1209-0888-000	EA
0003	00004.000	0972164-0004	DIODE,MR506/UT1060A-3A 600V SILICONE	EA
0003A			CR2 CR5 CR6 CR7	
0004	00001.000	0772493-0001	BRIDGE 655-196 MAGNUM HIGH CURRENT SEE - T- DRAWING	EA
0004A			CR1 SEE - T- DRAWING	
0005	00002.000	0231678-0001	DIODE IN645A - I-645A	EA
0005A			CR3,CR4 QPL - 1-645	
0007	00002.000	0416434-0303	FUSE 3.0 A 250V 3AG LIT - 3-2003	EA
0007A			F3 F4 LIT - 3-2003	
0008	00001.000	0416434-0803	FUSE 8.0 A 125V 3AG BUS - G-H 8	EA
0008A			F2 BUS - G-H 8	
0009	00001.000	0959381-0001	CABLE ASSY,A.C POWER ASSY 1209-9381-040	EA
0010	REF	0959200-9901	DIAGRAM,SCHEMATIC-AC PWR.ASSY	EA
0011	00006.000	0772635-0001	CLIP,FUSE LIT - 10-068	EA
0012	00003.000	0418212-0040	STRAP,TIEDOWN,ADJUSTABLE,PLASTIC QPL - M-3367-4-9	EA
0013	00001.000	0085936-0016	EYELET .121 BARREL OD X.156 LG FLANGE USM - #-E-45	EA
0014	00001.000	0772458-0001	TAB,2-SIDE QUICK CONNECT-DISCONNECT KUL - KT-0	EA

168096

NOTES UNLESS OTHERWISE SPECIFIED

1) DO NOT CLINCH COMPONENT LEADS
2) DO NOT SOLDER ON COMPONENT SIDE
3) MASK ALL CONNECTOR FINGERS ON BOTH SIDES OF BOARD WHEN SOLDERING TO PREVENT SOLDER FROM WICKING DOWN CONNECTOR FINGERS
4) EJECTORS (ITEMS 3 AND 4) ARE TO BE INSTALLED AFTER WAVE SOLDERING
5) MAXIMUM COMPONENT HEIGHT FROM COMPONENT SIDE OF BOARD IS .375
6) MAXIMUM LEAD LENGTH FROM CONDUCTOR SIDE OF BOARD IS .062
7) INSTALL R1 THRU R12 AFTER WAVE SOLDERING

LTR	DESCRIPTION	DATE	APPD
A	380995 (B) d Pierce 2-27-73	7/27/73	[illegible]

1) ITEM 4 WAS P/N 231802-0005, COLOR GRN

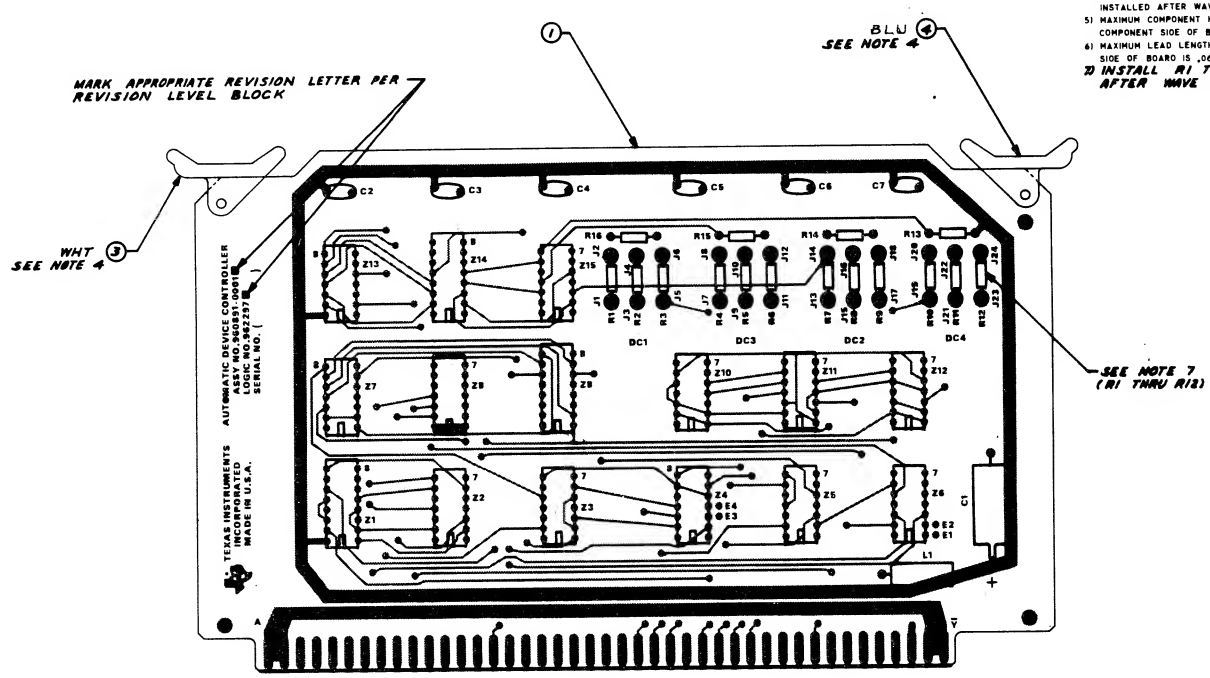

LIST OF MATERIALS

QTY REQD	PART NUMBER	DESCRIPTION	VENDOR PART NUMBER
0002 0001			

PROCESSES	PROJ NO	SIZE	NEXT ASSY DWG NO
1. WAVE SOLDER, F-124 AND (OR) SOLDER PER F-127	8726	D	960970
	8726	D	960971
2. RUBBER STAMP, F-100, HEIGHT .02, COLOR BLACK	8726	D	960972
	8726	D	960973

UNLESS OTHERWISE SPECIFIED
DECIMAL .XX .02 .XXX .010
FRACTIONAL ± 64 ANGULAR ±
CONCENTRICITY MACHINED DIAMETERS .004 TIR
ALL DIMENSIONS TO BE MET BEFORE PLATING
REMOVE ALL BURRS AND SHARP EDGES
DO NOT SCALE THIS DRAWING
ALL DIMENSIONS IN INCHES
SURFACES MARKED ✓ TO HAVE ✓
DRILLED HOLE TOLERANCES
.013 TO .136 .002 .003 .136 TO .250 .005 .003
.250 AND ABOVE .005

TEXAS INSTRUMENTS INCORPORATED INDUSTRIAL PRODUCTS DIVISION HOUSTON TEXAS

TITLE AUTOMATIC DEVICE CONTROLLER
UNIT TERMINAL ASSEMBLY
SYSTEM 700 ASR
SCALE 2/1 D 960891 A

REVISION LEVEL
LOGIC DIAGRAM FOR -0001 ASSY (962297 -0001)
ASSEMBLY

PART NUMBER	REV	DESCRIPTION.....
0960891-0001	A	AUTOMATIC DEVICE CONTROLLER

ITEM.	QUANTITY.	COMPONENT..	DESCRIPTION.....	UM
0001	00001.000	0960890-0001	PW BOARD,AUTOMATIC DEVICE CONTROLLER 1209-0890-000	EA
0003	00001.000	0413277-0001	EJECTOR,PCB,NON-LOCKING,WHITE SCA - S--00(NATURAL)	EA
0004	00001.000	0413277-0011	EJECTOR,PCB,NON-LOCKING,R.BLUE SCA - S--00(R.BLUE	EA
0006	00001.000	0538433-0001	COIL RF 5.60 UH .13 OHM 885 MA LT10K158 QPL - M-90542-14	EA
0006A			L1 QPL - M-90542-14	
0007	00001.000	0972924-0012	CAP FIX TANT SOLID 150 MFD 10 % 15 VOLT QPL - M3-003/1-2277	EA
0007A			C1 QPL - M3-003/1-2277	
0008	00006.000	0532736-0002	CAP FIX CERAMIC .02 MF 20/80% 25 VOLT CRL - 2-0U60E203ZAC	EA
0008A			C2 THRU C7 CRL - 2-0U60E203ZAC	
0010	00001.000	0222222-7400	NETWORK SN7400N - 3-000	EA
0010A			Z3 - 3-000	
0011	00001.000	0222222-7402	NETWORK SN7402N TI- - SN-402N	EA
0011A			Z15 TI- - SN-402N	
0012	00003.000	0222222-7403	NETWORK SN7403N	EA
0012A			Z10,Z11,Z12	
0013	00002.000	0222222-7404	NETWORK SN7404N	EA
0013A			Z5,Z6	
0014	00001.000	0222222-7405	NETWORK SN7405N	EA
0014A			Z4	
0015	00001.000	0222222-7408	NETWORK-SN7408N	EA
0015A			Z2	
0016	00001.000	0222222-7427	NETWORK SN7427N TI- - SN-427N	EA
0016A			Z7 TI- - SN-427N	
0017	00001.000	0222222-7442	NETWORK-SN7442N	EA
0017A			Z14	
0018	00001.000	0222222-7474	NETWORK SN7474N - 3-000	EA
0018A			Z8 - 3-000	
0019	00001.000	0222222-7164	NETWORK SN74164N TI- - SN-4164N	EA
0019A			Z13 TI- - SN-4164N	
0020	00001.000	0222222-7174	NETWORK SN74174N	EA
0020A			Z1	
0021	00001.000	0222222-7175	NETWORK SN74175N	EA
0021A			Z9	
0022	00001.000	0539493-0001	RECEPTACLE ACCEPTS LEAD SIZE.018-.040GLD AMP - 1--80737-0	EA
0022A			J1 THRU J24 AMP - 1--80737-0	
0023	00001.000	0972946-0017	RES FIX 10.0 OHM 5 % .25 W.CARBON FILM ROH - R-25	EA
0023A			R1 THRU P12 ROH - R-25	
0024	00001.000	0972946-0072	RES FIX 2.0K OHM 5 % .25 W CARBON FILM ROH - R-25	EA
0024A			R13 THRU R16 ROH - R-25	
0025	REF	0962297-9901	DIAGRAM,LOGIC DET-AUTO DEVICE CONTROLLER	EA
0026	REF	0960993-9901	PROGRAM TEST,AUTO DEVICE CONTROLLER	EA

106096 a

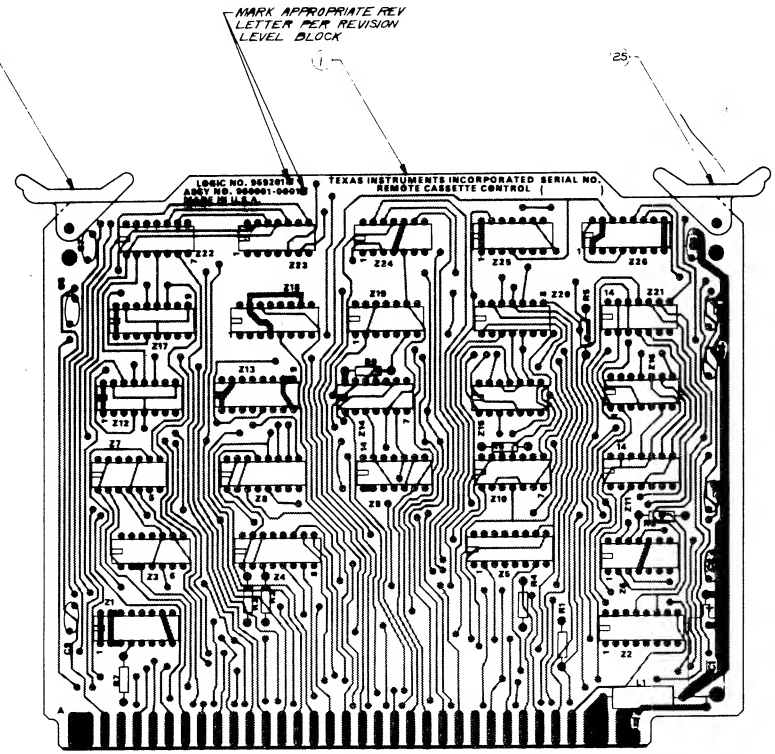

NOTES UNLESS OTHERWISE SPECIFIED

1) DO NOT CLINCH COMPONENT LEADS
2) DO NOT SOLDER ON COMPONENT SIDE
3) MASK ALL CONNECTOR FINGERS ON BOTH SIDES OF BOARD WHEN SOLDERING TO PREVENT SOLDER FROM WICKING DOWN CONNECTOR FINGERS
4) EJECTORS (ITEMS 21 AND 25) ARE TO BE INSTALLED AFTER WAVE SOLDERING
5) MAXIMUM COMPONENT HEIGHT FROM COMPONENT SIDE OF BOARD IS .325
6) MAXIMUM LEAD LENGTH FROM CONDUCTOR SIDE OF BOARD IS .080

REVISIONS

LTR	DESCRIPTION	DATE	APPD
D	372903 (C) [illegible] 8-8-72 REDRAWN W/CHGS, ITEM 26 ADDED TO LM	8/10/72	[illegible]
E	381171 (B) [illegible] 5-18-73 UPDATED REV LEVEL STATUS BLOCK	5-18-73	[illegible]
F	396620 (D) [illegible] 8-15-74 1) UPDATED REV LEVEL BLOCK. 2) ON LM, CHANGED ITEM 3, WAS P/N 230906-0000, QTY 1.	8/10/74	[illegible]
G	CN420109 [illegible] NOTE 5, .325 WAS .375 (2) NOTE 6, .080 WAS .062	5-20-78	[illegible]

LIST OF MATERIALS

QTY REQD	PART NUMBER	DESCRIPTION	VENDOR PART NUMBER
1	WAVE SOLDER, F-124		
2	RUBBER STAMP, F-100, HEIGHT .09, COLOR BLACK		

PROJ NO	SIZE	NEXT ASSY DWG NO
8726	D	959389

UNLESS OTHERWISE SPECIFIED
DECIMAL .XX ± .02 .XXX ± .010
FRACTIONAL ± 1/64 ANGULAR ± 1°
CONCENTRICITY MAX INCL DIAMETER
ALL DIMENSIONS TO BE MET AFTER PLATING
REMOVE ALL BURRS AND SHARP EDGES
DO NOT SCALE THIS DRAWING
ALL DIMENSIONS IN INCHES
SURFACES MARKED ✓ TO HAVE
SPILLED HOLE TOLERANCES
.013 TO .136 ± .003 .131 TO .250 ± .005 .003
.250 AND ABOVE ± .005

DRAFTSMAN 8-8-72
CHECKED 8/10/72
DESIGN ENGINEER 8/10/72
ENGINEER 8/10/72
[illegible] 8/10/72

TEXAS INSTRUMENTS INCORPORATED
INDUSTRIAL PRODUCTS DIVISION
HOUSTON TEXAS

TITLE REMOTE CASSETTE CONTROL
CASSETTE ASSY
700 ASR

SIZE D 960901

REVISION LEVEL

PWB (960900-0001)
LOGIC DIAGRAM FOR -0001 ASSY (959201-0001)
ASSEMBLY

PART NUMBER	REV	DESCRIPTION
0960901-0001	G	REMOTE CASSETTE CONTROL

ITEM.	QUANTITY.	COMPONENT..	DESCRIPTION	UM
0001	00001.000	0960900-0001	PW BOARD,REMOTE CASSETTE CONTROL	EA
			1209-0900-000	
0002	00008.000	0532736-0002	CAP FIX CERAMIC .02 MF 20/80% 25 VOLT	EA
			CRL - 2-DU60E203ZAC	
0002A			C2 THRU C9	
			CRL - 2-DU60E203ZAC	
0003	00001.000	0972924-0011	CAP FIX TANT SOLID 68 MFD 10 % 15 VOLT	EA
			QPL - M3-003/1-2274	
0003A			C1	
			QPL - M3-003/1-2274	
0004	00001.000	0538433-0001	COIL RF 5.60 UH .13 OHM 885 MA LT10K158	EA
			QPL - M-90542-14	
0004A			L1	
			QPL - M-90542-14	
0005	00001.000	0222222-7400	NETWORK SN7400N	EA
			- 3-000	
0005A			Z10	
			- 3-000	
0006	00001.000	0222222-7402	NETWORK SN7402N	EA
			TI- - SN-402N	
0006A			Z21	
			TI- - SN-402N	
0007	00001.000	0222222-7403	NETWORK SN7403N	EA
0007A			Z19	
0008	00002.000	0222222-7404	NETWORK SN7404N	EA
0008A			Z20,Z23	
0010	00001.000	0222222-7437	NETWORK SN7437N	EA
0010A			Z15	
0011	00002.000	0222222-7451	NETWORK SN7451N	EA
			- SN-451N	
0011A			Z9,Z22	
			- SN-451N	
0012	00002.000	0222222-7454	NETWORK SN7454N	EA
			- SN-454N	
0012A			Z3,Z7	
			- SN-454N	
0013	00002.000	0222222-7474	NETWORK SN7474N	EA
			- 3-000	
0013A			Z6,Z24	
			- 3-000	
0014	00002.000	0222222-7497	NETWORK SN7497N	EA
0014A			Z1,Z2	
0015	00002.000	0222222-7107	NETWORK SN74107N	EA
0015A			Z11,Z16	
0016	00002.000	0222222-7156	NETWORK-SN74156N	EA
0016A			Z4,Z8	
0017	00001.000	0222222-7175	NETWORK SN74175N	EA
0017A			Z5	
0018	00004.000	0222222-7191	NETWORK SN74191N	EA
0018A			Z12,Z13,Z17,Z18	
0019	00001.000	0222222-7193	NETWORK SN74193N	EA
			- SN-4193N	
0019A			Z26	
			- SN-4193N	
0020	00001.000	0222222-7164	NETWORK SN74164N	EA
			TI- - SN-4164N	
0020A			Z25	
			TI- - SN-4164N	
0021	00001.000	0533887-0003	EJECTOR,PCB,NON-LOCKING,BLACK	EA
			SCA - S--02 BLACK	
0022	00001.000	0222222-7432	NETWORK SN7432N	EA
			- SN-432N	
0022A			Z14	
			- SN-432N	
0023	REF	0959201-9901	DIAGRAM,LOGIC DET-REMOTE CASSETTE CONT	EA
0024	00009.000	0972946-0072	RES FIX 2.0K OHM 5 % .25 W CARBON FILM	EA
			ROH - R-25	
0024A			R1 THRU R9	
			ROH - R-25	
0025	00001.000	0533887-0007	EJECTOR,PCB,NON-LOCKING,ORANGE	EA
			SCA - S--02 ORANGE	
0026	REF	0960987-9901	PROGRAM TEST,REMOTE CASSETTE CONTROL	EA

NOTES UNLESS OTHERWISE SPECIFIED

1) DO NOT CLINCH COMPONENT LEADS
2) DO NOT SOLDER ON COMPONENT SIDE
3) MASK ALL CONNECTOR FINGERS ON BOTH SIDES OF BOARD WHEN SOLDERING TO PREVENT SOLDER FROM WICKING DOWN CONNECTOR FINGERS
4) EJECTORS (ITEMS 2 AND 5) ARE TO BE INSTALLED AFTER WAVE SOLDERING
5) MAXIMUM COMPONENT HEIGHT FROM COMPONENT SIDE OF BOARD IS .375
6) MAXIMUM LEAD LENGTH FROM CONDUCTOR SIDE OF BOARD IS .062
7) RESISTORS (R2 R4 R6 & R8) USED ON -0001 ASSY ONLY: RESISTORS (R1, R3, R5 & R7) USED ON -0002 ASSY ONLY

REVISIONS

LTR	DESCRIPTION	DATE	APPD
E	372891(C) D 9-4-72 REDRAWN W/CHG'S PER REDESIGN	9/10/72	
F	381343 (D) 9-7-73 1) ON LM & P/D -0001 WAS "RECORD BUFFER CONTROL-300 BAUD".	9/12/73	
G	393771 D 8-1-73 1. ON LM -0001 & -0002 IT. 10 PN WAS 772846- 2. UPDATED REVISION STATUS BLOCK	8/24	

DESCRIPTION	PART NUMBER
RECORD BUFFER CONTROL-BAUDOT	960903-0002
RECORD BUFFER CONTROL-ASCII	960903-0001

LIST OF MATERIALS

1 WAVE SOLDER F-124
2 RUBBER STAMP F-100, HEIGHT .09 COLOR BLACK

8726 D 959382

PRINTED WIRING BOARD (960902-0001)					E	
LOGIC DIAGRAM FOR -0002 ASSY (959202-9901)	*	*	*	A	B	C
LOGIC DIAGRAM FOR -0001 ASSY (959202-9901)	*	*	*	A	B	C
ASSEMBLY	A	B	C	D	E	F	G

REVISION LEVEL

TEXAS INSTRUMENTS INCORPORATED INDUSTRIAL PRODUCTS DIVISION

RECORD BUFFER CONTROL CASSETTE ASSY

700 ASR

D 960903 G

PART NUMBER	REV	DESCRIPTION
960903-0001	G	RECORD BUFFER CONTROL-ASCII
960903-0002		

ITEM.	QUANTITY.	COMPONENT..	DESCRIPTION	UM
C001	00001.000	960902-0001	PC BOARD,RECORD BUFFER CONTROL 1209-0902-000	EA
C002	00001.000	231802-0110	EJECTOR,PC BD BLACK SCA-S-202 533-887-0003 18677	EA
0003	00001.000	222222-7402	NETWORK SN7402N TI--SN7402N	EA
0003A			Z5 TI--SN7402N	
0004	00001.000	222222-7400	NETWORK SN7400N - 3-000	EA
0004A			Z12 - 3-000	
0005	00001.000	231802-0105	EJECTOR,PC BD GREEN SCA-S-202 533-887-0009 18677	EA
C006	00002.000	222222-7404	NETWORK SN7404N	EA
0006A			Z10,Z22	
C007	00001.000	222222-7408	NETWORK-SN7408N	EA
0007A			Z1	
0008	00001.000	222222-7410	NETWORK SN7410N - 3-000	EA
0008A			Z15 - 3-000	
0009	00001.000	222222-7420	NETWORK SN7420N -SN7420N	EA
0009A			Z7 -SN7420N	
0011	00001.000	222222-7451	NETWORK SN7451N -SN7451N	EA
0011A			Z11 -SN7451N	
0012	00001.000	222222-7474	NETWORK SN7474N - 3-000	EA
0012A			Z16 - 3-000	
0013	00001.000	222222-7492	NETWORK-SN7492N	EA
0013A			Z17	
0014	00002.000	222222-7157	NETWORK SN74157N	EA
0014A			Z18,Z19	
0015	00002.000	222222-7164	NETWORK SN74164N TI--SN74164N	EA
0015A			Z2,Z6 TI--SN74164N	
0016	00003.000	222222-7175	NETWORK SN74175N	EA
0016A			Z3,Z4,Z20	
0017	00004.000	222222-7193	NETWORK SN74193N -SN74193N	EA
0017A			Z8,Z9,Z13,Z14 -SN74193N	
0018	00001.000	222222-7197	NETWORK SN74197N	EA
0018A			Z21	
0019	00004.000	219402-7201	NETWORK SN74S201N	EA
0019A			Z23 THRU Z26	
0020	00011.000	230561-0000	CAP .02000 MF 25V 80/-20 % ERI-5835Y5U203Z	EA
0020A			C2 C3 C5 THRU C13 ERI-5835Y5U203Z	
0021	00001.000	230906-0000	CAP 150.000 MF 15V 10% CASE SIZE D MIL-CS13BD157K	EA
0021A			C1 MIL-CS13BD157K	
0022	00001.000	418093-0010	COIL 5.60 UH .13 OHMS 10% MIL-MS90542-14	EA
0022A			L1 MIL-MS90542-14	
0023	REF	959202-9901	DIAGRAM,LOGIC DET-RECORD BUFFER CONTROL	EA
0024	00002.000	233869-0000	RES 2000.0 OHM .25W 5. AR -CR2025	EA
0024A			R9 R10 AR -CR2025	
0025	00004.000	233221-0000	RES 10.000 OHM .25W 5. AR -CR1005	EA
0025A			R2,R4,R6,R8 AR -CR1005	
0027	00001.000	222222-7165	NETWORK SN74165N	EA
0027A			Z27	

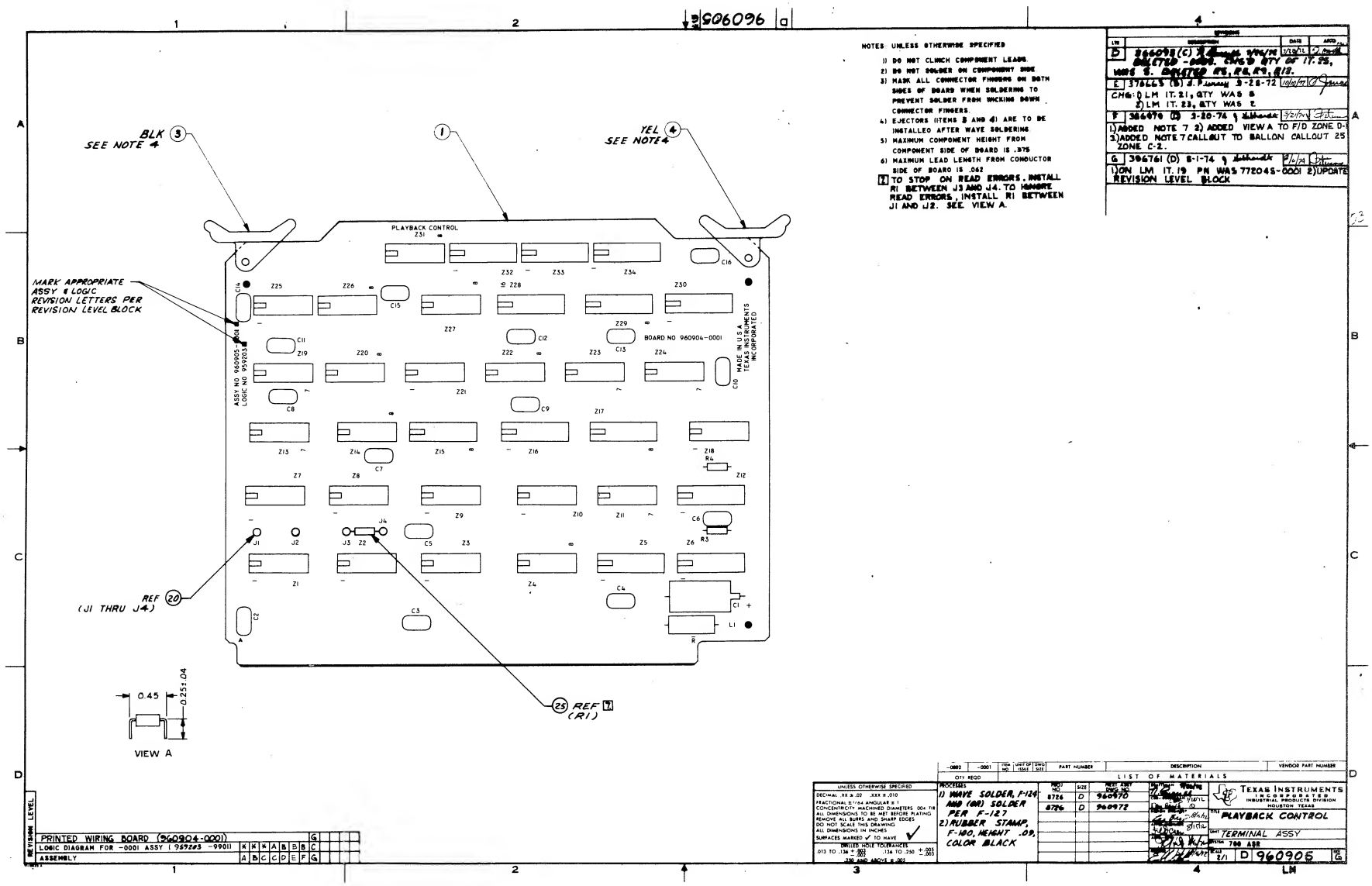

BLK 3 SEE NOTE 4
1
YEL 4 SEE NOTE 4
MARK APPROPRIATE ASSY & LOGIC REVISION LETTERS PER REVISION LEVEL BLOCK
PLAYBACK CONTROL
BOARD NO 960904-0001
ASSY NO 960905-0001
LOGIC NO 959203
MADE IN U.S.A. TEXAS INSTRUMENTS INCORPORATED
REF 20 (J1 THRU J4)
25 REF 7 (R1)
0.45
0.25±.04
VIEW A
NOTES: UNLESS OTHERWISE SPECIFIED
1) DO NOT CLINCH COMPONENT LEADS.
2) DO NOT SOLDER ON COMPONENT SIDE
3) MASK ALL CONNECTOR FINGERS ON BOTH SIDES OF BOARD WHEN SOLDERING TO PREVENT SOLDER FROM WICKING DOWN CONNECTOR FINGERS.
4) EJECTORS (ITEMS 3 AND 4) ARE TO BE INSTALLED AFTER WAVE SOLDERING
5) MAXIMUM COMPONENT HEIGHT FROM COMPONENT SIDE OF BOARD IS .375
6) MAXIMUM LEAD LENGTH FROM CONDUCTOR SIDE OF BOARD IS .062
7 TO STOP ON READ ERRORS, INSTALL R1 BETWEEN J3 AND J4. TO IGNORE READ ERRORS, INSTALL R1 BETWEEN J1 AND J2. SEE VIEW A.
REVISIONS
LTR DESCRIPTION DATE APPD
D 366093 (C) 3/28/72 DELETED -0002. CHG'D QTY OF IT. 25, WAS 5. DELETED R5, R6, R9, R12.
E 376665 (B) J. Pierson 3-28-72 10/10/72
CHG: 1) LM IT. 21, QTY WAS 8
2) LM IT. 23, QTY WAS 2
F 366970 (D) 3-20-74 3/21/74
1) ADDED NOTE 7 2) ADDED VIEW A TO F/D ZONE D-1
3) ADDED NOTE 7 CALLOUT TO BALLON CALLOUT 25 ZONE C-2.
G 306761 (D) 8-1-74 8/6/74
1) ON LM IT. 19 PN WAS 772045-0001 2) UPDATE REVISION LEVEL BLOCK
-0002 -0001 ITEM NO UNIT OF ISSUE DWG SIZE PART NUMBER DESCRIPTION VENDOR PART NUMBER
QTY REQD
LIST OF MATERIALS
PROCESSES
1) WAVE SOLDER, F-124 AND (OR) SOLDER PER F-127
2) RUBBER STAMP, F-100, HEIGHT .09, COLOR BLACK
PROJ NO. SIZE NEXT ASSY DWG NO.
8726 D 960970
8726 D 960972
UNLESS OTHERWISE SPECIFIED
DECIMAL .XX ± .02 .XXX ± .010
FRACTIONAL ± 1/64 ANGULAR ± 1
CONCENTRICITY MACHINED DIAMETERS .004 TIR
ALL DIMENSIONS TO BE MET BEFORE PLATING
REMOVE ALL BURRS AND SHARP EDGES
DO NOT SCALE THIS DRAWING
ALL DIMENSIONS IN INCHES
SURFACES MARKED ✓ TO HAVE
DRILLED HOLE TOLERANCES
.013 TO .136 +.003 -.005 .136 TO .250 +.005 -.003
.250 AND ABOVE ± .005
TEXAS INSTRUMENTS INCORPORATED INDUSTRIAL PRODUCTS DIVISION HOUSTON TEXAS
TITLE PLAYBACK CONTROL
UNIT TERMINAL ASSY
SYSTEM 700 ASR
SCALE 2/1
D 960905
REVISION LEVEL
PRINTED WIRING BOARD (960904-0001) G
LOGIC DIAGRAM FOR -0001 ASSY (959203 -9901) C
ASSEMBLY A B C C D E F G

PART NUMBER	REV	DESCRIPTION.....
960905-0081	G	PLAYBACK CONTROL

ITEM.	QUANTITY.	COMPONENT..	DESCRIPTION.....	UM
0001	00001.000	960904-0001	PB BOARD,PLAYBACK CONTROL	EA
			1209-0904-000	
0002	00002.000	233869-0088	RES 2000.0 OHM .25W 5.	EA
			AB -CB2025	
0002A			R3,R4	
			AB -CB2025	
0003	00001.000	231802-0110	EJECTOR,PC BD BLACK SCA-S-202	EA
			533-887-0003 18677	
0004	00001.000	231802-0104	EJECTOR,PC BD YELLOW SCA-S-202	EA
			533-887-0019 18677	
0005	00004.000	222222-7400	NETWORK SN7400N	EA
			- 3-000	
0005A			Z9,Z13,Z20,Z23	
			- 3-000	
0006	00004.000	222222-7402	NETWORK SN7402N	EA
			TI--SN7402N	
0006A			Z1,Z2,Z11,Z27	
			TI--SN7402N	
0007	00001.000	222222-7403	NETWORK SN7403N	EA
0007A			Z3	
0008	00003.000	222222-7404	NETWORK SN7404N	EA
0008A			Z4,Z14,Z18	
0009	00002.000	222222-7410	NETWORK SN7410N	EA
			- 3-000	
0009A			Z7,Z21	
			- 3-000	
0010	00001.000	222222-7420	NETWORK SN7420N	EA
			-SN7420N	
0010A			Z26	
			-SN7420N	
0011	00001.000	222222-7425	NETWORK SN7425N	EA
0011A			Z25	
0012	00001.000	222222-7427	NETWORK SN7427N	EA
			TI--SN7427N	
0012A			Z10	
			TI--SN7427N	
0013	00002.000	222222-7451	NETWORK SN7451N	EA
			-SN7451N	
0013A			Z22,Z24	
			-SN7451N	
0014	00002.000	222222-7474	NETWORK SN7474N	EA
			- 3-000	
0014A			Z8,Z19	
			- 3-000	
0015	00001.000	222222-74164	NETWORK SN74164N	EA
			TI--SN74164N	
0015A			Z31	
			TI--SN74164N	
0016	00001.000	222222-74166	NETWORK SN74166N	EA
0016A			Z5	
0017	00004.000	222222-74175	NETWORK SN74175N	EA
0017A			Z15,Z16,Z17,Z28	
0018	00004.000	222222-74193	NETWORK SN74193N	EA
			-SN74193N	
0018A			Z6,Z12,Z29,Z30	
			-SN74193N	
0019	00003.000	219402-7201	NETWORK SN74S201N	EA
0019A			Z32 Z33 Z34	
0020	00004.000	539493-0001	RECEPTACLE ACCEPTS LEAD SIZE.018-.040DLD	EA
			AMP-1-380737-0	
0020A			J1 THRU J4	
			AMP-1-380737-0	
0021	00015.000	230561-0000	CAP .02000 MF 25V 80/-20 %	EA
			ERI-5035Y5U203Z	
0021A			C2 THRU C16	
			ERI-5035Y5U203Z	
0022	00001.000	230906-0000	CAP 150.000 MF 15V 10% CASE SIZE C	EA
			MIL-CS13BD157K	
0022A			C1	
			MIL-CS13BD157K	
0023	00001.000	418093-0010	COIL 5.60 UH .13 OHMS 10%	EA
			MIL-MS90542-14	
0023A			L1	
			MIL-MS90542-14	
0024	REF	959203-9501	DIAGRAM,LOGIC DET-PLAYBACK CONTROL	EA
0025	00001.000	233221-0000	RES 10.000 OHM .25W 5.	EA
			AB -CB1005	
0025A			R1	
			AB -CB1005	

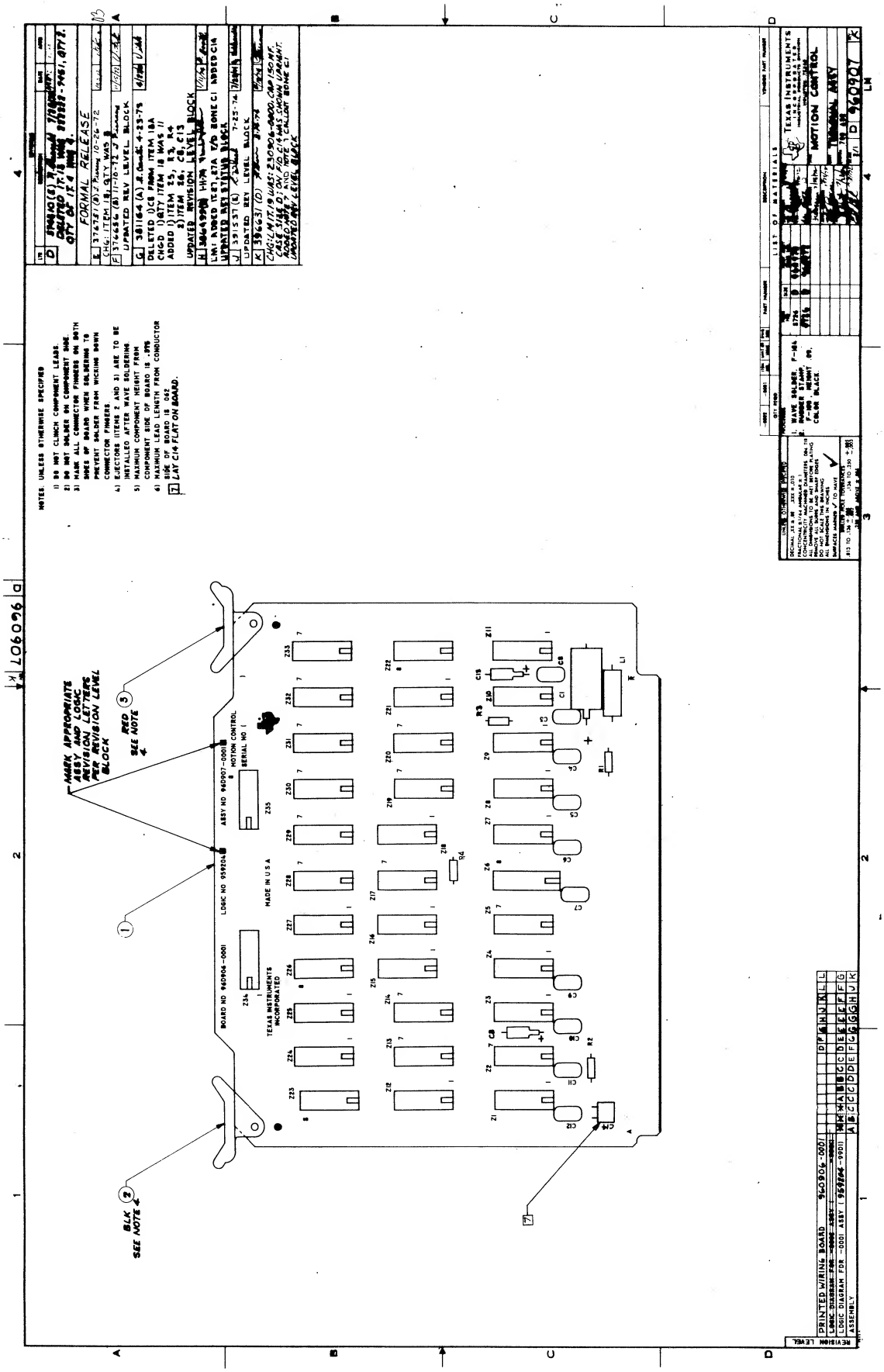

PART NUMBER	REV	DESCRIPTION.....
960907-0001	K	MOTION CONTROL

ITEM.	QUANTITY.	COMPONENT..	DESCRIPTION.....		UM
0001	00001.000	960906-0001	PW BOARD,MOTION CONTROL 1209-0906-000		EA
0002	00001.000	231802-0110	EJECTOR,PC BD BLACK 533-887-0003 18677	SCA-S-202	EA
0003	00001.000	231802-0102	EJECTOR,PC BD RED 533-887-0005	SCA-S-202	EA
0004	00006.000	222222-7400	NETWORK SN7400N - 3-000		EA
0004A			Z3 Z9 Z25 Z32 Z12 Z22 - 3-000		
0005	00004.000	222222-7402	NETWORK SN7402N TI--SN7402N		EA
0005A			Z16,Z19,Z24,Z29 TI--SN7402N		
0006	00003.000	222222-7404	NETWORK SN7404N		EA
0006A			Z23,Z33,Z35		
0007	00002.000	222222-7408	NETWORK-SN7408N		EA
0007A			Z2,Z10		
0008	00003.000	222222-7410	NETWORK SN7410N - 3-000		EA
C008A			Z4,Z8,Z34 - 3-000		
0009	00001.000	222222-7420	NETWORK SN7420N -SN7420N		EA
0009A			Z28, -SN7420N		
0011	00002.000	222222-7427	NETWORK SN7427N TI--SN7427N		EA
0011A			Z27,Z31 TI--SN7427N		
0012	00002.000	222222-7432	NETWORK SN7432N -SN7432N		EA
0012A			Z26,Z30 -SN7432N		
0014	00005.000	222222-7107	NETWORK SN74107N		EA
0014A			Z13,Z14,Z15,Z20,Z21		
0015	00002.000	222222-7403	NETWORK SN7403N		EA
0015A			Z1,Z11		
0016	00002.000	222222-7437	NETWORK SN7437N		EA
0016A			Z5,Z7		
0017	00001.000	222222-7174	NETWORK SN74174N		EA
0017A			Z6		
0018	00010.000	230561-0000	CAP .02000 MF 25V 80/-20 % ERI-5835Y5U203Z		EA
0018A			C2 THRU C7, C9 THRU C12 ERI-5835Y5U203Z		
0019	00001.000	230855-0001	CAP 68.000 MF 15V 10% CASE SIZE C MIL-CS13BD686K		EA
0019A			C1 MIL-CS13BD686K		
0020	00001.000	418093-0010	COIL 5.60 UH .13 OHMS 10% MIL-MS90542-14		EA
0020A			L1 MIL-MS90542-14		
0021	00002.000	233869-0000	RES 2000.0 OHM .25W 5. AB -CB2025		EA
0021A			R1,R2 AB -CB2025		
0022	REF	959204-9901	DIAGRAM,LOGIC DET-MOTION CONTROL		EA
0023	00002.000	240000-7108	NETWORK SN74H108N		EA
0023A			Z17,Z18		
0025	00002.000	233484-0000	RES 150.00 OHM .25W 5. AB -CB1515		EA
0025A			R3 R4 AB -CB1515		
0026	00002.000	230686-0000	CAP 1.000 MF 35V 10% CASE SIZE A MIL-CS13BF105K		EA
0026A			C8 C13 MIL-CS13BF105K		
0027	00001.000	230546-0006	CAP .01000 MF 200V 10% MIL-CK06BX103K		EA
0027A			C14 MIL-CK06BX103K		

606096 a

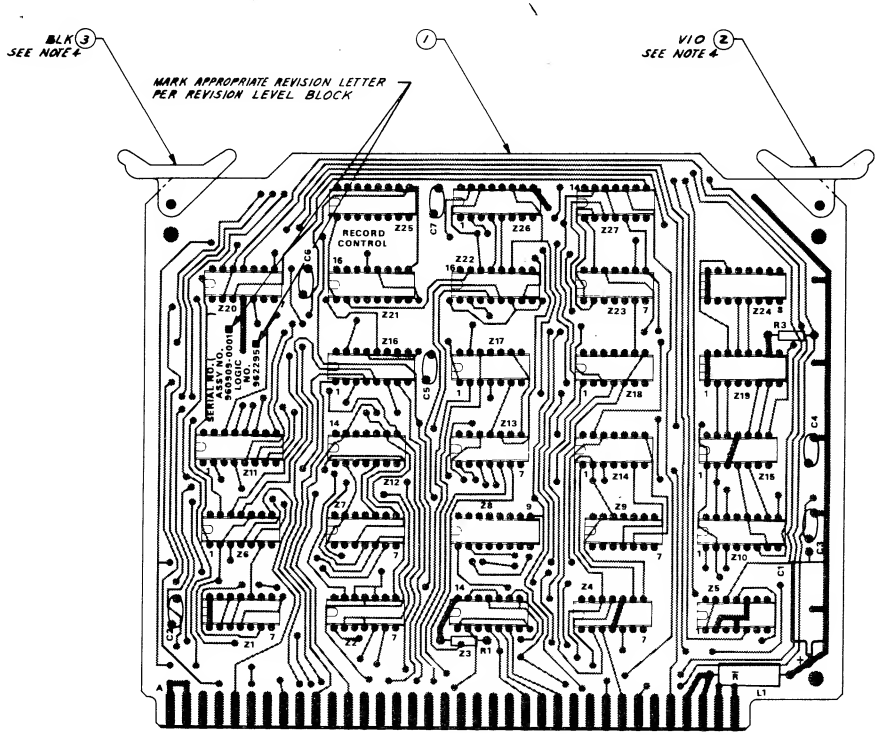

NOTES UNLESS OTHERWISE SPECIFIED

1) DO NOT CLINCH COMPONENT LEADS
2) DO NOT SOLDER ON COMPONENT SIDE
3) MASK ALL CONNECTOR FINGERS ON BOTH SIDES OF BOARD WHEN SOLDERING TO PREVENT SOLDER FROM WICKING DOWN CONNECTOR FINGERS
4) EJECTORS (ITEMS 2 AND 3) ARE TO BE INSTALLED AFTER WAVE SOLDERING
5) MAXIMUM COMPONENT HEIGHT FROM COMPONENT SIDE OF BOARD IS .325
6) MAXIMUM LEAD LENGTH FROM CONDUCTOR SIDE OF BOARD IS .080

REVISIONS

LTR	DESCRIPTION	DATE	APPD
A	367319 (C) R. Purcell 11-8-71 SEE CN367319	[illegible]	[illegible]
B	370631 R. Purcell 2-4-72 SEE CN370631	[illegible]	[illegible]
C	370642 R. Purcell 2-4-72 SEE CN370642	[illegible]	[illegible]
D	374309 (E) R. Pu[illegible] 4-19-72 SEE CN374309	[illegible]	[illegible]
	FORMAL RELEASE		
E	396756 (B) R. Pu[illegible] 6-12-74 1) ADDED PWB TO REVISION LEVEL BLOCK & UP-DATED REV LEVELS	6-12-74	[illegible]
F	396632 (D) R. Pu[illegible] 8-15-74 1) UPDATED REV LEVEL BLOCK. 2) ON LM, CHANGED ITEM 15, WAS P/N 230906-0000, QTY 1.	8/19/74	[illegible]
G	CN420109 [illegible] 5-20-77 1) NOTE 5, DIM .325 WAS .375 (2) NOTE 6, DIM .084 WAS .062	5-20-77	[illegible]

LIST OF MATERIALS

QTY REQD	ITEM NO	UNIT OF ISSUE	DWG SIZE	PART NUMBER	DESCRIPTION	VENDOR PART NUMBER
0002	0001					

REVISION LEVEL									
PWB 960908-0001	A	B	C	D	E	E	E	E	
LOGIC DIAGRAM FOR -0001 ASSY (962295-9901)	*	*	A	B	B	C	D	D	
ASSEMBLY	A	B	C	D	E	E	F	G	

UNLESS OTHERWISE SPECIFIED
DECIMAL .XX ± .02 .XXX ± .010
FRACTIONAL ± 1/64 ANGULAR ± 1
CONCENTRICITY MACHINED DIAMETERS .004 T.I.R.
ALL DIMENSIONS TO BE MET BEFORE PLATING
REMOVE ALL BURRS AND SHARP EDGES
DO NOT SCALE THIS DRAWING
ALL DIMENSIONS IN INCHES
SURFACES MARKED ✓ TO HAVE ✓
DRILLED HOLE TOLERANCES
.013 TO .136 +.003 -.002 .136 TO .250 +.005 -.003
.250 AND ABOVE ±.005

PROCESSES
1. WAVE SOLDER, F-124
2. RUBBER STAMP, F-100, HEIGHT .09, COLOR BLACK

PROJ NO	SIZE	NEXT ASSY DWG NO
8726	D	959389

DRAFTSMAN 4-17-72
CHECKED 4-17-72
APPD 5/11/72
APPD 5/11/72
APPD 5/11/72
APPD 5/11/72

TEXAS INSTRUMENTS INCORPORATED
INDUSTRIAL PRODUCTS DIVISION
HOUSTON, TEXAS

TITLE RECORD CONTROL
UNIT CASSETTE ASSEMBLY
SYSTEM 700 ASR
SCALE 2/1
D 960909
LM

PART NUMBER	REV	DESCRIPTION
0960909-0001	F	RECORD CONTROL

ITEM.	QUANTITY.	COMPONENT..	DESCRIPTION	UM
0001	00001.000	0960908-0001	PW BOARD,RECORD CONTROL 1209-0908-000	EA
0002	00001.000	0533887-0015	EJECTOR,PCB,NON-LOCKING,VIOLET SCA - S--02 VIOLET	EA
0003	00001.000	0533887-0003	EJECTOR,PCB,NON-LOCKING,BLACK SCA - S--02 BLACK	EA
0005	00004.000	0222222-7400	NETWORK SN7400N - 3-000	EA
0005A			Z2,Z6,Z9,Z18 - 3-000	
0006	00001.000	0222222-7402	NETWORK SN7402N TI- - SN-402N	EA
0006A			Z12, TI- - SN-402N	
0007	00001.000	0222222-7404	NETWORK SN7404N	EA
0007A			Z13	
0008	00002.000	0222222-7410	NETWORK SN7410N - 3-000	EA
0008A			Z14,Z17 - 3-000	
0009	00001.000	0222222-7425	NETWORK SN7425N	EA
0009A			Z15	
0010	00002.000	0222222-7427	NETWORK SN7427N TI- - SN-427N	EA
0010A			Z7,Z23 TI- - SN-427N	
0012	00004.000	0222222-7474	NETWORK SN7474N - 3-000	EA
0012A			Z1,Z4,Z5,Z20 - 3-000	
0013	00006.000	0222222-7175	NETWORK SN74175N	EA
0013A			Z8,Z10,Z11,Z16,Z21,Z25	
0014	00004.000	0222222-7193	NETWORK SN74193N - SN-4193N	EA
0014A			Z22,Z24,Z26,Z19 - SN-4193N	
0015	00001.000	0222222-7403	NETWORK SN7403N	EA
0015A			Z3	
0016	00001.000	0240000-7411	NETWORK-SN74H11N - C -000	EA
0016A			Z27 - C -000	
0017	00006.000	0532736-0002	CAP FIX CERAMIC .02 MF 20/80% 25 VOLT CRL - 2-DU60E203ZAC	EA
0017A			C2 THRU C7 CRL - 2-DU60E203ZAC	
0018	00001.000	0572924-0011	CAP FIX TANT SOLID 68 MFD 10 % 15 VOLT QPL - M3-003/1-2274	EA
0018A			C1 QPL - M3-003/1-2274	
0019	00001.000	0538433-0001	COIL RF 5.60 UH .13 OHM 885 MA LT10K158 QPL - M-90542-14	EA
0019A			L1 QPL - M-90542-14	
0020	REF	0962295-9901	DIAGRAM,LOGIC DET-RECORD CONTROL	EA
0021	00002.000	0972946-0072	RES FIX 2.0K OHM 5 % .25 W CARBON FILM RCH - R-25	EA
0021A			R1 R3 RCH - R-25	
0022	REF	0960991-9501	PROGRAM TEST,RECORD CONTROL	EA

NOTES UNLESS OTHERWISE SPECIFIED

1) DO NOT CLINCH COMPONENT LEADS
2) DO NOT SOLDER ON COMPONENT SIDE
3) MASK ALL CONNECTOR FINGERS ON BOTH SIDES OF BOARD WHEN SOLDERING TO PREVENT SOLDER FROM WICKING DOWN CONNECTOR FINGERS
4) EJECTORS (ITEMS 2 AND 3) ARE TO BE INSTALLED AFTER WAVE SOLDERING
5) MAXIMUM COMPONENT HEIGHT FROM COMPONENT SIDE OF BOARD IS .375
6) MAXIMUM LEAD LENGTH FROM CONDUCTOR SIDE OF BOARD IS .062

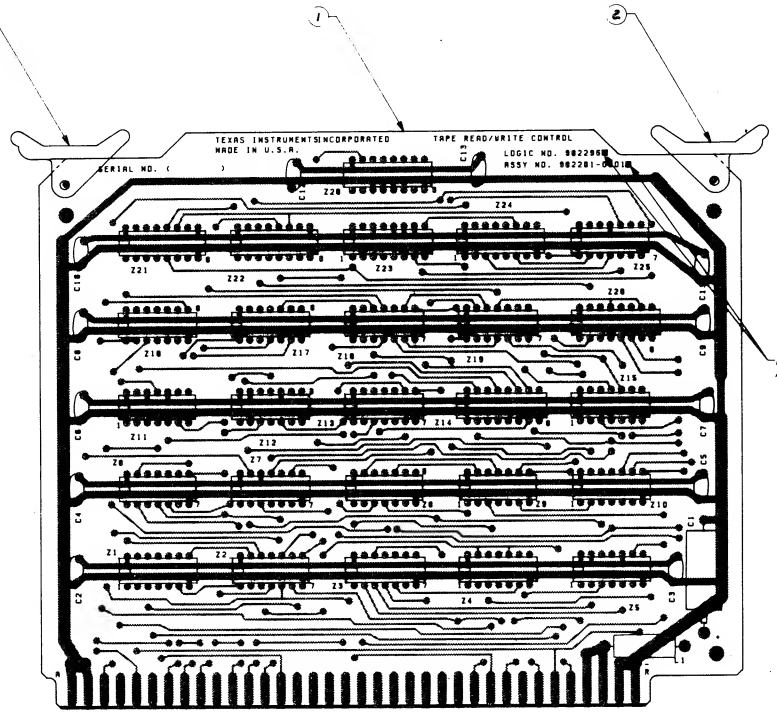

REVISIONS			
LTR	DESCRIPTION	DATE	APPD
D	372893 (C) D.Dunbar 8-8-72 REDRAWN W/CHANGES PER REDESIGN	8/10/72	[illegible]
E	381172 (D) [illegible] 5-11-73	6/16/73	[illegible]
	UPDATED REV. LETTER STATUS BLOCK		

REVISION LEVEL			
PRINTED WIRING BD FOR -0001 ASSY (962280-0001)		C	
LOGIC DIAGRAM FOR -0001 ASSY (962296-9901)	A	B	C
ASSEMBLY	C	D	E

QTY REQD		PART NUMBER	DESCRIPTION	VENDOR PART NUMBER
0002	-0001			

LIST OF MATERIALS

ITEM	DESCRIPTION	PART NO	SIZE	NEXT ASSY DWG NO
1	WAVE SOLDER, F-126	8726	D	959389
2	RUBBER STAMP, F-100, HEIGHT .09, COLOR BLACK			

UNLESS OTHERWISE SPECIFIED
DECIMAL .XX ± .02 .XXX ± .010
FRACTIONAL ± 1/64 ANGULAR ± 1°
CONCENTRICITY MACHINED DIAMETERS .004 TIR
ALL DIMENSIONS TO BE MET BEFORE PLATING
REMOVE ALL BURRS AND SHARP EDGES
DO NOT SCALE THIS DRAWING
ALL DIMENSIONS IN INCHES
SURFACES MARKED ✓ TO HAVE ✓
DRILLED HOLE TOLERANCE
.013 TO .134 ± .002 .134 TO .250 ± .003
.250 AND ABOVE ± .003

TEXAS INSTRUMENTS INCORPORATED
INDUSTRIAL PRODUCTS DIVISION
HOUSTON, TEXAS

TAPE READ/WRITE CONTROL
CASSETTE ASSY
708 ASR
SCALE 2/1 D 962281 REV E

LM

PART NUMBER	REV	DESCRIPTION
0962281-0001	E	TAPE READ/WRITE CONTROL

ITEM.	QUANTITY.	COMPONENT..	DESCRIPTION	UM
0001	00001.000	0962280-0001	PW BOARD,TAPE READ/WRITE CONTROL 1209-2280-000	EA
0002	00001.000	0533887-0011	EJECTOR,PCB,NON-LOCKING,BLUE SCA - S--02 BLUE	EA
0003	00001.000	0533887-0003	EJECTOR,PCB,NON-LOCKING,BLACK SCA - S--02 BLACK	EA
0004	00001.000	0222222-7437	NETWORK SN7437N	EA
0004A			Z10	
0005	00002.000	0222222-7400	NETWORK SN7400N - 3-000	EA
0005A			Z3,Z17 - 3-000	
0006	00002.000	0222222-7402	NETWORK SN7402N TI- - SN-402N	EA
0006A			Z8 Z13 TI- - SN-402N	
0007	00002.000	0222222-7404	NETWORK SN7404N	EA
0007A			Z2 Z9	
0008	00001.000	0222222-7408	NETWORK-SN7408N	EA
0008A			Z18	
0009	00001.000	0222222-7410	NETWORK SN7410N - 3-000	EA
0009A			Z6 - 3-000	
0010	00001.000	0222222-7425	NETWORK SN7425N	EA
0010A			Z25	
0011	00001.000	0222222-7451	NETWORK SN7451N - SN-451N	EA
0011A			Z1 - SN-451N	
0012	00004.000	0222222-7474	NETWORK SN7474N - 3-000	EA
0012A			Z5 Z7 Z11 Z12 - 3-000	
0013	00001.000	0222222-7486	NETWORK-SN7486N	EA
0013A			Z15	
0015	00001.000	0222222-7107	NETWORK SN7107N	EA
0015A			Z4	
0016	00001.000	0222222-7164	NETWORK SN74164N TI- - SN-4164N	EA
0016A			Z16 TI- - SN-4164N	
0017	00002.000	0222222-7166	NETWORK SN74166N	EA
0017A			Z23 Z26	
0018	00002.000	0222222-7175	NETWORK SN74175N	EA
0018A			Z14 Z20	
0019	00003.000	0222222-7193	NETWORK SN74193N - SN-4193N	EA
0019A			Z21 Z22 Z24 - SN-4193N	
0020	00001.000	0240000-7452	NETWORK-SN74H52N	EA
0020A			Z19	
0021	00012.000	0532736-0002	CAP FIX CERAMIC .02 MF 20/80% 25 VOLT CRL - 2-DU6CE203ZAC	EA
0021A			C2 THRU C13 CRL - 2-DU6CE203ZAC	
0022	00001.000	0972924-0012	CAP FIX TANT SOLID 150 MFD 10 % 15 VOLT QPL - M3-003/1-2277	EA
0022A			C1 QPL - M3-003/1-2277	
0023	00001.000	0538433-0001	COIL RF 5.60 UH .13 OHM 885 MA LT10K158 QPL - M-90542-14	EA
0023A			L1 QPL - M-90542-14	
0025	REF	0962296-9901	DIAGRAM,LOGIC DET-TAPE READ/WRITE CONT	EA
0026	REF	0960552-9901	PROGRAM TEST,TAPE READ/WRITE	EA

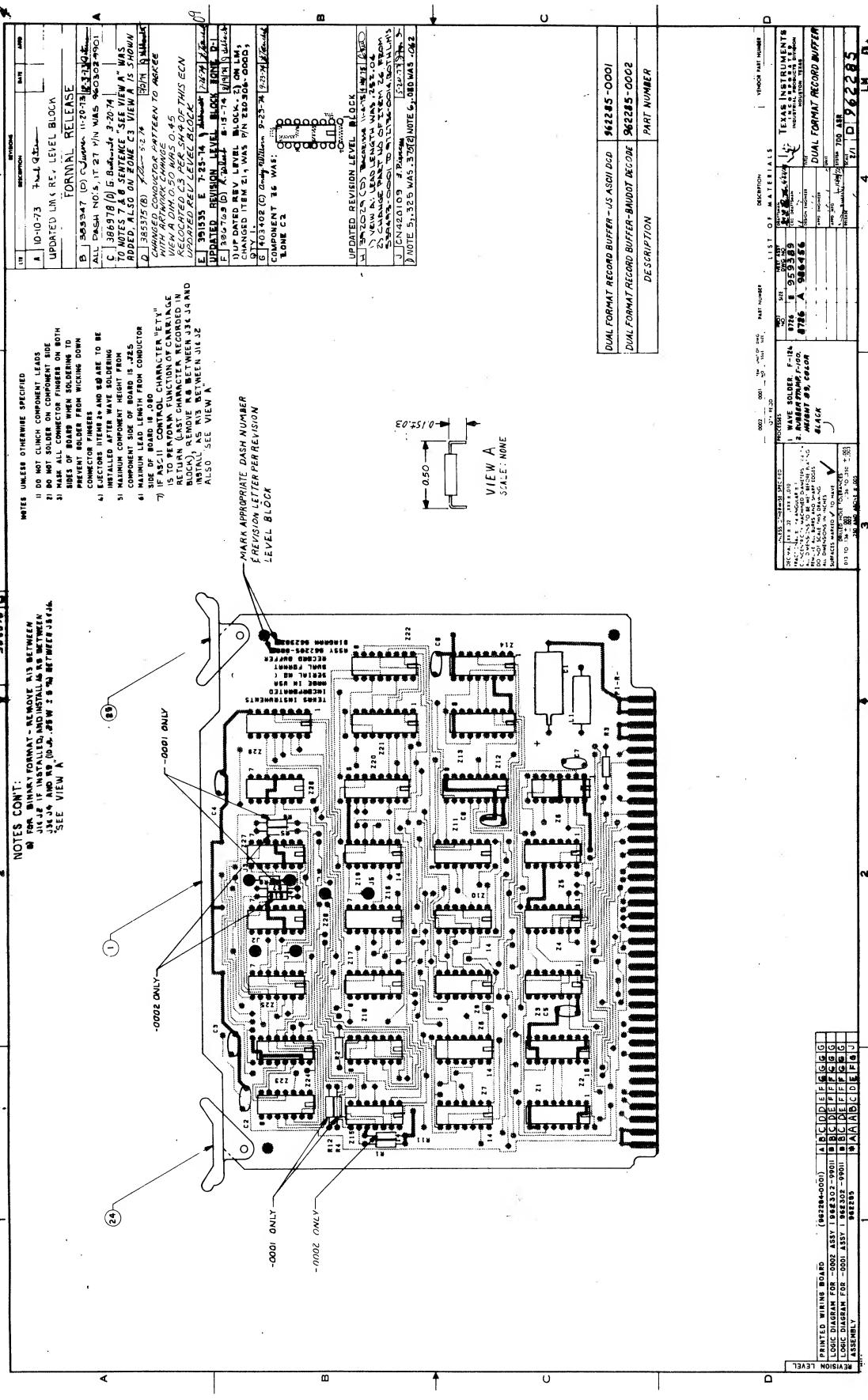

PART NUMBER	REV	DESCRIPTION
0962285-0001	J	DUAL FORMAT RECORD BUFFER-US ASCII DCD
0962285-0002	J	DUAL FORMAT RECORD BUFFER-BAUDOT DECODE

ITEM.	QUANTITY.	COMPONENT..	DESCRIPTION	UM
0001	00001.000	0962284-0001	PWB,DUAL FORMAT RECORD BUFFER	EA
0002	00002.000	0222222-7400	NETWORK SN7400N	EA
0002A			- 3-000 Z9,Z16	
			- 3-000	
0003	00002.000	0222222-7402	NETWORK SN7402N TI- - SN-402N	EA
0003A			Z7,Z18 TI- - SN-402N	
0004	00003.000	0222222-7404	NETWORK SN7404N	EA
0004A			Z8,Z10,Z25	
0005	00001.000	0222222-7408	NETWORK-SN7408N	EA
0005A			Z3	
0006	00001.000	0222222-7410	NETWORK SN7410N	EA
0006A			- 3-000 Z17	
			- 3-000	
0007	00001.000	0222222-7420	NETWORK SN7420N - SN-420N	EA
0007A			Z19 - SN-420N	
0008	00001.000	0222222-7427	NETWORK SN7427N TI- - SN-427N	EA
0008A			Z15 TI- - SN-427N	
0009	00001.000	0222222-7474	NETWORK SN7474N	EA
0009A			- 3-000 Z28	
			- 3-000	
0010	00001.000	0222222-7492	NETWORK-SN7492N	EA
0010A			Z5	
0011	00002.000	0222222-7157	NETWORK SN74157N	EA
0011A			Z12,Z22	
0012	00002.000	0222222-7164	NETWORK SN74164N TI- - SN-4164N	EA
0012A			Z4,Z23 TI- - SN-4164N	
0013	00001.000	0222222-7165	NETWORK SN74165N	EA
0013A			Z24	
0014	00001.000	0222222-7174	NETWORK SN74174N	EA
0014A			Z21	
0015	00006.000	0222222-7193	NETWORK SN74193N - SN-4193N	EA
0015A			Z1,Z2,Z13,Z14,Z20,Z29 - SN-4193N	
0016	00001.000	0222222-7197	NETWORK SN74197N	EA
0016A			Z6	
0017	00002.000	0222222-7430	NETWORK SN7430N - SN-430N	EA
0017A			Z26,Z27 - SN-430N	
0018	00001.000	0966714-0001	NETWORK-2102 MOS STATIC RAM 1024 BIT PLT MTL - MF-102P	EA
0018A			Z11 MTL - MF-102P	
0019	00007.000	0532736-0002	CAP FIX CERAMIC .02 MF 20/80% 25 VOLT CRL - 2-DU60E203ZAC	EA
0019A			C2 THRU C8 CRL - 2-DU60E203ZAC	
0020	00001.000	0538433-0001	COIL RF 5.60 UH .13 OHM 885 MA LT10K158 QPL - M-90542-14	EA
0020A			L1 QPL - M-90542-14	
0021	00001.000	0972924-0011	CAP FIX TANT SOLID 68 MFD 10 % 15 VOLT QPL - M3-003/1-2274	EA

PART NUMBER	REV	DESCRIPTION
0962285-0001	J	DUAL FORMAT RECORD BUFFER-US ASCII DCD

ITEM.	QUANTITY.	COMPONENT..	DESCRIPTION	UM
0021A			C1	
			QPL - M3-C03/1-2274	
0022	00002.000	0972946-0072	RES FIX 2.0K OHM 5 % .25 W CARBON FILM	EA
			ROH - R-25	
0022A			R2,R3	
			ROH - R-25	
0023	00005.000	0972946-0017	RES FIX 10.0 OHM 5 % .25 W.CARBON FILM	EA
			ROH - R-25	
0023A			R4,R6,R7,R8,R12	
			ROH - R-25	
0024	00001.000	0533387-0003	EJECTOR,PCB,NON-LOCKING,BLACK	EA
			SCA - S--02 BLACK	
0025	00001.000	0533887-0009	EJECTOR,PCB,NON-LOCKING,GREEN	EA
			SCA - S--02 GREEN	
0026	00006.000	0972736-0014	SOCKET,GLD SPRING,TIN/EYLT-.025 PIN DIA	EA
0026A			J1 THRU J6	
0027	REF	0962302-9901	DIAG,LGC,DET-DUAL FORMAT RECORD BUFFER	EA
0028	REF	0955738-9901	TEST PROGRAM,SPC RECORD BUFFER PCB	EA

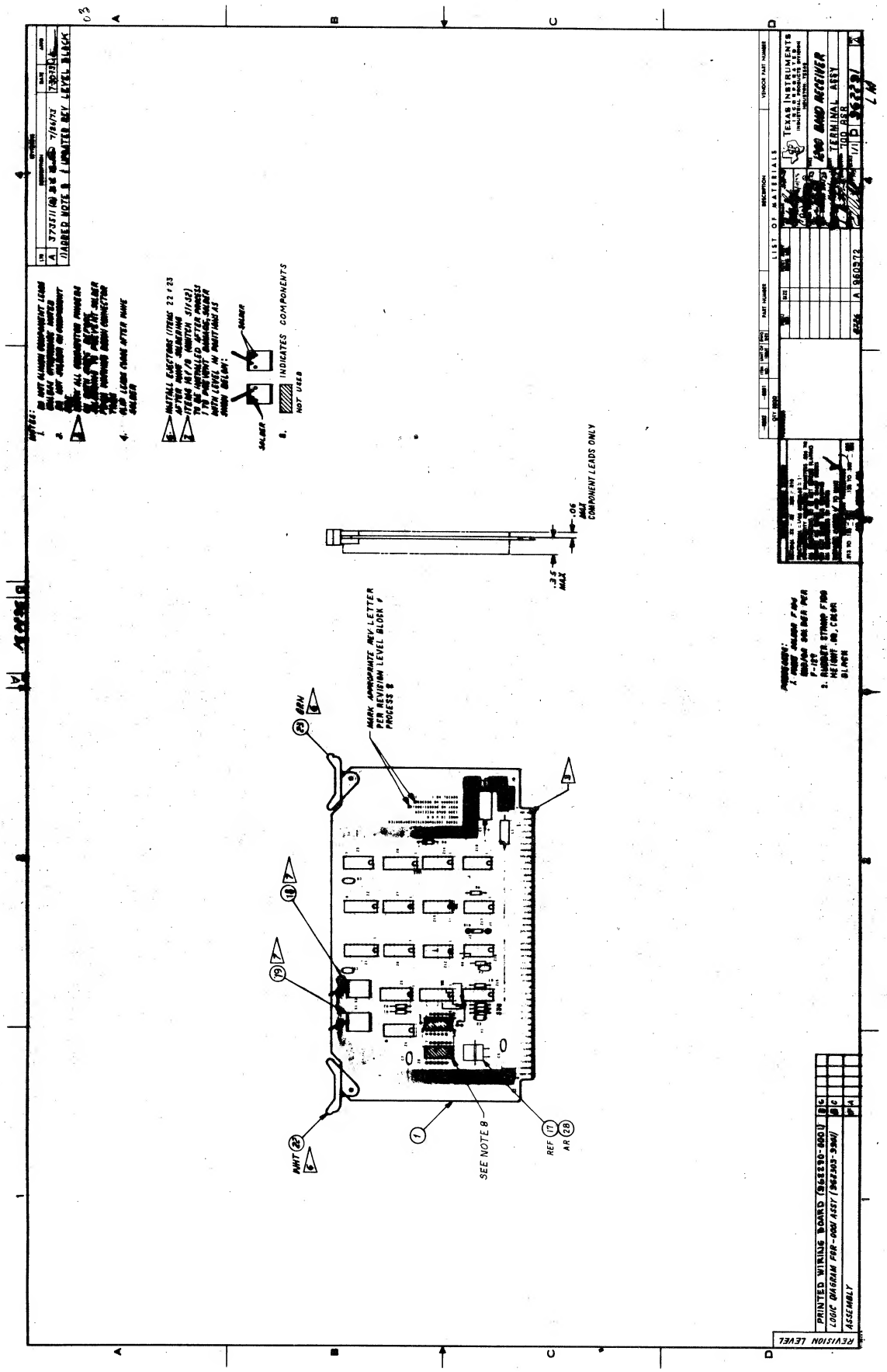

PART NUMBER	REV	DESCRIPTION
962291-0001	A	1200 BAUD RECEIVE

ITEM	QUANTITY	COMPONENT	DESCRIPTION	UM
0001	00001.000	962290-0001	PWB,1200 BAUD RECEIVER 1209-2290-000	EA
0002	00001.000	230906-0080	CAP 150.000 MF 15V 10% CASE SIZE D MIL-CS13BD157K	EA
0002A			C1 MIL-CS13BD157K	
0003	00005.000	230561-0000	CAP .02000 MF 25V 80/-20 % ERI-5835Y5U203Z	EA
0003A			C3,C4,C5,C6,C7 ERI-5835Y5U203Z	
0004	00001.000	418093-0010	COIL 5.60 UH .13 OHM 10.% MIL-MS90542-14	EA
0004A			L1 MIL-MS90542-14	
0005	00001.000	230571-1000	CAP .022 MF 100V 10. % MIL-CK06BX223K	EA
0005A			C2 MIL-CK06BX223K	
0006	00002.000	222222-7400	NETWORK SN7400N - 3-000	EA
0006A			Z15,Z16 - 3-000	
0008	00001.000	222222-7403	NETWORK SN7403N	EA
0008A			Z17	
0009	00002.000	222222-7404	NETWORK SN7404N	EA
0009A			Z4,Z18	
0010	00002.000	222222-7474	NETWORK SN7474N - 3-000	EA
0010A			Z7,Z14 - 3-000	
0011	00001.000	222222-7492	NETWORK-SN7492N	EA
0011A			Z6	
0012	00002.000	222222-7497	NETWORK SN7497N	EA
0012A			Z2,Z11	
0013	00002.000	222222-7161	NETWORK SN74161N -SN74161N	EA
0013A			Z1,Z5 -SN74161N	
0014	00001.000	222222-7164	NETWORK SN74164N	EA
0014A			Z3	
0015	00001.000	222222-7165	NETWORK SN74165N	EA
0015A			Z8	
0016	00002.000	222222-7197	NETWORK SN74197N	EA
0016A			Z12,Z13	
0017	00001.000	538031-0006	CRYSTAL UNIT QUARTZ 13.5168 MHZ .005% MIL-CR60A/U13.5168MHZ	EA
0017A			Y1 MIL-CR60A/U13.5168MHZ	
0018	00001.000	235722-0006	SWITCH SUBMINI. TOGGLE 2 POSITION - C-CT8201	EA
0018A			S2 - C-CT8201	
0019	00001.000	235665-1075	SWITCH SUBMINI TOGGLE-CENTER OFF - C-CT8206	EA
0019A			S1 - C-CT8206	
0020	00002.000	233650-0000	RES 470.00 OHM .25W 5. AB -CB4715	EA

PART NUMBER	REV	DESCRIPTION
962291-0001	A	1200 BAUD RECEIVE

ITEM.	QUANTITY.	COMPONENT..	DESCRIPTION	UM
0020A			R4,R7 AB -CB4715	
0021	00007.000	233869-0000	RES 2000.0 OHM .25W 5. AB -CB2025	EA
0021A			R1,R2,R3,R5,R6,R8,R9 AB -CB2025	
0022	00001.000	231802-0009	EJECTOR WHT 8-200 - 0-000	EA
0023	00001.000	231802-0005	EJECTOR GRN 8-200 SCA-8-200	EA
0024	REF	962303-9901	DIAGRAM,LOGIC,DET-1200 BAUD RECEIVER	EA
0025	REF	960994-9901	TEST PROGRAM,1200 BAUD RECEIVER	EA
0026	00001.000	233221-0000	RES 10.000 OHM .25W 5. AB -CB1005	EA
0026A			R10 AB -CB1005	
0027	00002.000	539493-0001	RECEPTACLE ACCEPTS LEAD SIZE.018-.040GLD AMP-1-380737-0	EA
0027A			J1,J2 AMP-1-380737-0	
0028	AR	236531-0009	WIRE 24 AWG 1 COND WHITE PVC STRD -#24 WHI	FT

NOTES:

1. DO NOT CLINCH COMPONENT LEADS UNLESS OTHERWISE NOTED
2. DO NOT SOLDER ON COMPONENT SIDE
3. MASK ALL CONNECTOR FINGERS ON BOTH SIDES BEFORE SOLDERING TO PREVENT SOLDER FROM WICKING DOWN CONNECTOR TAB
4. CLIP LEADS CLOSE AFTER WAVE SOLDERING

6. INSTALL EJECTORS (ITEMS 21&22) AFTER WAVE SOLDERING
7. ITEM 19 (SWITCH S1) TO BE INSTALLED AFTER PROCESS 1 TO PREVENT DAMAGE, SOLDER WITH LEVER IN POSITIONS SHOWN BELOW:

8. (DELETED)
9. FOR BINARY OPTION REMOVE R6 & INSTALL R11 (10Ω) BETWEEN J3 & J4. FOR PARITY GENERATION REMOVE R11 & INSTALL R6 (10Ω) BETWEEN J1 & J2.

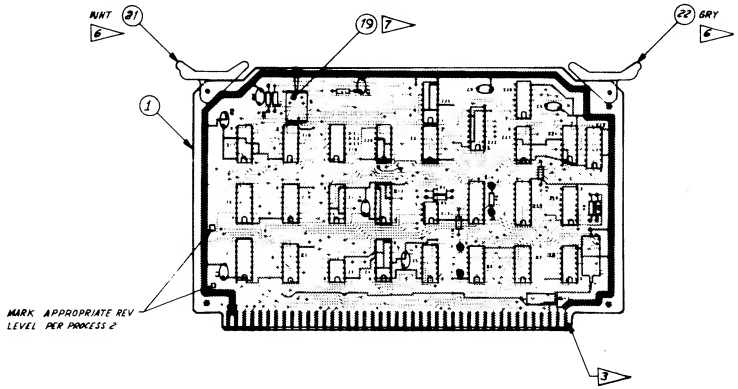

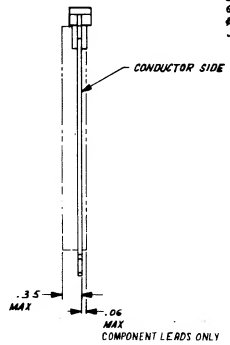

PROCESSES:
1. WAVE SOLDER F124 AND/OR SOLDER PER F-127
2. RUBBER STAMP F100 HEIGHT .09, COLOR BLACK

REVISIONS

ZONE	LTR	DESCRIPTION	DATE	APPROVED
	A	373512 (B) 7-6-73 REDRAWN WITH CHANGES PER ENG DESIGN CHG TO AGREE WITH ARTWORK CHG.	8/21/73	
	B	382872 (E) 1-22-74 UPDATED REV. LEVEL BLOCK.	1-3/74	
	C	391536 E 7-25-74 UPDATED REVISION LEVEL BLOCK	7-26-74	
	D	396770 (D) 8-14-74 1) UPDATED REV LEVEL BLOCK 2) ON LM, CHANGED ITEM 2, WAS P/N 230906-0000, QTY 1.	8/19/74	

PARTS LIST

-2 QTY REQD	-1 QTY REQD	ITEM NO	CODE IDENT	PART OR IDENTIFYING NUMBER	NOMENCLATURE OR DESCRIPTION	PROCUREMENT SPECIFICATION
PRINTED WIRING BOARD				(962292-0001)		B C D E F G H H
LOGIC DIAGRAM FOR-0001 ASSY				(962304-9901)		B C C C C C C D
ASSEMBLY						# A A A A B C D

UNLESS OTHERWISE SPECIFIED
- REMOVE ALL BURRS AND SHARP EDGES
- CONCENTRICITY MACHINED DIAMETERS .010 FIR
- DIMENSIONAL LIMITS APPLY BEFORE FINISH PROCESSING
- IDENTIFYING NUMBERS SHOWN IN PARENTHESES FOR REFERENCE ONLY
- INTERPRET DRAWING IN ACCORDANCE WITH MIL-STD-100

HOLE TOLERANCE

.013 THRU .125 +.004 -.001	.126 THRU .250 +.005 -.001	.251 THRU .500 +.006 -.001
.501 THRU .780 +.008 -.001	.781 THRU 1.000 +.010 -.001	1.001 THRU 2.000 +.012 -.001

UNLESS OTHERWISE SPECIFIED
- DIMENSIONS ARE IN INCHES
- TOLERANCES
  ANGLES ±1°
  3 PLACE DECIMALS ±.010
  2 PLACE DECIMALS ±.02

MATERIAL:

NEXT ASSY	USED ON
960872	8276

APPLICATION

	DATE
DWN	7-10-73
CHK	4/11/72
ENGR	8/21/73
QA	
APVD	7-9-73
CONTR NO	7-9-73
DESIGN ACTIVITY RELEASE	9/11/73
CK	7/1/73

TEXAS INSTRUMENTS INCORPORATED Equipment Group Dallas, Texas

1200 BAUD TRANSMIT

SIZE	CODE IDENT NO	DRAWING NO
D	96214	962293

SCALE 1/1 REV D SHEET

FILMED LM

962293

PART NUMBER	REV	DESCRIPTION.....		
962293-0001	D	1200 BAUD TRANSMIT		
ITEM.	QUANTITY.	COMPONENT..	DESCRIPTION.....	UM
0001	00001.000	962292-0001	PWB,1200 BAUD TRANSMITTER 1209-2292-C00	EA
0002	00001.000	230855-0001	CAP 68.000 MF 15V 10% CASE SIZE C MIL-CS13BD686K	EA
0002A			C1 MIL-CS13BD686K	
0003	00018.000	230561-0000	CAP .02000 MF 25V 80/-20 % ERI-5835Y5U203Z	EA
0003A			C2 THRU C9 ERI-5835Y5U203Z	
0004	00001.000	418093-0010	COIL 5.60 UH .13 OHMS 10% MIL-MS90542-14	EA
0004A			L1 MIL-MS90542-14	
0005	00003.000	222222-7400	NETWORK SN7400N - 3-000	EA
0005A			Z2,Z26,Z19 - 3-000	
0006	00002.000	222222-7402	NETWORK SN7402N TI--SN7402N	EA
0006A			Z5,Z9, TI--SN7402N	
0007	00002.000	222222-7404	NETWORK SN7404N	EA
0007A			Z8,Z10	
0008	00001.000	222222-7410	NETWORK SN7410N - 3-000	EA
0008A			Z18 - 3-000	
0009	00006.000	222222-7474	NETWORK SN7474N - 3-000	EA
0009A			Z11,Z17,Z20,Z21,Z23,Z24 - 3-000	
0010	00003.000	222222-7497	NETWORK SN7497N	EA
0010A			Z4,Z25,Z27	
0011	00001.000	222222-7164	NETWORK SN74164N TI--SN74164N	EA
0011A			Z6 TI--SN74164N	
0012	00001.000	222222-7165	NETWORK SN74165N	EA
0012A			Z22	
0013	00001.000	222222-7180	NETWORK SN74180N	EA
0013A			Z7	
0014	00001.000	222222-7191	NETWORK SN74191N	EA
0014A			Z12 -SN74193N	
0015	00001.000	222222-7433	NETWORK SN7433N	EA
0015A			Z16	
0016	00002.000	537948-0001	NETWORK SN75150P TI -SN75150P	EA
0016A			Z3,Z13 TI -SN75150P	
0017	00001.000	537947-0001	NETWORK SN75154N TI -SN75154N	EA
0017A			Z1 TI -SN75154N	
0018	00002.000	800006-0001	NETWORK,64 WORDX4 BIT 16 PIN DUAL FCD-3341	EA
0018A			Z14,Z15 FCD-3341	
0019	00001.000	235665-1075	SWITCH SUBMINI TOGGLE-CENTER OFF - C-CT8206	EA
0019A			S1 - C-CT8206	
0020	00009.000	233869-0000	RES 2000.0 OHM .25W 5. AB -CB2025	EA
0020A			R1,R2,R3,R4,R5,R7,R8,R9,R10 AB -CB2025	
0021	00001.000	231802-0009	EJECTOR WHT 8-200	EA
0022	00001.000	231802-0008	EJECTOR GRY 8-200 SCA-8-200	EA
0023	00004.000	539493-0001	RECEPTACLE ACCEPTS LEAD SIZE.018-.040GLD AMP-1-380737-0	EA
0023A			J1 THRU J4 AMP-1-380737-0	
0025	00001.000	233221-0000	RES 10.000 OHM .25W 5. AB -CB1005	EA
0025A			R6 AB -CB1005	
0026	REF	962304-9901	DIAGRAM,LOGIC,DET-1200 BAUD TRANSMIT	EA

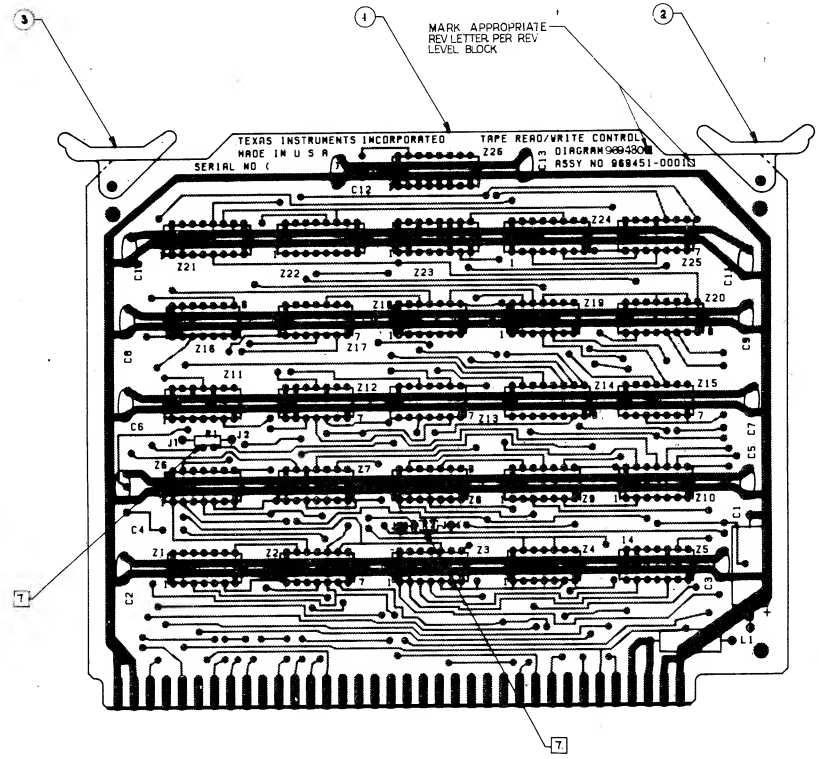

NOTES: UNLESS OTHERWISE SPECIFIED

1) DO NOT CLINCH COMPONENT LEADS.
2) DO NOT SOLDER ON COMPONENT SIDE.
3) MASK ALL CONNECTOR FINGERS ON BOTH SIDES OF BOARD WHEN SOLDERING TO PREVENT SOLDER FROM WICKING DOWN CONNECTOR FINGERS.
4) EJECTORS (ITEMS 2 AND 3) ARE TO BE INSTALLED AFTER WAVE SOLDERING.
5) MAXIMUM COMPONENT HEIGHT FROM COMPONENT SIDE OF BOARD IS .325
6) MAXIMUM LEAD LENGTH FROM CONNECTOR SIDE OF BOARD IS .009

7. FOR STANDARD (ASC II) FORMAT, INSTALL ITEM 24 AS R1 BETWEEN J1 AND J2. FOR BINARY FORMAT, INSTALL ITEM 24 AS R2 BETWEEN J3 AND J4. TO CHANGE FROM ASCII FORMAT TO BINARY FORMAT REMOVE R1 FROM BETWEEN J1 AND J2. AND RE-INSTALL AS R2 BETWEEN J3 & J4. TO CHANGE FROM BINARY FORMAT TO ASCII FORMAT REMOVE R2 AND REINSTALL AS R1 BETWEEN J1 & J2

LTR	DESCRIPTION	DATE	APPD
A	382302 9-25-73		
	LM, CHG IT. 27, PN WAS 539493-0001, VENDOR PN AMP-1-380737-0, QTY NOT AFFECTED		
	FORMAL RELEASE		
B	383374 D C. 11-29-73		
	ADDED NOTE 7 & PICTORIAL OF R2		
C	382872 (E) 1-22-72		
	UPDATED REV. LEVEL BLOCK.		
D	391555 (E) 7-25-74		
	UPDATED REV LEVEL BLOCK.		
E	396771 (D) 8-8-74		
	CHG: IT. 22 WAS: 230906-0000 150 MF, CASE SIZE D		
	UPDATED REV LEVEL BLOCK		
F	CN 420109		
	NOTE 5, .325 WAS .375 (2) NOTE 6, .009 WAS .062		

-0002	-0001	ITEM NO	UNIT OF ISSUE	DWG SIZE	PART NUMBER	DESCRIPTION	VENDOR PART NUMBER
QTY REQD						LIST OF MATERIALS	

PROCESS	PART NO	SIZE	HEAT ASSY DWG NO
1. WAVE SOLDER, F-124 AND (OR) SOLDER PER F-127	8726	E	959389
2. RUBBER STAMP, F-100, HEIGHT .09, COLOR BLACK			

UNLESS OTHERWISE SPECIFIED
DECIMAL .XX ± .02 .XXX ± .010
FRACTIONAL ± 1/64 ANGULAR ± 1
CONCENTRICITY MACHINED DIAMETERS .004 TIR
ALL DIMENSIONS TO BE MET BEFORE PLATING
REMOVE ALL BURRS AND SHARP EDGES
DO NOT SCALE THIS DRAWING
ALL DIMENSIONS IN INCHES
SURFACES MARKED ✓ TO HAVE
RIVETED HOLE TOLERANCES
.013 TO .136 ± .003
.136 TO .250 ± .005
.250 AND ABOVE ± .005

TEXAS INSTRUMENTS INCORPORATED
INDUSTRIAL PRODUCTS DIVISION
HOUSTON, TEXAS

TITLE: TAPE READ/WRITE CONTROL, DUAL FORMAT

SCALE 2/1 | D | 969451

PRINTED WIRING BOARD 969450	A	B	B	C	D	E	E	E	
[illegible]									
LOGIC DIAGRAM FOR -0001 ASSY (969480-99011	A	B	B	B	C	C	C	D	D
ASSEMBLY 969451	[illegible]	[illegible]	A	B	B	C	C	D	E F

LEVEL

969451

PART NUMBER	REV	DESCRIPTION
0969451-0001	F	DUAL FORMAT TAPE READ/WRITE CONTROL

ITEM.	QUANTITY.	COMPONENT..	DESCRIPTION	UM
0001	00001.000	0969450-0001	PWB,DUAL FORMAT TAPE READ/WRITE CONTROL	EA
0002	00001.000	0533887-0011	EJECTOR,PCB,NON-LOCKING,BLUE SCA - S--02 BLUE	EA
0003	00001.000	0533887-0003	EJECTOR,PCB,NON-LOCKING,BLACK SCA - S--02 BLACK	EA
0004	00001.000	0222222-7437	NETWORK SN7437N	EA
0004A			Z10	
0005	00002.000	0222222-7400	NETWORK SN7400N - 3-000	EA
0005A			Z3 Z17 - 3-000	
0006	00002.000	0222222-7402	NETWORK SN7402N TI- - SN-402N	EA
0006A			Z8 Z13 TI- - SN-402N	
0007	00002.000	0222222-7404	NETWORK SN7404N	EA
0007A			Z2 Z9	
0008	00001.000	0222222-7408	NETWORK-SN7408N	EA
0008A			Z18	
0009	00001.000	0222222-7410	NETWORK SN7410N - 3-000	EA
0009A			Z6 - 3-000	
0010	00001.000	0222222-7425	NETWORK SN7425N	EA
0010A			Z25	
0011	00001.000	0222222-7451	NETWORK SN7451N - SN-451N	EA
0011A			Z1 - SN-451N	
0012	00004.000	0222222-7474	NETWORK SN7474N - 3-000	EA
0012A			Z5 Z7 Z11 Z12 - 3-000	
0013	00001.000	0222222-7486	NETWORK-SN7486N	EA
0013A			Z15	
0015	00001.000	0222222-7107	NETWORK SN74107N	EA
0015A			Z4	
0016	00001.000	0222222-7164	NETWORK SN74164N TI- - SN-4164N	EA
0016A			Z16 TI- - SN-4164N	
0017	00002.000	0222222-7166	NETWORK SN74166N	EA
0017A			Z23 Z26	
0018	00002.000	0222222-7175	NETWORK SN74175N	EA
0018A			Z14 Z20	
0019	00003.000	0222222-7193	NETWORK SN74193N - SN-4193N	EA
0019A			Z21 Z22 Z24 - SN-4193N	
0020	00001.000	0240000-7452	NETWORK-SN74H52N	EA
0020A			Z19	
0021	00012.000	0532736-0002	CAP FIX CERAMIC .02 MF 20/80% 25 VOLT CRL - 2-DU60E203ZAC	EA
0021A			C2 THRU C13 CRL - 2-DU60E203ZAC	
0022	00001.000	0972924-0011	CAP FIX TANT SOLID 68 MFD 10 % 15 VOLT QPL - M3-003/1-2274	EA
0022A			C1 QPL - M3-003/1-2274	
0023	00001.000	0534433-0001	COIL RF 5.60 UH .13 OHM 685 MA LT10K158 QPL - M-90542-14	EA
0023A			L1 QPL - M-90542-14	
0024	00001.000	0972946-0017	RES FIX 10.0 OHM 5 % .25 W.CARBON FILM ROH - R-25	EA
0024A			R1 ROH - R-25	
0025	REF	0969480-9901	DIAG,LGC,DET,DUAL FORMAT R/W CONTROL	EA
0026	REF	0955737-9901	TEST PROGRAM,SPC,TAPE R/W PCB	EA
0027	00004.000	0972736-0014	SOCKET,GLD SPRING,TIN FYLT-.025 PIN DIA	EA
0027A			J1,J2,J3,J4	

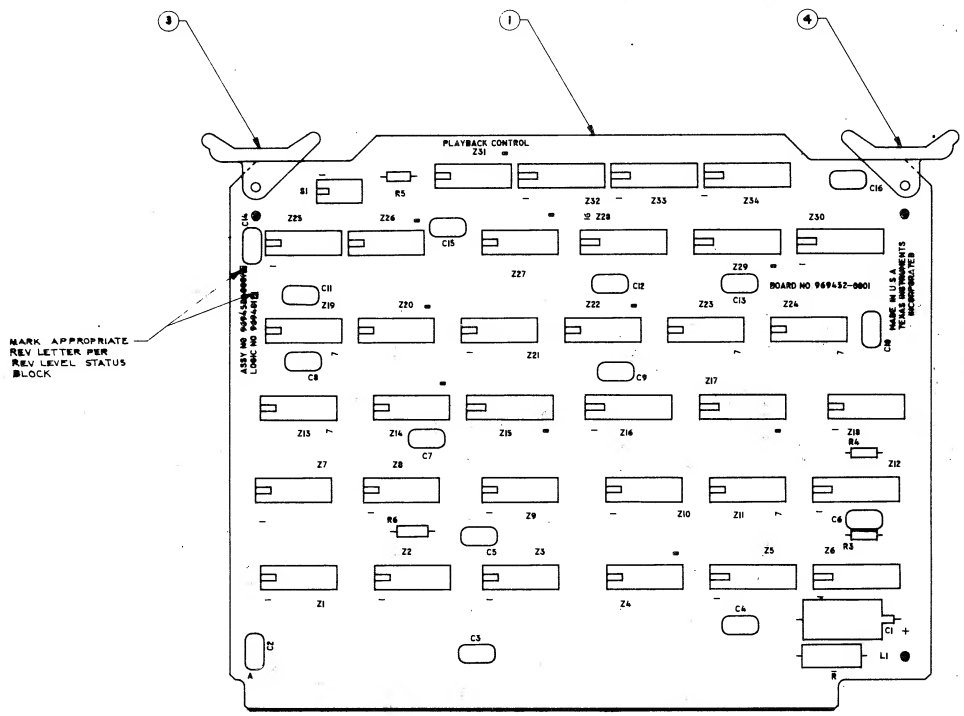

NOTES: UNLESS OTHERWISE SPECIFIED

1) DO NOT CLINCH COMPONENT LEADS.
2) DO NOT SOLDER ON COMPONENT SIDE.
3) MASK ALL CONNECTOR FINGERS ON BOTH SIDES OF BOARD WHEN SOLDERING TO PREVENT SOLDER FROM WICKING DOWN CONNECTOR FINGERS.
4) EJECTORS (ITEMS 3 AND 4) ARE TO BE INSTALLED AFTER WAVE SOLDERING.
5) MAXIMUM COMPONENT HEIGHT FROM COMPONENT SIDE OF BOARD IS .375
6) MAXIMUM LEAD LENGTH FROM CONDUCTOR SIDE OF BOARD IS .062.
7) SWITCH S1 IS DEFINED AS SHOWN BELOW.

FUNCTION	SWITCH S1		
	POSITION	CLOSED (ON)	OPEN (OFF)
FORMAT	1	BINARY	STD *
FORMAT	2	STD *	BINARY
SPARE	3	———	———
READ ERROR	4	STOP *	IGNORE

* INDICATE NORMAL POSITION

LTR	DESCRIPTION	DATE	APPD
A	B.J. Mann 7-30-73 1) UPDATED LM	11/4/73	[illegible]
	FORMAL RELEASE		
B	351314 (E) [illegible] 7-24-74 UPDATED REV LEVEL BLOCK	7-26-74	[illegible]
C	393770 (D) [illegible] 8-6-74 ITEM 18 P/N WAS 772045-0001 UPDATED REVISION LEVEL BLOCK	8/8/74	[illegible]
D	396772 (D) [illegible] 8-19-74 1) UPDATED REV LEVEL BLOCK. 2) ON LM, CHANGED ITEM 21, WAS P/N 220906-0000, QTY 1	8/19/74	[illegible]
E	403492 (E) 12-18-74 [illegible] 1. CHG P/N IT. 19 WAS 772923-0001. UPDATED REVISION LEVEL BLOCK.	12/19/74	[illegible]

REVISION LEVEL											
PRINTED WIRING BOARD 969452-0001	A	B	C	D	E	F	G	G	G	G	
~~LOGIC DIAGRAM FOR -0001 ASSY (969481-0001)~~											
LOGIC DIAGRAM FOR -0001 ASSY (969481-0001)	A	A	B	B	B	B	B	C	C	C	
ASSEMBLY 969453-0001	B	A	A	A	A	A	B	C	D	E	

-0002	-0001	ITEM NO	UNIT OF ISSUE	DWG SIZE	PART NUMBER	DESCRIPTION	VENDOR PART NUMBER
QTY REQD						LIST OF MATERIALS	

UNLESS OTHERWISE SPECIFIED
DECIMAL .XX ± .02 .XXX ± .010
FRACTIONAL ±1/64 ANGULAR ± 1
CONCENTRICITY MACHINED DIAMETERS .004 TIR
ALL DIMENSIONS TO BE MET BEFORE PLATING
REMOVE ALL BURRS AND SHARP EDGES
DO NOT SCALE THIS DRAWING
ALL DIMENSIONS IN INCHES
SURFACES MARKED ✓ TO HAVE
DRILLED HOLE TOLERANCES
.013 TO .136 ± .005 .136 TO .230 ± .005
.230 AND ABOVE ± .004

FRACTIONS
1. WAVE SOLDER F-124 AND (OR) SOLDER PER F-127
2. RUBBER STAMP, F-100, HEIGHT .09, COLOR BLACK

PART NO.	SIZE	PART NO.
8726	E	959349

TEXAS INSTRUMENTS INCORPORATED INDUSTRIAL PRODUCTS DIVISION HOUSTON, TEXAS

TITLE DUAL FORMAT PLAYBACK CONTROL

SCALE 700 ABS

SHEET 2/1 D 969453 E

LM FILMED

PART NUMBER	REV	DESCRIPTION
0969453-0001	E	DUAL FORMAT PLAYBACK CONTROL

ITEM.	QUANTITY.	COMPONENT..	DESCRIPTION	UM
0001	00001.000	0969452-0001	PWB,DUAL FORMAT PLAY BACK CONT	EA
0002	00004.000	0972946-0072	RES FIX 2.0K OHM 5 % .25 W CARBON FILM ROH - R-25	EA
0002A			R3,R4,R5,R6 ROH - R-25	
0003	00001.000	0533887-0003	EJECTOR,PCB,NON-LOCKING,BLACK SCA - S--02 BLACK	EA
0004	00001.000	0533887-0019	EJECTOR,PCB,NON-LOCKING,YELLOW SCA - S-202 YELLOW	EA
0005	00004.000	0222222-7400	NETWORK SN7400N - 3-000	EA
0005A			Z9,Z13,Z20,Z23 - 3-000	
0006	00004.000	0222222-7402	NETWORK SN7402N TI- - SN-402N	EA
0006A			Z1,Z2,Z11,Z27 TI- - SN-402N	
0007	00001.000	0222222-7403	NETWORK SN7403N	EA
0007A			Z3	
0008	00003.000	0222222-7404	NETWORK SN7404N	EA
0008A			Z4,Z14,Z18	
0009	00002.000	0222222-7410	NETWORK SN7410N - 3-000	EA
0009A			Z7,Z21 - 3-000	
0010	00001.000	0222222-7420	NETWORK SN7420N - SN-420N	EA
0010A			Z26 - SN-420N	
0011	00001.000	0222222-7425	NETWORK SN7425N	EA
0011A			Z25	
0012	00001.000	0222222-7427	NETWORK SN7427N TI- - SN-427N	EA
0012A			Z10 TI- - SN-427N	
0013	00002.000	0222222-7451	NETWORK SN7451N - SN-451N	EA
0013A			Z22,Z24 - SN-451N	
0014	00003.000	0222222-7474	NETWORK SN7474N - 3-000	EA
0014A			Z8,Z19,Z31 - 3-000	
0015	00001.000	0222222-7166	NETWORK SN74166N	EA
0015A			Z5	
0016	00004.000	0222222-7175	NETWORK SN74175N	EA
0016A			Z15,Z16,Z17,Z28	
0017	00004.000	0222222-7193	NETWORK SN74193N - SN-4193N	EA
0017A			Z6,Z12,Z29,Z30 - SN-4193N	
0018	00003.000	0219402-7201	NETWORK SN74S201N	EA
0018A			Z32,Z33,Z34	
0019	00001.000	0972594-0001	SWITCH,ROCKER-PWB MOUNTED	EA
0019A			S1	
0020	00015.000	0532736-0002	CAP FIX CERAMIC .02 MF 20/80% 25 VOLT CRL - 2-DU60F203ZAC	EA
0020A			C2 THRU C16 CRL - 2-DU60F203ZAC	
0021	00001.000	0972924-0011	CAP FIX TANT SOLID 68 MFD 10 % 15 VOLT QPL - M3-003/1-2274	EA
0021A			C1 QPL - M3-003/1-2274	
0022	00001.000	0538433-0001	COIL RF 5.60 UH .13 OHM 885 MA LTIOK158 QPL - M-90542-14	EA
0022A			L1 QPL - M-90542-14	
0025	REF	0957735-9901	TEST PROGRAM,SPD-P/C PCB	EA

LTR	DESCRIPTION	DATE	APPD
A	382757	8-1-73	
LM	IT. 25 QTY WAS 12 (2) IT 25 A DELETED RI		
B	379708 (B)	9-24-73	
	1. ADDED NOTE # 9, UPDATED REV LEVEL BLOCK		
	FORMAL RELEASE		

NOTES UNLESS OTHERWISE SPECIFIED

1) DO NOT CLINCH COMPONENT LEADS
2) DO NOT SOLDER ON COMPONENT SIDE
3) MASK ALL CONNECTOR FINGERS ON BOTH SIDES OF BOARD WHEN SOLDERING TO PREVENT SOLDER FROM WICKING DOWN CONNECTOR FINGERS
4) EJECTORS (ITEMS 27 AND 28) ARE TO BE INSTALLED AFTER WAVE SOLDERING
5) MAXIMUM COMPONENT HEIGHT FROM COMPONENT SIDE OF BOARD IS .375
6) MAXIMUM LEAD LENGTH FROM CONDUCTOR SIDE OF BOARD IS .062
7) SWITCHES (ITEMS 22 AND 23) ARE TO BE INSTALLED AFTER WAVE SOLDERING. TO PREVENT DAMAGE, SOLDER WITH LEVER IN POSITION SHOWN
8) R12 IS NOT INSTALLED DURING ASSY
9) RESISTOR R17 (ITEM 26) IS TO BE INSTALLED AFTER WAVE SOLDERING. R17 INSTALLED BETWEEN J3 & J4. FOR THE BINARY FORMAT CONFIGURATION INSTALL RESISTOR R17 BETWEEN J1 & J2.

REVISION LEVEL				
PRINTED WIRING BOARD 969454-0001	A	A	B	C
~~LOGIC DIAGRAM FOR -0002 ASSY~~				
LOGIC DIAGRAM FOR -0001 ASSY 1969482-99011	*	A	B	B
ASSEMBLY 969455-0001	*	*	A	B

UNLESS OTHERWISE SPECIFIED: DECIMAL .XX .02 .XXX .010; FRACTIONAL ± .04 ANGULAR ± 1°; CONCENTRICITY MACHINED DIAMETERS .004 TIR; ALL DIMENSIONS TO BE MET BEFORE PLATING; REMOVE ALL BURRS AND SHARP EDGES; DO NOT SCALE THIS DRAWING; ALL DIMENSIONS IN INCHES; SURFACES MARKED ✓ TO HAVE

DRILLED HOLE TOLERANCES: .013 TO .136 .003/.002; .136 TO .250 .003/.003; .250 AND ABOVE .005

PROCESSES
1 WAVE SOLDER F-124 AND (OR) SOLDER PER F-127
2 RUBBER STAMP, F-100, HEIGHT .09, COLOR BLACK

PROJ NO	SIZE	NEXT ASSY DWG NO
8726	E	960972
8726	E	960973

LIST OF MATERIALS

TEXAS INSTRUMENTS INCORPORATED
INDUSTRIAL PRODUCTS DIVISION
HOUSTON, TEXAS

TITLE: ASCII TRANSMIT RECEIVE DUAL FORMAT

SYSTEM 700 ASR SCALE 2/1 D 969455 REV B

LM

PART NUMBER	REV	DESCRIPTION
0969455-0001	B	ASCII TRANSMIT/RECEIVE,DUAL FORMAT

ITEM.	QUANTITY.	COMPONENT..	DESCRIPTION	UM
0001	00001.000	0969454-0001	PWB,ASCII XMT/RCV-DUAL FORMAT	EA
0003	00001.000	0972924-0012	CAP FIX TANT SOLID 150 MFD 10 % 15 VOLT QPL - M3-003/1-2277	EA
0003A			C1 QPL - M3-003/1-2277	
0004	00011.000	0532736-0002	CAP FIX CERAMIC .02 MF 20/80% 25 VOLT CRL - 2-0U60E203ZAC	EA
0004A			C2 THRU C12 CRL - 2-0U60E203ZAC	
0005	00001.000	0538433-0001	COIL RF 5.60 UH .13 OHM 885 MA LT10K158 QPL - M-90542-14	EA
0005A			L1 QPL - M-90542-14	
0006	00001.000	0972965-0016	CAP FIX CERAMIC .022 MF 10% 100V QPL - C-068X223K	EA
0006A			C13 QPL - C-068X223K	
0007	00004.000	0222222-7400	NETWORK SN7400N - 3-000	EA
0007A			Z3,Z6,Z8,Z23 - 3-000	
0008	00002.000	0222222-7402	NETWORK SN7402N TI- - SN-402N	EA
0008A			Z12,Z5 TI- - SN-402N	
0009	00001.000	0222222-7403	NETWORK SN7403N	EA
0009A			Z7	
0010	00002.000	0222222-7404	NETWORK SN7404N	EA
0010A			Z9,Z18	
0011	00004.000	0222222-7474	NETWORK SN7474N - 3-000	EA
0011A			Z4,Z17,Z25,Z26 - 3-000	
0012	00003.000	0222222-7497	NETWORK SN7497N	EA
0012A			Z15,Z16,Z19	
0013	00002.000	0222222-7161	NETWORK SN74161N - SN-4161N	EA
0013A			Z13,Z14 - SN-4161N	
0014	00001.000	0222222-7492	NETWORK-SN7492N	EA
0014A			Z2	
0015	00002.000	0222222-7197	NETWORK SN74197N	EA
0015A			Z11,Z20	
0016	00001.000	0222222-7193	NETWORK SN74193N - SN-4193N	EA
0016A			Z27 - SN-4193N	
0017	00002.000	0222222-7164	NETWORK SN74164N TI- - SN-4164N	EA
0017A			Z21,Z24 TI- - SN-4164N	
0018	00002.000	0222222-7165	NETWORK SN74165N	EA
0018A			Z22,Z25	
0019	00001.000	0537948-0001	NETWORK SN75150P TI - SN-5150P	EA
0019A			Z10 TI - SN-5150P	
0020	00001.000	0537947-0001	NETWORK SN75154N TI - SN-5154N	EA
0020A			Z1 TI - SN-5154N	
0021	00001.000	0538031-0006	CRYSTAL UNIT QUARTZ 13.5168 MHZ .005% MIL - CR-3A/U13.5168	EA
0021A			Y1 MIL - CR-3A/U13.5168	
0022	00001.000	0235722-0006	SWITCH SUBMINI. TOGGLE 2 POSITION - C-CT8201	EA

PART NUMBER	REV	DESCRIPTION
0969455-0001	B	ASCII TRANSMIT/RECEIVE,DUAL FORMAT

ITEM.	QUANTITY.	COMPONENT..	DESCRIPTION	UM
0022A			S2 - C-CT8201	
0023	00002.000	0235665-1075	SWITCH SUBMINI TOGGLE-CENTER OFF - C-CT8206	EA
0023A			S1, S3 - C-CT8206	
0024	00002.000	0972946-0057	RES FIX 470 OHM 5 % .25 W CARBON FILM ROH - R-25	EA
0024A			R2,R5 ROH - R-25	
0025	00011.000	0972946-0072	RES FIX 2.0K OHM 5 % .25 W CARBON FILM ROH - R-25	EA
0025A			R3,R4,R6,R7,R8,R9,R10,R13 ROH - R-25	
0025B			R14,R15,R16 ROH - R-25	
0026	00002.000	0972946-0017	RES FIX 10.0 OHM 5 % .25 W.CARBON FILM ROH - R-25	EA
0026A			R11,R17 ROH - R-25	
0027	00001.000	0413277-0001	EJECTOR,PCB,NON-LOCKING,WHITE SCA - S--00(NATURAL)	EA
0028	00001.000	0413277-0009	EJECTOR,PCB,NON-LOCKING,D.GREEN SCA - S--00(D.GREEN)	EA
0029	AR	0411400-0020	WIRE #20 ELECTRO-TIN-PLATED,COPPER	FT
0030	REF	0969482-9901	DIAG,LGC,DET,ASCII XMT/RCV-DUAL FORMAT	EA
0031	REF	0955736-9901	TEST PROGRAM,SPD-ASCII XMIT/RCV PCB	EA
0032	00001.000	0222222-7111	NETWORK SN74111N	EA
0032A			Z24	
0033	00004.000	0539493-0001	RECEPTACLE ACCEPTS LEAD SIZE.018-.040GLD AMP - 1--80737-0	EA
0033A			J1,J2,J3,J4 AMP - 1--80737-0	

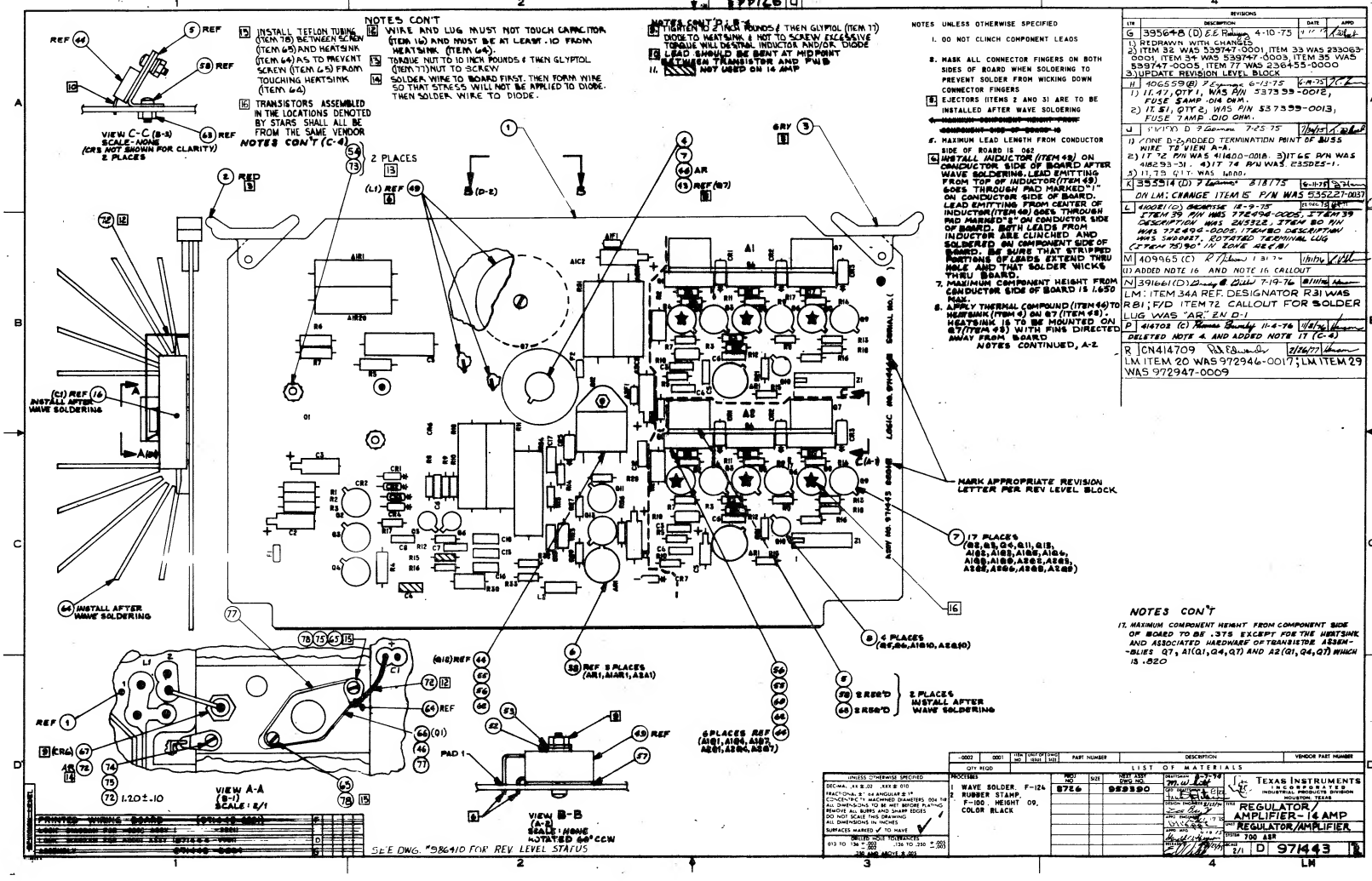

LTR	DESCRIPTION	DATE	APPD
G	395648 (D) E.E. Rawlings 4-10-75	4-11-75	
	1) REDRAWN WITH CHANGES 2) ITEM 33 WAS 539747-0001, ITEM 33 WAS 233063-0001, ITEM 34 WAS 539747-0003, ITEM 35 WAS 539747-0005, ITEM 77 WAS 236455-0000 3) UPDATE REVISION LEVEL BLOCK		
H	406559(B) P Seymour 6-13-75	6-19-75	
	1) I1, A1, QTY 1, WAS P/N 537399-0012, FUSE 3AMP .014 OHM. 2) I7, B1, QTY 2, WAS P/N 537399-0013, FUSE 7 AMP .010 OHM.		
J	5-WIFY) D Seymour 7-25-75	7/24/75	
	1) ADDED D-2 ADDED TERMINATION POINT OF BUSS WIRE TI VIEW A-A. 2) I7 T2 P/N WAS 411400-0018. 3) IT 66 P/N WAS 418293-31. 4) IT 74 P/N WAS 235025-1. 5) I1, T5 QTY WAS 1000.		
K	395514 (D) P Seymour 8/8/75	8-11-75	
	ON LM; CHANGE ITEM 15 P/N WAS 535227-0037		
L	406870(D) Rejection 10-9-75	10-14-75	
	ITEM 39 P/N WAS 772496-0005, ITEM 39 DESCRIPTION WAS 243928, ITEM 80 P/N WAS 772496-0005, ITEM 80 DESCRIPTION WAS SM0002T, ROTATED TERMINAL LUG (ITEM 78) 90° IN ZONE 4E & 8I		
M	409965 (C) R Wilson 1 31 76	1/31/76	
	(1) ADDED NOTE 16 AND NOTE 16 CALLOUT		
N	391661(D) Bradley Dillard 7-19-76	8/11/76	
	LM: ITEM 34A REF. DESIGNATOR R31 WAS R81; F/D ITEM 72 CALLOUT FOR SOLDER LUG WAS "AR" EN D-1		
P	414702 (C) Thomas Bradley 11-4-76	11/4/76	
	DELETED NOTE 4 AND ADDED NOTE 17 (C-4)		
R	CN414709 D Edwards	2/16/77	
	LM ITEM 20 WAS 972946-0017; LM ITEM 29 WAS 972947-0009		

-0002 QTY REQD	0001	ITEM NO.	UNIT OF ISSUE	SIZE	PART NUMBER	DESCRIPTION	VENDOR PART NUMBER
						LIST OF MATERIALS	
		1	EA		8726	WAVE SOLDER, F-124	
		2	EA		929390	RUBBER STAMP, F-100 HEIGHT .09, COLOR BLACK	

UNLESS OTHERWISE SPECIFIED
DECIMAL .XX ± .02 .XXX ± .010
FRACTIONAL ± 1/64 ANGULAR ± 1°
CONCENTRICITY MACHINED DIAMETERS .004 TIR
ALL DIMENSIONS TO BE HIT BEFORE PLATING
REMOVE ALL BURRS AND SHARP EDGES
DO NOT SCALE THIS DRAWING
ALL DIMENSIONS IN INCHES
SURFACES MARKED ✓ TO HAVE
DRILLED HOLE TOLERANCES
.013 TO .136 +.003 -.003 .136 TO .250 +.005 -.005
.250 AND ABOVE ± .005

PROCESSES

Texas Instruments INCORPORATED INDUSTRIAL PRODUCTS DIVISION HOUSTON, TEXAS

TITLE REGULATOR/ AMPLIFIER-16 AMP REGULATOR/AMPLIFIER

SYSTEM 700 ASR

SIZE D DWG NO. 971443

SHEET 2/1

LM

MARCH 11, 1977 L I S T O F M A T E R I A L

PART NUMBER	REV	DESCRIPTION.....
0971443-0001	R	REGULATOR/AMPLIFIER-14AMP

ITEM.	QUANTITY.	COMPONENT..	DESCRIPTION.....	UM
0001	00001.000	0971442-0001	PWB,14 AMP REG-AMP	EA
0002	00001.000	0413277-0015	EJECTOR,PCB,NON-LOCKING,C.RED	EA
			SCA - S--00(C.RED)	
0003	00001.000	0413277-0006	EJECTOR,PCB,NON-LOCKING,GRAY	EA
			SCA - S--00(GRAY)	
0004	00001.000	0419368-0002	HEATSINK,TRANSISTOR	EA
			WAK - N--207	
0005	00002.000	0959319-0001	BRACKET,TRANSISTOR MTG	EA
			L210-9319-033	
0006	00003.000	0232583-0005	PAD INTEGRATED CKT.TO-5 8 LEADS .350 DIA	EA
			THR - 77-7-107-N-WHT	
0007	00018.000	0232583-0008	PAD XST MTG TO-5 WHT	EA
			THR - 77-7-4N	
0008	00004.000	0185113-0001	X SPACER XST TO-18 CASE	EA
			* - -	
0009	00001.000	0972924-0006	CAP FIX TANT SOLID 39 MFD 10 % 10 VOLT	EA
			QPL - M3-003/1-2259	
0009A			C11	
			QPL - M3-003/1-2259	
0010	00001.000	0972929-0379	CAP FIX CERAMIC 100 PF 10 % 200 V	EA
			QPL - M3-014/01-1379	
0010A			C6	
			QPL - M3-014/01-1379	
0011	00001.000	0972929-0397	CAP FIX CERAMIC .001 UF 10% 200V	EA
			QPL - M3-014/01-1397	
0011A			C7	
			QPL - M3-014/01-1397	
0012	00001.000	0058023-0013	CAP FIX .047 MFD 5 % 100V MYLAR FOIL	EA
			TRW - 6-3UW	
0012A			C5	
			TRW - 6-3UW	
0013	00011.000	0972965-0020	CAP FIX CERAMIC .047 MF 10% 100V	EA
			QPL - C-06BX473K	
0013A			C12 C13 C15 C16 A1C3 THRU	
			QPL - C-06BX473K	
0013B			A1C6 A2C3 A2C4 A2C6	
			QPL - C-06BX473K	
0014	00001.000	0972924-0013	CAP FIX TANT SOLID 2.2 MFD 10 % 20 VOLT	EA
			QPL - M3-003/1-2283	
0014A			A2C5	
			QPL - M3-003/1-2283	
0015	00004.000	0972924-0026	CAP FIX TANT SOLID 3.9 MFD 10 % 75 VOLT	EA
			QPL - M3-003/1-2411	
0015A			C2 C3 A1C2 A2C2	
			QPL - M3-003/1-2411	
0016	00001.000	0539727-0001	CAPACITOR 100.00 MF 65V	EA
			SAN - 55-EJ101W065B	
0016A			C1	
			SAN - 55-EJ101W065B	
0017	00005.000	0972932-0001	DIODE,1N914B SWITCHING 75V P1V 75MA 4NS	EA
			TI - I-914B	
0017A			CR1 THRU CR4 CR7	
			TI - I-914B	
0018	00007.000	0972268-0002	DIODE 1N4934-1 AMP	EA
			MOT - 1-4934	
0018A			A1CR1 THRU A1CR3 A2CR1 THRU	
			MOT - 1-4934	
0018B			A2CR3 CR5	
			MOT - 1-4934	
0019	00003.000	0972947-0003	RES FIX 2.7 OHM 5 % .5 W CARBON FILM	EA
			ROH - R-50	
0019A			R1 R2 R3	
			ROH - R-50	
0020	00007.000	0972976-0039	RES,FIX 10 OHMS 5% 0.25W CARBON COMP.	EA
			8134-R CR-7G2100JS	
0020A			R28 A1R6 A2R6 A1R11 A2R11	
			8134-R CR-7G2100JS	
0020B			A1R17 A2R17	
			8134-R CR-7G2100JS	
0021	00007.000	0972946-0037	RES FIX 68.0 OHM 5 % .25 W.CARBON FILM	EA
			ROH - R-25	
0021A			A1R7 A2R7 A1R12 A2R12 A1R18	
			ROH - R-25	
0021B			A2R18 R10	
			ROH - R-25	
0022	00009.000	0972946-0039	RES FIX 82.0 OHMS 5 % .25 W CARBON FILM	EA
			ROH - R-25	
0022A			R13 R14 A1R4 A2R4 A1R9 R27	
			ROH - R-25	

PART NUMBER REV DESCRIPTION.....
0971443-0001 R REGULATOR/AMPLIFIER-14AMP

ITEM.	QUANTITY.	COMPONENT..	DESCRIPTION.....	UM
0022B			A2R9 A1R14 A2R14	
			ROH - R-25	
0023	00007.000	0972946-0043	RES FIX 120 OHM 5 % .25 W CARBON FILM	EA
			ROH - R-25	
0023A			R29,A1R3,A2R3,A1R8,A2R8,	
			ROH - R-25	
0023B			A1R13,A2R13	
			ROH - R-25	
0024	00005.000	0972946-0061	RES FIX 680 OHM 5 % .25 W CARBON FILM	EA
			ROH - R-25	
0024A			R9 A1R15 A2R15 A1R16 A2R16	
			ROH - R-25	
0025	00005.000	0972946-0073	RES FIX 2.2K OHM 5 % .25 W CARBON FILM	EA
			ROH - R-25	
0025A			A1R5 A2R5 R33 A1R21 A2R21	
			ROH - R-25	
0026	00003.000	0539370-0425	RES FIX FILM 2.61K OHM 1% .25 WATT	EA
			COR - N-55	
0026A			R25 A1R10 A2R10	
			COR - N-55	
0027	00003.000	0972946-0093	RES FIX 15K OHM 5% .25 W CARBON FILM	EA
			ROH - R-25	
0027A			A1R19 A2R19 R32	
			ROH - R-25	
0028	00001.000	0972946-0107	RES FIX 56 K OHM 5 % .25 W CARBON FILM	EA
			ROH - R-25	
0028A			R16	
			ROH - R-25	
0029	00001.000	0972977-0237	RES,FIX COMP 4.7 OHMS 1/2W 5%	EA
			0813-9 -	
0029A			R5	
			0813-9 -	
0030	00001.000	0972947-0041	RES FIX 100 OHM 5% .5 W CARBON FILM	EA
			ROH - R-50	
0030A			R4	
			ROH - R-50	
0031	00002.000	0972947-0061	RES FIX 680 OHM 5% .5 W CARBON FILM	EA
			ROH - R-50	
0031A			R6 R7	
			ROH - R-50	
0032	00003.000	0972554-0006	RESISTOR,FIXED,WIREWOUND .5 OHM 3W 1%	EA
			SEE - T- DRAWING	
0032A			A1R2 A2R2 R30	
			RCL - T--2A	
0033	00003.000	0972554-0001	RESISTOR,FIXED,WIREWOUND.1 OHM 5W 5%	EA
			SEE - T- DRAWING	
0033A			R11 R24 R18	
			IRC - A--5	
0034	00002.000	0972554-0008	RESISTOR,FIXED,WIREWOUND 7.5 OHM 7W 1%	EA
			SEE - T- DRAWING	
0034A			A2R1 R31	
			SEE - T- DRAWING	
0035	00002.000	0972554-0009	RESISTOR,FIXED,WIREWOUND 30 OHM 7W 1%	EA
			SEE - T- DRAWING	
0035A			A1R1 A1R20	
			RCL - TR-7	
0036	00002.000	0222222-7438	NETWORK SN7438N	EA
0036A			A1Z1 A2Z1	
0037	00002.000	0972225-0510	CAP 1 MF 50V +80-20% CERAMIC	EA
0037A			C17 C18	
0038	00003.000	0222225-0311	NETWORK LM311H	EA
0038A			A1AR1 A2AR1 AR1	
0039	00006.000	0772494-0005	TRANSISTOR SWD0027	EA
			SEE - T- DRAWING	
0039A			A1Q2,A1Q5,A1Q8,A2Q2,A2Q5,	
			SEE - T- DRAWING	
0039B			A2Q8,	
			SEE - T- DRAWING	
0040	00001.000	0972958-0002	TRANSISTOR,2N2907A PNP GEN PURP SW TO-18	EA
			TI - 2-2907A	
0040A			Q5	
			TI - 2-2907A	
0041	00001.000	0972958-0001	TRANSISTOR, PNP,GEN.PURP.SW TO-5	EA
			TI - 2-2905A	

MARCH 11, 1977 LIST OF MATERIAL

PART NUMBER REV DESCRIPTION.....
0971443-0001 R REGULATOR/AMPLIFIER-14AMP

ITEM.	QUANTITY.	COMPONENT..	DESCRIPTION.....	UM
0041A			Q11	
			TI - 2-2905A	
0042	00001.000	0972948-0002	TRANSISTOR,2N2222A NPN GEN PURP SW TO-18	EA
			TI - 2-2222A	
0042A			Q6	
			TI - 2-2222A	
0043	00008.000	0972954-0001	TRANSISTOR,2N2102 NPN 65V 5W TO-5	EA
			TI - 2-2102	
0043A			Q7 A1Q3 A2Q3 A1Q6 A2Q6 A1Q9	
			TI - 2-2102	
0043B			A2Q9 Q13	
			TI - 2-2102	
0044	00007.000	0972008-0001	TRANSISTOR,TIP3055-POWER,SILICON,NPN	EA
			TI- - TI-3055	
0044A			A1Q1,A2Q1,A1Q4,A2Q4,A1Q7,	
			TI- - TI-3055	
0044B			A2Q7,Q12	
			TI- - TI-3055	
0045	00002.000	0972955-0001	XSTR 2N2369A,NPN,HIGH SPEED SW,TO-18	EA
			MOT - 2-2369A	
0045A			A1Q10 A2Q10	
			MOT - 2-2369A	
0046	AR	0415886-0001	GREASE,SILICONE,HEAT COND. (8 OZ TUBE)	EA
			WAK - 1-G	
0047	00001.000	0537399-0013	FUSE 7AMP .010 OHM	EA
			LIT - -2-6007	
0047A			F1	
			LIT - -2-6007	
0048	00001.000	0537399-0007	FUSE 1.0 A 125V RADIAL LEAD	EA
			LIT - 2-6.001	
0048A			F2	
			LIT - 2-6.001	
0049	00001.000	0959335-0002	INDUCTOR,5V REGULATOR	EA
0049A			L1	
0050	00001.000	0538428-0004	COIL RF 10.0 UH .90 OHM 290 MA LT10K131	EA
			QPL - M-14046-04	
0050A			L2	
			QPL - M-14046-04	
0051	00002.000	0537399-0010	FUSE 3AMP	EA
			LIT - 27-003	
0051A			A1F1 A2F1	
			LIT - 27-003	
0052	00001.000	0234866-0100	RING O 7/32X11/32X1/16	EA
			P-K - 2--09-N219-7	
0053	00001.000	0416622-0033	WASHER #10 FLAT	EA
			QPL - A-960C10L	
0054	00002.000	0411101-0058	LOCKWASHER #6 EXTERNAL TOOTH CRES	EA
			QPL - M-35335-58	
0055	00007.000	0972988-0014	SCREW 4-40 X .312 PAN HEAD CRES	EA
0056	00007.000	0411101-0057	LOCKWASHER # 4 EXTERNAL TOOTH CRES	EA
			QPL - M-35335-57	
0057	00001.000	0959254-0001	INSULATOR	EA
			1210-9254-015	
0058	00004.000	0418653-0013	SCREW 4-40 UNC-2A X .250 PAN HEAD NYLON	EA
			QPL - M-18212-13	
0059	REF	0971444-9901	DIAGRAM,LOGIC,DET,REG/AMP 14AMP	EA
0060	00006.000	0416622-0011	WASHER #4 FLAT	EA
			QPL - A-960C4L	
0061	REF	0962323-9901	PROGRAM TEST,14 REG/AMP	EA
0062	00007.000	0411115-0044	NUT,4-40 HEXAGON CRES STEEL	EA
			MS - 35-49-244	
0063	00004.000	0232451-0000	NUT 4-40 NYLON	EA
0064	00001.000	0971458-0001	SINKHEAT,14AMP REG-AMP	EA
			1210-1458-022	
0065	00002.000	0972988-0032	SCREW 6-32 X .750 PAN HEAD CRES	EA
0066	00001.000	0972238-0001	TRANSISTOR,2N6338	EA
			MOT - -2-6338	
0066A			Q1	
			MOT - -2-6338	
0067	00001.000	0972116-0003	DIODE UTG1250 (MAY USE UES302R/UES303R)	EA
			UNT - -U-G 1250	
0067A			CR6	
			UNT - -U-G 1250	

MARCH 11, 1977 LIST OF MATERIAL

PART NUMBER	REV	DESCRIPTION
0971443-0001	R	REGULATOR/AMPLIFIER-14AMP

ITEM.	QUANTITY.	COMPONENT..	DESCRIPTION	UM
0068	00003.000	0971453-0001	XSTR-SELECTED 2N5322 1210-1453-001	EA
0068A			Q2 Q3 Q4 1210-1453-001	
0069	00002.000	0972946-0025	RES FIX 22.0 OHM 5 % .25 W.CARBON FILM ROH - R-25	EA
0069A			R8 R12 ROH - R-25	
0070	00001.000	0972965-0024	CAP FIX CERAMIC .100 MF 10% 100V QPL - C-068X104K	EA
0070A			C8 QPL - C-068X104K	
0071	00001.000	0972946-0035	RES FIX 56.0 OHM 5 % .25 W.CARBON FILM ROH - R-25	EA
0071A			R17 ROH - R-25	
0072	00001.200	0457313-0003	WIRE #18 AWG BUS SOLID TEFLON INSULATED	FT
0073	00002.000	0411115-0064	NUT,PLAIN 6-32 UNC-2B HEX CRES QPL - M-35649-264	EA
0074	00002.000	0972988-0014	SCREW 4-40 X .312 PAN HEAD CRES	EA
0075	00002.000	0412257-0004	TERMINAL,LUG #4 12-20 AWG QPL - M-77068-1	EA
0076	00001.000	0972946-0055	RES FIX 390 OHM 5 % .25 W CARBON FILM ROH - R-25	EA
0076A			R26 ROH - R-25	
0077	00001.000	0972567-0001	INSULATOR,TO-3-TRANSISTOR-MICA 1286-2567-000	EA
0078	00000.500	0410499-0013	INSULATION,SLEEVING # 8 NATURAL QPL - M-L-I 22129	FT
0079	AR	0231023-0011	CEMENT GLYPTAL,GE-1201 RED ENAMEL GE - 12-1-RED	EA

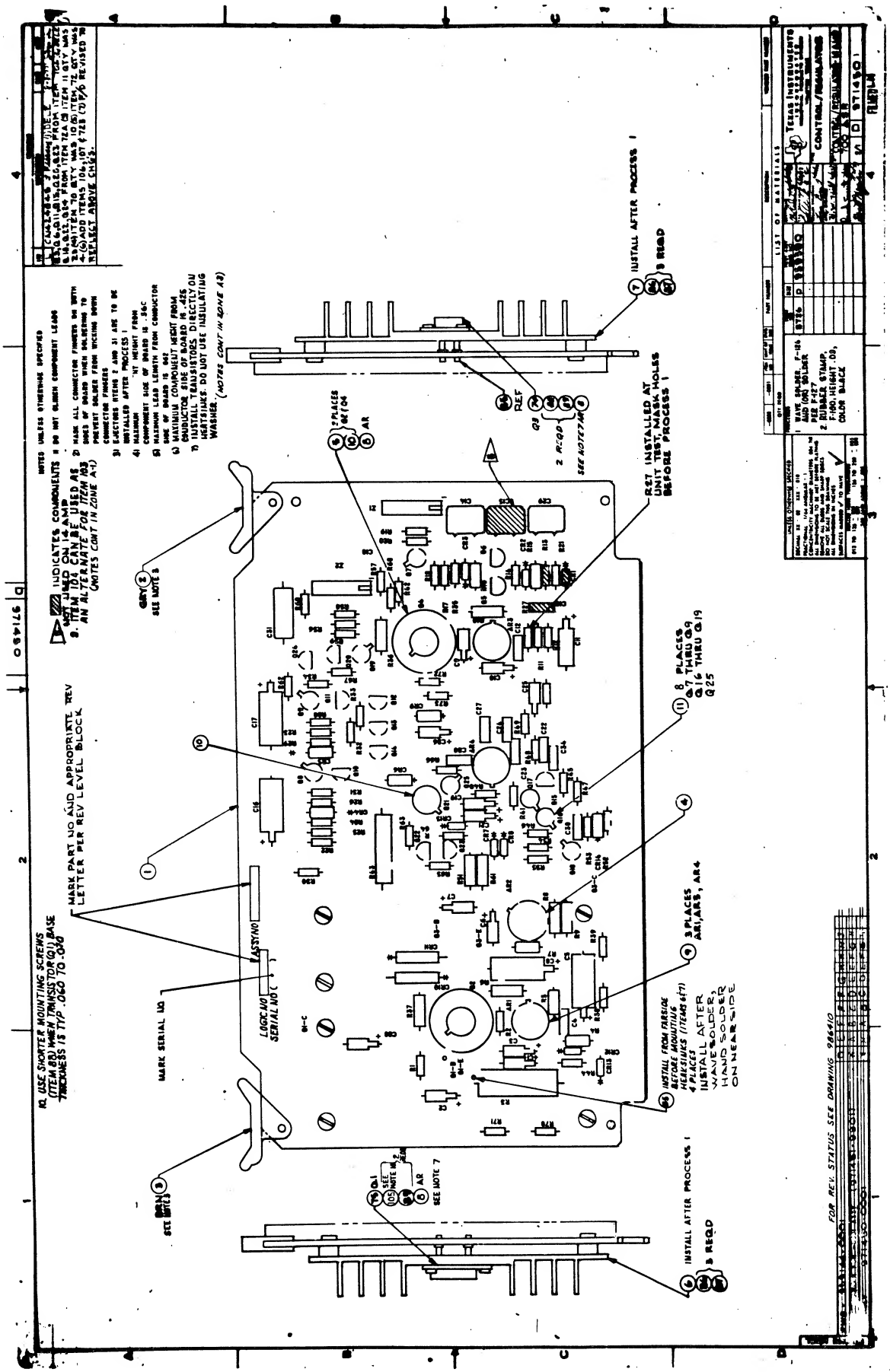

OCTOBER 14, 1977 LIST OF MATERIAL

PART NUMBER REV DESCRIPTION.....
0971450-0001 L CONTROL/REGULATOR-14AMP

ITEM.	QUANTITY.	COMPONENT..	DESCRIPTION.....	UM
0001	00001.000	0959144-0001	PW BOARD,CONTROL/REGULATOR	EA
			1209-9144-000	
0002	00001.000	0413277-0006	EJECTOR,PCB,NON-LOCKING,GRAY	EA
			SCA -S-200(GRAY)	
0003	00001.000	0413277-0014	EJECTOR,PCB,NON-LOCKING,D.BROWN	EA
			SCA -S-200(D.BROWN)	
0004	00001.000	0536687-0001	SPACER,TRANSIPAD	EA
			MR -10050-N	
0005	00002.000	0419253-0003	HEATSINK,TRANSISTOR	EA
			WAK - 205	
0006	00001.000	0959314-0001	HEATSINK,+12V CONTROL/REGULATOR	EA
			1210-9314-042	
0007	00001.000	0959315-0001	HEATSINK,-12V CONTROL/REGULATOR	EA
			1210-9315-039	
0008	AR	0415886-0001	GREASE,SILICONE,HEAT COND. (8 OZ TUBE)	EA
			WAK - 120	
0009	00003.000	0232583-0005	PAD INTEGRATED CKT.TO-5 8 LEADS .350 DIA	EA
			THR -7717-107-N-WHT	
0010	00003.000	0232583-0008	PAD XST MTG TO-5 WHT	EA
			THR -7717-4N	
0011	00008.000	0185113-0001	X SPACER XST TO-18 CASE	EA
			* -	
0012	00001.000	0972965-0024	CAP FIX CERAMIC .100 MF 10% 100V	EA
			QPL - CKC6BX104K	
0012A			C30	
			QPL - CK06BX104K	
0013	00001.000	0972929-0373	CAP FIX CERAMIC 47.0 PF 10 % 200 V	EA
			QPL - M39014/1C-137	
0013A			C12	
			QPL - M39014/1C-137	
0014	00001.000	0972929-0382	CAP 150 PF 10% 200V FXD CER STYLE CKR05	EA
			MIL -C-39014/1C-138	
0014A			C4	
			MIL -C-39014/1C-138	
0015	00002.000	0972927-0052	CAP FIX MICA 500V 430 PF 1%	EA
			QPL -CM05E431F0D	
0015A			C14,C29	
			QPL -CM05E431F0D	
0017	00005.000	0972965-0020	CAP FIX CERAMIC .047 MF 10% 100V	EA
			QPL - CKC6BX473K	
0017A			C18,C20,C23,C24,C27	
			QPL - CK06BX473K	
0018	00001.000	0530713-0021	CAP FIX TANT SOLID .22 MFD 10% 35VOLT	EA
			SPR - 150D224X9035A	
0018A			C2	
			SPR - 150D224X9035A	
0019	00004.000	0972924-0021	CAP FIX TANT SOLID 1.0 MFD 10 % 50 VOLT	EA
			QPL -M39003/1-2356	
0019A			C1,C7,C9,C28	
			QPL -M39003/1-2356	
0020	00006.000	0972924-0013	CAP FIX TANT SOLID 2.2 MFD 10 % 20 VOLT	EA
			QPL -M39003/1-2283	
0020A			C3,C10,C26,C19,C25,C6	
			QPL -M39003/1-2283	
0021	00001.000	0972924-0018	CAP FIX TANT SOLID 6.8 MFD 10 % 35 VOLT	EA
			QPL -M39003/1-2304	
0021A			C11	
			QPL -M39003/1-2304	
0023	00003.000	0972924-0019	CAP FIX TANT SOLID 22 MFD 10 % 35 VOLT	EA
			QPL -M39003/1-2306	
0023A			C5,C8,C16	
			QPL -M39003/1-2306	
0024	00001.000	0972924-0011	CAP FIX TANT SOLID 68 MFD 10 % 15 VOLT	EA
			QPL -M39003/1-2274	
0024A			C17	
			QPL -M39003/1-2274	
0025	00001.000	0058023-0012	CAP FIX .033 MFD 5 % 100V MYLAR FOIL	EA
			TRW - 663UW	
0025A			C31	
			TRW - 663UW	
0027	00002.000	0972164-0002	DIODE,SILICONE,3AMP	EA
0027A			CR10 CR11	
0028	00006.000	0972932-0001	DIODE,1N914B SWITCHING 75V P1V 75MA 4NS	EA
			TI - IN914B	
0028A			CR2,CR3,CR7,CR8,CR12,CR15,	
			TI - IN914B	
0029	00001.000	0972934-0007	DIODE,1N752A 5.6 V 5% SIL VOLT REG	EA
			QPL - 1N752A	

PART NUMBER	REV	DESCRIPTION
0971450-0001	L	CONTROL/REGULATOR-14AMP

ITEM.	QUANTITY.	COMPONENT..	DESCRIPTION	UM
0029A			CR9	
			QPL - 1N752A	
0030	00001.000	0972934-0011	DIODE,1N756A 8.2 V 5% SIL VOLT REG	EA
			QPL - 1N756A	
0030A			CR6	
			QPL - 1N756A	
0031	00002.000	0972934-0014	DIODE,IN759A 12.0 V 5% SIL VOLT REG	EA
			QPL - 1N759A	
0031A			CR4,CR5	
			QPL - 1N759A	
0034	00002.000	0972946-0031	RES FIX 39.0 OHM 5 % .25 W.CARBON FILM	EA
			ROH - R-25	
0034A			R38 R39	
			ROH - R-25	
0035	00001.000	0972946-0037	RES FIX 68.0 OHM 5 % .25 W.CARBON FILM	EA
			ROH - R-25	
0035A			R1	
			ROH - R-25	
0036	00001.000	0972946-0047	RES FIX 180 OHM 5 % .25 W CARBON FILM	EA
			ROH - R-25	
0036A			R29	
			ROH - R-25	
0037	00004.000	0972946-0057	RES FIX 470 OHM 5 % .25 W CARBON FILM	EA
			ROH - R-25	
0037A			R19 R41 R42 R52	
			ROH - R-25	
0038	00005.000	0972946-0065	RES FIX 1.0K OHM 5% .25 W CARBON FILM	EA
			ROH - R-25	
0038A			R18 R22 R45 R60 R65	
			ROH - R-25	
0039	00006.000	0972946-0071	RES FIX 1.8K OHM 5 % .25 W CARBON FILM	EA
			ROH - R-25	
0039A			R14,R17,R40,R50,R58,R68	
			ROH - R-25	
0040	00007.000	0972946-0075	RES FIX 2.7K OHM 5 % .25 W CARBON FILM	EA
			ROH - R-25	
0040A			R20,R26,R33,R48,R57,R59,R66	
			ROH - R-25	
0041	00004.000	0972946-0081	RES FIX 4.7K OHM 5 % .25 W CARBON FILM	EA
			ROH - R-25	
0041A			R25,R3C,R47,R64	
			ROH - R-25	
0042	00003.000	0972946-0089	RES FIX 10K OHM 5% .25 W CARBON FILM	EA
			ROH - R-25	
0042A			R35 R56 R63	
			ROH - R-25	
0043	00001.000	0972946-0093	RES FIX 15K OHM 5% .25 W CARBON FILM	EA
			ROH - R-25	
0043A			R32	
			ROH - R-25	
0044	00003.000	0972946-0097	RES FIX 22 K OHM 5 % .25 W CARBON FILM	EA
			ROH - R-25	
0044A			R23,R24,R28	
			ROH - R-25	
0045	00002.000	0972946-0113	RES FIX 100K OHM 5 % .25 W CARBON FILM	EA
			ROH - R-25	
0045A			R34,R62	
			ROH - R-25	
0046	00001.000	0972946-0117	RES FIX 150K OHM 5 % .25 W CARBON FILM	EA
			ROH - R-25	
0046A			R31	
			ROH - R-25	
0048	00001.000	0972946-0086	RES FIX 7.5K OHM 5 % .25 W CARBON FILM	EA
			ROH - R-25	
0048A			R49	
			ROH - R-25	
0049	00005.000	0972947-0003	RES FIX 2.7 OHM 5 % .5 W CARBON FILM	EA
			ROH - R-50	
0049A			R8 R9 R10 R36 R37	
			ROH - R-50	
0051	00001.000	0972947-0058	RES FIX 510 OHM 5% .5 W CARBON FILM	EA
			ROH - R-50	
0051A			R6	
			ROH - R-50	
0052	00001.000	0972942-0024	RES FIX 1.60 K-OHMS 5% 5 WATT WIREWOUND	EA
			OHM - 995-4628	
0052A			R43	
			OHM - 995-4628	
0053	00002.000	0972947-0068	RES FIX 1.3K OHM 5% .5 W CARBON FILM	EA
			ROH - R-50	
0053A			R51,R61	
			ROH - R-50	
0054	00001.000	0539371-0421	RES FIX FILM 2.37K OHM 1% .13 WATT	EA
			COR - NC4	
0054A			R7	
			COR - NC4	

PART NUMBER	REV	DESCRIPTION
0971450-0001	L	CONTROL/REGULATOR-14AMP

ITEM.	QUANTITY.	COMPONENT..	DESCRIPTION	UM
0055	00001.000	0539370-0433	RES FIX FILM 3.16K OHM 1% .25 WATT	EA
			COR - NA55	
0055A			R12	
			COR - NA55	
0056	00001.000	0539371-0464	RES FIX FILM 6.65K OHM 1% .13 WATT	EA
			COR - NC4	
0056A			R11	
			COR - NC4	
0057	00001.000	0539371-0474	RES FIX FILM 8.45K OHM 1% .13 WATT	EA
			COR - NC4	
0057A			R5	
			COR - NC4	
0058	00001.000	0539370-0488	RES FIX FILM 11.8K OHM 1% .25 WATT	EA
			COR - NA55	
0058A			R4	
			COR - NA55	
0059	00002.000	0539371-0522	RES FIX FILM 26.7K OHM 1% .13 WATT	EA
			COR - NC4	
0059A			R15,R16	
			COR - NC4	
0060	00003.000	0399999-9702	RESISTOR SELECTED AT UNIT TEST	EA
0060A			R27,R70,R71	
0061	00001.000	0972942-0032	RES FIX 0.50 OHMS 3% 5 WATT WIREWOUND	EA
			C-R - SA-50	
0061A			R3	
			C-R - SA-50	
0063	00001.000	0222222-7474	NETWORK SN7474N	EA
			- 3-000	
0063A			Z1	
			- 3-000	
0064	00001.000	0222225-0311	NETWORK LM311H	EA
0064A			AR4	
0065	00002.000	0232426-0100	NETWORK VOLTAGE REGULATOR	EA
			NSC -LM-305	
0065A			AR1,AR3	
			NSC -LM-305	
0066	00001.000	0222224-0304	NETWORK LM304H VOLTAGE REGULATOR	EA
			-LM304H	
0066A			AR2	
			-LM304H	
0068	00003.000	0248490-0073	XST,HI-RELBL N-CHAN FET SKA5731 NKL LEAD	EA
0068A			Q12,Q13,Q14	
0069	00001.000	0972957-0001	TRANSISTOR,2N930A NPN LOW CUR AMP,TO-18	EA
			MOT - 2N930A	
0069A			Q16	
			MOT - 2N930A	
0070	00004.000	0972948-0002	TRANSISTOR,2N2222A NPN GEN PURP SW TO-18	EA
			TI - 2N2222A	
0070A			Q8,Q9,Q17,Q19	
			TI - 2N2222A	
0070B			ITEM 70 MAY BE USED WITH	
			TI - 2N2222A	
0070C			ITEM 11 AS AN ALTERNATE TO	
			TI - 2N2222A	
0070D			ITEM 106	
			TI - 2N2222A	
0071	00002.000	0972955-0001	XSTR 2N2369A,NPN,HIGH SPEED SW,TO-18	EA
			MOT - 2N2369A	
0071A			Q7,Q25	
			MOT - 2N2369A	
0072	00001.000	0972958-0002	TRANSISTOR,2N2907A PNP GEN PURP SW TO-18	EA
			TI - 2N2907A	
0072A			Q18	
			TI - 2N2907A	
0072B			ITEM 72 MAY BE USED WITH	
			TI - 2N2907A	
0072C			ITEM 11 AS AN ALTERNATE TO	
			TI - 2N2907A	
0072D			ITEM 107	
			TI - 2N2907A	
0073	00001.000	0972958-0001	TRANSISTOR, PNP,GEN.PURP.SW TO-5	EA
			TI - 2N2905A	
0073A			Q2	
			TI - 2N2905A	
0074	00001.000	0236091-0015	XST- 2N3740	EA
			MOT -2N3740	
0074A			Q3	
			MOT -2N3740	
0075	00001.000	0972959-0001	TRANSISTOR,2N3055 NPN 70V 115N TO-3	EA
			TI - 2N3055	
0075A			Q1	
			TI - 2N3055	
0077	00001.000	0972946-0017	RES FIX 10.0 OHM 5 % .25 W.CARBON FILM	EA
			ROH - R-25	
0077A			R53	
			ROH - R-25	

PART NUMBER	REV	DESCRIPTION.....
0971450-0001	L	CONTROL/REGULATOR-14AMP

ITEM.	QUANTITY.	COMPONENT..	DESCRIPTION.....	UM
0079	00001.000	0972946-0009	RES FIX 4.7 OHM 5 % .25 W.CARBON FILM	EA
			ROH - R-25	
0079A			R54	
			ROH - R-25	
0080	00001.000	0972946-0029	RES FIX 33.0 OHM 5 % .25 W.CARBON FILM	EA
			ROH - R-25	
0080A			R55	
			ROH - R-25	
0081	00001.000	0972934-0006	DIODE,1N751A 5.1 V 5% SIL VOLT REG	EA
			QPL - 1N751A	
0081A			CR14	
			QPL - 1N751A	
0082	00001.000	0231784-6001	DIODE MPC300 3 PELLET SILICON MULTI	EA
			GE -MPD3C0	
0082A			CR13	
			GE -MPD3C0	
0083	00002.000	0972946-0085	RES FIX 6.8K OHM 5 % .25 W CARBON FILM	EA
			ROH - R-25	
0083A			R44,R72	
			ROH - R-25	
0084	00001.000	0222222-7122	NETWORK SN74122N	EA
0084A			Z2	
0085	00004.000	0539493-0002	RECEPTACLE,ACCEPTS LEAD SIZE.018-.040TIN	EA
			AMP -380635-2	
0086	00006.000	0972988-0013	SCREW 4-40 X .250 PAN HEAD CRES	EA
0087	00006.000	0411101-0057	LOCKWASHER # 4 EXTERNAL TOOTH CRES	EA
			QPL - MS35335-57	
0088	00002.000	0972988-0026	SCREW 6-32 X .250 PAN HEAD CRES	EA
0089	00004.000	0411101-0058	LOCKWASHER #6 EXTERNAL TOOTH CRES	EA
			QPL - MS35335-58	
0090	00001.000	0418288-0001	TRANSISTOR,2N1711	EA
			QPL - 2N1711	
0090A			Q21	
			QPL - 2N1711	
0091	REF	0971451-9901	DIAGRAM,LOGIC,DET-CONT/REG-14AMP	EA
0092	REF	0962324-9901	PROGRAM TEST,CONT/REG-14AMP	EA
0094	00001.000	0972946-0101	RES FIX 33 K OHM 5 % .25 W CARBON FILM	EA
			ROH - R-25	
0094A			R67	
			ROH - R-25	
0096	00001.000	0972946-0137	RES FIX 1.0M OHM 5 % .25 W CARBON FILM	EA
			ROH - R-25	
0096A			R46	
			ROH - R-25	
0097	00001.000	0418356-2347	CAP FIX 0.33 MF 50V 10% TANTALUM SOLID	EA
			QPL -M39003/1-2347	
0097A			C21	
			QPL -M39003/1-2347	
0098	00001.000	0972929-0397	CAP FIX CERAMIC .001 UF 10% 200V	EA
			QPL -M39014/01-1397	
0098A			C22	
			QPL -M39014/01-1397	
0099	00001.000	0972946-0039	RES FIX 82.0 OHMS 5 % .25 W CARBON FILM	EA
			ROH - R-25	
0099A			R73	
			ROH - R-25	
0101	00001.000	0972965-0012	CAP FIX CERAMIC .010 MF 10% 200V	EA
			QPL - CK06BX103K	
0101A			C34	
			QPL - CK06BX103K	
0102	00001.000	0539370-0264	RES FIX FILM 54.9 OHM 1% .25 WATT	EA
			COR - NA55	
0102A			R2	
			COR - NA55	
0103	00001.000	0772494-0005	TRANSISTOR SWD0027	EA
			SEE - TI DRAWING	
0103A			Q4	
			SEE - TI DRAWING	
0104	00000.000	0772494-0001	TRANSISTOR 2N5322	EA
			SEE - TI DRAWING	
0104A			ITEM 104 CAN BE USED AS AN	
			SEE - TI DRAWING	
0104B			ALTERNATE FOR ITEM 103	
			SEE - TI DRAWING	
0105	00002.000	0972988-0027	SCREW 6-32 X .312 PAN HEAD CRES	EA
0106	00006.000	0972057-0001	TRANSISTOR-A5T2222 NPN SILICON	EA
			TI- -A5T2222	
0106A			Q5,Q6,Q11,Q15,Q20,Q23	
			TI- -A5T2222	
0107	00003.000	0800523-0001	TRANSISTOR A5T2907 PNP SILICON	EA
			TI- -A5T2907	
0107A			Q10,Q22,Q24	
			TI- -A5T2907	

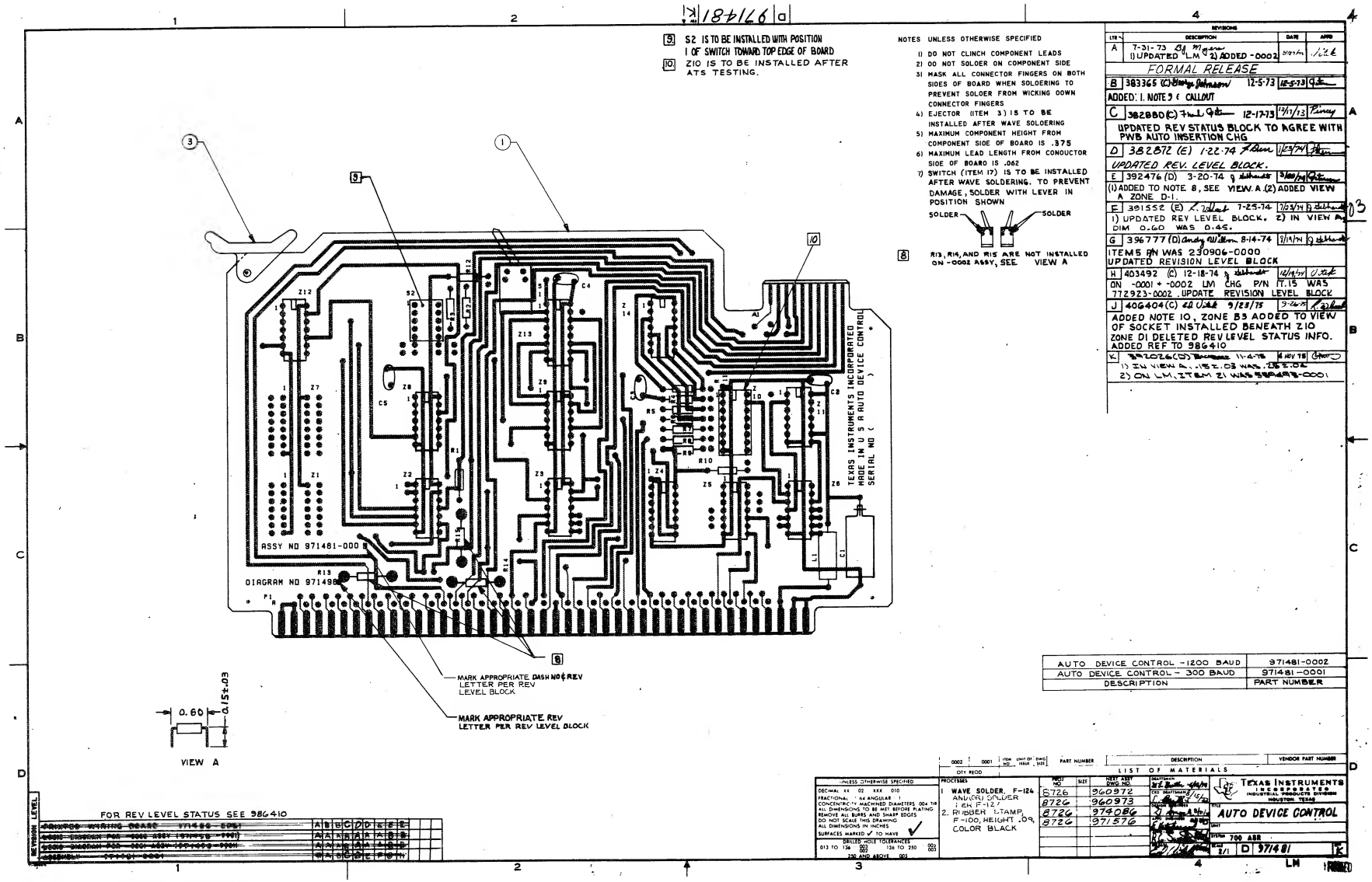

D 971481 K
9 S2 IS TO BE INSTALLED WITH POSITION 1 OF SWITCH TOWARD TOP EDGE OF BOARD
10 Z10 IS TO BE INSTALLED AFTER ATS TESTING.
NOTES UNLESS OTHERWISE SPECIFIED
1) DO NOT CLINCH COMPONENT LEADS
2) DO NOT SOLDER ON COMPONENT SIDE
3) MASK ALL CONNECTOR FINGERS ON BOTH SIDES OF BOARD WHEN SOLDERING TO PREVENT SOLDER FROM WICKING DOWN CONNECTOR FINGERS
4) EJECTOR (ITEM 3) IS TO BE INSTALLED AFTER WAVE SOLDERING
5) MAXIMUM COMPONENT HEIGHT FROM COMPONENT SIDE OF BOARD IS .375
6) MAXIMUM LEAD LENGTH FROM CONDUCTOR SIDE OF BOARD IS .062
7) SWITCH (ITEM 17) IS TO BE INSTALLED AFTER WAVE SOLDERING. TO PREVENT DAMAGE, SOLDER WITH LEVER IN POSITION SHOWN
SOLDER
SOLDER
8 R13, R14, AND R15 ARE NOT INSTALLED ON -0002 ASSY, SEE VIEW A
REVISIONS
LTR DESCRIPTION DATE APPD
A 7-31-73 1) UPDATED LM 2) ADDED -0002
FORMAL RELEASE
B 383365 (C) 12-5-73 12-5-73
ADDED: 1. NOTE 9 & CALLOUT
C 382880 (C) 12-17-73 12/17/73
UPDATED REV STATUS BLOCK TO AGREE WITH PWB AUTO INSERTION CHG
D 382872 (E) 1-22-74 1/23/74
UPDATED REV. LEVEL BLOCK.
E 392476 (D) 3-20-74 3/20/74
(1) ADDED TO NOTE 8, SEE VIEW A. (2) ADDED VIEW A ZONE D-1.
F 391552 (E) 7-25-74 7/25/74
1) UPDATED REV LEVEL BLOCK. 2) IN VIEW A DIM 0.60 WAS 0.45.
G 396777 (D) 8-14-74 8/14/74
ITEMS P/N WAS 230906-0000
UPDATED REVISION LEVEL BLOCK
H 403492 (C) 12-18-74 12/19/74
ON -0001 + -0002 LM CHG P/N T.15 WAS 772923-0002. UPDATE REVISION LEVEL BLOCK
J 406404 (C) 9/23/75 9-26-75
ADDED NOTE 10, ZONE B3 ADDED TO VIEW OF SOCKET INSTALLED BENEATH Z10
ZONE D1 DELETED REV LEVEL STATUS INFO. ADDED REF TO 986410
K 11-4-75 4 NOV 75
1) IN VIEW A, .15±.03 WAS .25±.04
2) ON LM, ITEM 21 WAS 589493-0001
ASSY NO 971481-000
DIAGRAM NO 971498
TEXAS INSTRUMENTS INCORPORATED MADE IN U S A AUTO DEVICE CONTROL SERIAL NO ( )
MARK APPROPRIATE DASH NO & REV LETTER PER REV LEVEL BLOCK
MARK APPROPRIATE REV LETTER PER REV LEVEL BLOCK
0.60
0.15±.03
VIEW A
AUTO DEVICE CONTROL -1200 BAUD 971481-0002
AUTO DEVICE CONTROL - 300 BAUD 971481-0001
DESCRIPTION PART NUMBER
LIST OF MATERIALS
PROCESSES
1 WAVE SOLDER, F-124 AND (OR) SOLDER PER F-127
2. RUBBER STAMP, F-100, HEIGHT .09, COLOR BLACK
PROJ NO. SIZE NEXT ASSY DWG NO.
8726 960972
8726 960973
8726 974086
8726 971576
UNLESS OTHERWISE SPECIFIED
DECIMAL XX .02 XXX .010
FRACTIONAL 1/64 ANGULAR 1
CONCENTRICITY MACHINED DIAMETERS .004 TIR
ALL DIMENSIONS TO BE MET BEFORE PLATING
REMOVE ALL BURRS AND SHARP EDGES
DO NOT SCALE THIS DRAWING
ALL DIMENSIONS IN INCHES
SURFACES MARKED ✓ TO HAVE
DRILLED HOLE TOLERANCES
.013 TO .136 .002 .136 TO .250 .003
.250 AND ABOVE .005
TEXAS INSTRUMENTS INCORPORATED INDUSTRIAL PRODUCTS DIVISION HOUSTON, TEXAS
AUTO DEVICE CONTROL
700 ASR
SCALE 2/1 D 971481 K
LM
REVISION LEVEL
FOR REV LEVEL STATUS SEE 986410

PART NUMBER	REV	DESCRIPTION
0971481-0001	J	AUTO DEVICE CONTROL-300 BAUD
0971481-0002	J	AUTO DEVICE CONTROL CARD 1200 BAUD

ITEM.	QUANTITY.	COMPONENT..	DESCRIPTION	UM
0001	00001.000	0971480-0001	PWB,AUTO DEVICE CONTROL	EA
0003	00001.000	0413277-0011	EJECTOR,PCB,NON-LOCKING,R.BLUE SCA - S--001R.BLUE	EA
0004	00001.000	0538433-0001	COIL RF 5.60 UH .13 OHM 885 MA LT10K158 QPL - M-90542-14	EA
0004A			L1 QPL - M-90542-14	
0005	00001.000	0972924-0011	CAP FIX TANT SOLID 68 MFD 10 % 15 VOLT QPL - M3-003/1-2274	EA
0005A			C1 QPL - M3-003/1-2274	
0006	00004.000	0532736-0002	CAP FIX CERAMIC .02 MF 20/80% 25 VOLT CRL - 2-DU60E203ZAC	EA
0006A			C2,C3,C4,C5 CRL - 2-DU6CE2G3ZAC	
0007	00002.000	0222222-7402	NETWORK SN7402N TI- - SN-402N	EA
0007A			Z4,Z14 TI- - SN-402N	
0008	00002.000	0222222-7403	NETWORK SN7403N	EA
0008A			Z3,Z12	
0009	00002.000	0222222-7404	NETWORK SN7404N	EA
0009A			Z2,Z6	
0010	00001.000	0222222-7409	NETWORK-SN7409N	EA
0010A			Z9	
0011	00001.000	0222222-7427	NETWORK SN7427N TI- - SN-427N	EA
0011A			Z8 TI- - SN-427N	
0012	00002.000	0222222-7164	NETWORK SN74164N TI- - SN-4164N	EA
0012A			Z5,Z11 TI- - SN-4164N	
0013	00001.000	0222222-7175	NETWORK SN74175N	EA
0013A			Z13	
0014	00001.000	0971521-0004	NETWORK,PRGM 256 BIT PROM,ADC PATTERN #4 1210-1576-026	EA
0014A			Z10	
0015	00001.000	0972594-0002	SWITCH,ROCKER-PWB MOUNTED	EA
0015A			S2	
0016	00001.000	0539544-0002	SOCKET,16PIN IC LOW PROFILE SOLDER TAIL TI - C9--16-02	EA
0016A			XZ10 TI - C9--16-02	
0017	00001.000	0235722-0006	SWITCH SUBMINI. TOGGLE 2 POSITION - C-CT8201	EA
0017A			S1 - C-CT8201	
0018	00012.000	0972946-0072	RES FIX 2.0K OHM 5 % .25 W CARBON FILM ROH - R-25	EA
0018A			R1 THRU R12 ROH - R-25	
0019	00003.000 for-0001 only	0972946-0017	RES FIX 10.0 OHM 5 % .25 W.CARBON FILM ROH - R-25	EA
0019A			R13,R14,R15 ROH - R-25	
0020	REF	0971498-9901	DIAG,LOGIC,DET-AUTO DEVICE CONTROL	EA
0021	00006.000	0972736-0014	SOCKET,GLD SPRING,TIN EYLT-.025 PIN DIA	EA
0022	REF	0955745-9901	TEST PROGRAM,SPD,ADC,PCB	EA

NOTES UNLESS OTHERWISE SPECIFIED

1) DO NOT CLINCH COMPONENT LEADS
2) DO NOT SOLDER ON COMPONENT SIDE
3) MASK ALL CONNECTOR FINGERS ON BOTH SIDES OF BOARD WHEN SOLDERING TO PREVENT SOLDER FROM WICKING ONTO CONNECTOR FINGERS
4) EJECTOR (ITEM 6) IS TO BE INSTALLED AFTER WAVE SOLDERING
5) MAXIMUM COMPONENT HEIGHT FROM COMPONENT SIDE OF BOARD IS .375
6) MAXIMUM LEAD LENGTH FROM CONDUCTOR SIDE OF BOARD IS .062
7 SWITCH S1 (ITEM 31) IS TO BE INSTALLED AFTER WAVE SOLDERING. TO PREVENT DAMAGE, SOLDER WITH LEVER IN POSITION SHOWN

SOLDER — SOLDER

[8] BEND LEADS AND LAY C2 FLAT ON BOARD.
[9] BEND LEADS AND LAY C5 AGAINST Z13

REVISIONS		DATE	APPROVED
C	382338 (E) 9-19-73 REVISED L/M, UPDATED REV LEVEL BLOCK	9/20/73	
	FORMAL RELEASE		
D	383369 (C) 11-14-73 ADDED SWITCH POSITIONS TO ASSY. NUMBER TABLE ZONE 1-B. ADDED * NOTE ZONE 3-A. UPDATED REV. LEVEL BLOCK.	11/19/73	
E	382879 (D) 12-13-73 REDRAWN WITH CHANGES TO ADD REF. DESIGNATORS TO PWB ETCHING PROCESS. CHG: -0001 LM IT. 4 WAS: 230571-1000, CAP .022 MF 100 V, 10%. UPDATED REV. LEVEL BLOCK.	12-18-73	
F	386982 (C) 3-20-74 ADDED NOTES 8 AND 9 AND NOTE CALLOUT TO F/D ZONE C-8.	3/20/74	
G	391557 (E) 7-24-74 UPDATED REVISION LEVEL BLOCK ZONE A-8	7-26-74	
H	396778 (D) 8-14-74 ITEM 2 P/N WAS 230906-0000 FOR -0001 ONLY UPDATED REVISION LEVEL BLOCK	8/19/74	
J	392082 (D) 4-30-75 CHG: ITEM 30 P/N WAS 772923-0009	5/2/75	
K	409817 (E) 11-3-75 ADDED 971570 & 973955 AS N/A	11-4-75	

(-0001 SHOWN)

PROCESS:
1. WAVE SOLDER, F124 AND/OR SOLDER PER F127
2. RUBBER STAMP, F100, HEIGHT .09, COLOR BLACK

ASSY NUMBER	DESCRIPTION	CUTOUT RES NUMBER(S)	OPEN (OFF)	CLOSED (ON)
971483-0007	RDC 1200 BAUD CODE 4	R1 R8 R17 R19 R20 R25	6	1-5,7
971483-0006	RDC 1200 BAUD CMPTR OPTION	R1,R2,R3,R4,R20 *	6,7	1-5
971483-0005	RDC 300 BAUD CODE 3	R17	↕	↕
971483-0004	RDC 300 BAUD CODE 2	R17		
971483-0003	RDC 1200 BAUD CODE 1	R1, R3, R20		
971483-0002	RDC 300 BAUD CODE 1	R17		
971483-0001	RDC, NO PROM	NONE	6,7	1-5
			S2 SWITCH POSITIONS	

* REMOVE R2 - REINSTALL BETWEEN E3 & E4
REMOVE R4 - REINSTALL BETWEEN E1 & E2

QTY REQD	ITEM NO	CODE IDENT	PART OR IDENTIFYING NUMBER	NOMENCLATURE OR DESCRIPTION	PROCUREMENT SPECIFICATION

PARTS LIST

NEXT ASSY	USED ON
971570	8726
973955	8726
974085	8726
960972	8726

APPLICATION

UNLESS OTHERWISE SPECIFIED
- DIMENSIONS ARE IN INCHES
- TOLERANCES ANGLES ±1
3 PLACE DECIMALS ±.010
2 PLACE DECIMALS ±.02

MATERIAL

DWN 9-5-73
CHK 9/20/73
ENGR E.N. Cons 20 Sept 73
QA
APVD 9/20/73
CONTR NO 9/21/73
DESIGN ACTIVITY RELEASE 9/21/73

TEXAS INSTRUMENTS INCORPORATED Equipment Group Dallas, Texas

REMOTE DEVICE CONTROL

SIZE D | CODE IDENT NO 96214 | DRAWING NO 971483

SCALE 2/1 | REV K | SHEET

LM

FOR REV STATUS SEE DWG 986410

~~PRINTED WIRING BOARD FOR -0001 ASSY (971482)~~	A	B	C	D	E	F	
~~LOGIC DIAGRAM -0001 THRU -0007 ASSY (971489)~~	A	A	B	C	E	D	
~~ASSEMBLY 971483~~	B	D	E	F	G	H	

D 971483

FEBRUARY 27, 1976 LIST OF MATERIAL

PART NUMBER REV DESCRIPTION.....
971483-0001 K ROC NO PROM

ITEM.	QUANTITY.	COMPONENT..	DESCRIPTION.....	UM
0001	00001.000	971482-0001	PWB (ROC)	EA
			1209-1482-000	
0001A			C1	
			QPL-M39003/1-2274	
0002	00001.000	972924-0011	CAP FIX TANT SOLID 68 MFD 10 % 15 VOLT	EA
			QPL-M39003/1-2274	
0002A			C1	
			QPL-M39003/1-2277	
0003	00001.000	538433-0001	COIL RF 5.60 UH .13 OHM 885 MA LT10K158	EA
			QPL- MS90542-14	
0003A			L1	
			QPL- MS90542-14	
0004	00015.000	532736-0002	CAP FIX CERAMIC .02 MF 20/80% 25 VOLT	EA
			CRL- 2DDU60E203ZAC	
0004A			C2 THRU C16	
			CRL- 2DDU60E203ZAC	
0006	00001.000	413277-0011	EJECTOR,PCB,NON-LOCKING,R.BLUE	EA
			SCA-S-200(R.BLUE	
0007	00003.000	222222-7400	NETWORK SN7400N	EA
			- 3-000	
0007A			Z2,Z22,Z23	
			- 3-000	
0008	00004.000	222222-7402	NETWORK SN7402N	EA
			TI--SN7402N	
0008A			Z1,Z21,Z30,Z38	
			TI--SN7402N	
0009	00005.000	222222-7403	NETWORK SN7403N	EA
0009A			Z10,Z20,Z29,Z37,Z40	
0010	00003.000	222222-7404	NETWORK SN7404N	EA
0010A			Z16,Z27,Z39	
0011	00002.000	222222-7408	NETWORK-SN7408N	EA
0011A			Z28,Z31	
0012	00001.000	222222-7409	NETWORK-SN7409N	EA
0012A			Z6	
0013	00002.000	222222-7425	NETWORK SN7425N	EA
0013A			Z4,Z25	
0014	00001.000	222222-7427	NETWORK SN7427N	EA
			TI--SN7427N	
0014A			Z5	
			TI--SN7427N	
0015	00001.000	222222-7432	NETWORK SN7432N	EA
			-SN7432N	
0015A			Z3	
			-SN7432N	
0016	00001.000	222222-7451	NETWORK SN7451N	EA
			-SN7451N	
0016A			Z7	
			-SN7451N	
0017	00004.000	222222-7474	NETWORK SN7474N	EA
			- 3-000	
0017A			Z11,Z24,Z33,Z35	
			- 3-000	
0018	00001.000	222222-7121	NETWORK SN74121N	EA
0018A			Z12	
0019	00001.000	222222-7154	NETWORK SN74154N	EA
			-SN74154N	
0019A			Z15	
			-SN74154N	
0020	00001.000	222222-7155	NETWORK SN74155N	EA
0020A			Z36	
0021	00002.000	222222-7164	NETWORK SN74164N	EA
			TI--SN74164N	
0021A			Z13,Z32	
			TI--SN74164N	
0022	00002.000	222222-7165	NETWORK SN74165N	EA

PART NUMBER REV DESCRIPTION.....
971483-0001 K RDC NO PRCM

ITEM.	QUANTITY.	COMPONENT..	DESCRIPTION.....	UM
0022A			Z8,Z9	
0023	00003.000	222222-7174	NETWORK SN74174N	EA
0023A			Z17,Z18,Z19	
0025	00002.000	800118-0010	RESISTOR 2.0KOHMS DIL PULL UP 16 PINS BEC-8981R2.0K	EA
0025A			Z26,Z34 BEC-8981R2.0K	
0026	00001.000	972946-0100	RES FIX 30 K OHM 5 % .25 W CARBON FILM ROH- R-25	EA
0026A			R15 ROH- R-25	
0027	00017.000	972946-0017	RES FIX 10.0 OHM 5 % .25 W.CARBON FILM ROH- R-25	EA
0027A			R1,R2,R3,R4,R5,R6,R8,R10,R14 ROH- R-25	
0027B			R16,R17,R18,R19,R22,R24,R25 ROH- R-25	
0027C			R20 ROH- R-25	
0028	00003.000	972946-0089	RES FIX 10 K OHM 5 % .25 W CARBON FILM ROH- R-25	EA
0028A			R7,R13,R21 ROH- R-25	
0029	00001.000	972924-0015	CAP FIX TANT SOLID 47 MFD 10 % 20 VOLT QPL-M39003/1-2295	EA
0029A			C17 QPL-M39003/1-2295	
0030	00001.000	972594-0004	SWITCH,ROCKER-PWB MOUNTED	EA
0030A			S2	
0031	00001.000	235722-0006	SWITCH SUBMINI. TOGGLE 2 POSITION - C-CT8201	EA
0031A			S1 - C-CT8201	
0032	00001.000	539544-0002	SOCKET,16PIN IC LOW PROFILE SOLDER TAIL TI -C93-16-02	EA
0032A			XZ14 TI -C93-16-02	
0033	REF	971499-9901	DIAGRAM,LOGIC-DETAILED RDC	EA
0034	REF	955742-9901	TEST PROGRAM,SPD,RDC PCB	EA
0035	00001.000	972946-0072	RES FIX 2.0K OHM 5 % .25 W CARBON FILM ROH- R-25	EA
0035A			R26 ROH- R-25	

NOTES: UNLESS OTHERWISE SPECIFIED

1) DO NOT CLINCH COMPONENT LEADS.
2) DO NOT SOLDER ON COMPONENT SIDE.
3) MASK ALL CONNECTOR FINGERS ON BOTH SIDES OF BOARD WHEN SOLDERING TO PREVENT SOLDER FROM WICKING DOWN CONNECTOR FINGERS
4) EJECTOR (ITEM 2) IS TO BE INSTALLED AFTER WAVE SOLDERING
5) MAXIMUM COMPONENT HEIGHT FROM COMPONENT SIDE OF BOARD IS .375
6) MAXIMUM LEAD LENGTH FROM CONDUCTOR SIDE OF BOARD IS .062.

REVISIONS

ZONE	LTR	DESCRIPTION	DATE	APPROVED
	B	382313 (D) [signature] 10-17-73	10/19/73	[signature]
		LM CHG: 1) IT.7 QTY WAS 1, 2) ADDED TO IT.7A Z8, 3) QTY IT.14 WAS 1 4) ADDED TO IT.14A Z16, 5) QTY IT.23 WAS 15, 6) CHG DESCRIPTION IT.30 WAS ASG		
		FORMAL RELEASE		
	C	391533 E 7-25-74 [signature]	7-26-74	[signature]
		UPDATED REVISION LEVEL BLOCK.		
	D	396779 (D) [signature] 8-14-74	8-22-74	[signature]
		ITEM 22 P/N WAS 230906-0000 UPDATED REVISION LEVEL BLOCK		

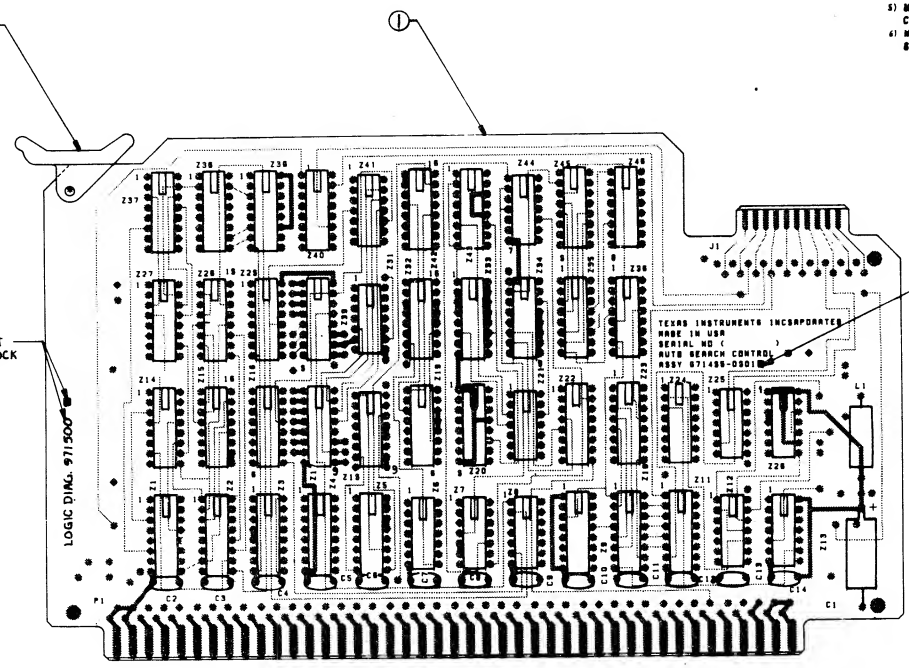

PROCESS:
1. WAVE SOLDER, F124 AND/OR SOLDER PER F127
2. RUBBER STAMP, F100, HEIGHT .09, COLOR BLACK

QTY REQD -2	QTY REQD -1	ITEM NO	CODE IDENT	PART OR IDENTIFYING NUMBER	NOMENCLATURE OR DESCRIPTION	PROCUREMENT SPECIFICATION

PARTS LIST

UNLESS OTHERWISE SPECIFIED
- REMOVE ALL BURRS AND SHARP EDGES
- CONCENTRICITY MACHINED DIAMETERS .010 FIR
- DIMENSIONAL LIMITS APPLY BEFORE FINISH PROCESSING
- IDENTIFYING NUMBERS SHOWN IN PARENTHESES FOR REFERENCE ONLY
- INTERPRET DRAWING IN ACCORDANCE WITH MIL-STD-100

HOLE TOLERANCE

.013 THRU .004 / .126 .001	.126 THRU .005 / .250 .001	.251 THRU .006 / .500 .001
.501 THRU .008 / .750 .001	.751 THRU .010 / 1.000 .001	1.001 THRU .012 / 2.000 .001

APPLICATION

UNLESS OTHERWISE SPECIFIED
- DIMENSIONS ARE IN INCHES
- TOLERANCES
ANGLES ±1°
3 PLACE DECIMALS ±.010
2 PLACE DECIMALS ±.02

MATERIAL:

DWN [signature] DATE 10-4-73
CHK [signature] 10-19-73
ENGR [signature] 10-4-73
QA
APVD [signature] 10-4-73
APVD [signature] 10-31-73
APVD [signature] 10/31/73

TEXAS INSTRUMENTS INCORPORATED
Equipment Group Dallas, Texas

AUTOMATIC SEARCH CONTROL

SIZE D | CODE IDENT NO 96214 | DRAWING NO 971485

SCALE 2/1 | REV D | SHEET

REVISION LEVEL

PRINTED WIRING BOARD FOR -0001 ASSY (971484-0001)	A	A	B	F	F
LOGIC DIAGRAM FOR -0001 ASSY (971500-9901)	*	A	A	A	B
ASSEMBLY 971485	A	B	B	C	D

LM FILMED

D 971485

PART NUMBER	REV	DESCRIPTION
971485-0001	D	AUTOMATIC SEARCH CONTROL

ITEM.	QUANTITY.	COMPONENT..	DESCRIPTION	UM
0001	00001.000	971484-0001	PWB,ASC	EA
0002	00001.000	231802-0007	EJECTOR VIO 8-200 SCA-8-200	EA
0003	00001.000	222222-7400	NETWORK SN7400N - 3-000	EA
0003A			Z26 - 3-000	
0004	00003.000	222222-7402	NETWORK SN7402N TI--SN7402N	EA
0004A			Z7,Z18,Z31 TI--SN7402N	
0005	00001.000	222222-7404	NETWORK SN7404N	EA
0005A			Z6	
0006	00001.000	222222-7405	NETWORK SN7405N	EA
0006A			Z25	
0007	00002.000	222222-7408	NETWORK-SN7408N	EA
0007A			Z13,Z8	
0008	00001.000	222222-7410	NETWORK SN7410N - 3-000	EA
0008A			Z21 - 3-000	
0009	00002.000	222222-7432	NETWORK SN7432N -SN7432N	EA
0009A			Z12,Z44 -SN7432N	
0010	00002.000	222222-7442	NETWORK-SN7442N	EA
0010A			Z17,Z30	
0011	00002.000	222222-7485	NETWORK,SN7485N	EA
0011A			Z15,Z28	
0012	00004.000	222222-7489	NETWORK SN7489N	EA
0012A			Z1,Z14,Z27,Z37	
0013	00001.000	222222-7109	NETWORK SN74109N	EA
0013A			Z5	
0014	00002.000	222222-7175	NETWORK SN74175N	EA
0014A			Z29,Z16	
0015	00006.000	222222-7151	NETWORK SN74151N	EA
0015A			Z19,Z20,Z32,Z33,Z42,Z43	
0016	00003.000	222222-7153	NETWORK SN74153N -SN74153N	EA
0016A			Z9,Z34,Z45 -SN74153N	
0017	00001.000	222222-7164	NETWORK SN74164N TI--SN74164N	EA
0017A			Z41 TI--SN74164N	
0018	00001.000	222222-7174	NETWORK SN74174N	EA
0018A			Z22	
0020	00004.000	222222-7193	NETWORK SN74193N -SN74193N	EA
0020A			Z3,Z4,Z38,Z39 -SN74193N	
0021	00001.000	418C93-0010	COIL 5.60 UH .13 OHMS 10% MIL-MS90542-14	EA
0021A			L1 MIL-MS90542-14	
0022	00001.000	230855-0001	CAP 68.000 MF 15V 10% CASE SIZE C MIL-CS13BD686K	EA
0022A			C1 MIL-CS13BD686K	

PART NUMBER	REV	DESCRIPTION
971485-0001	0	AUTOMATIC SEARCH CONTROL

ITEM.	QUANTITY.	COMPONENT..	DESCRIPTION.	UM
0023	00013.000	230561-0000	CAP .02CCC MF 25V 80/-20 %	EA
			ERI-5R35Y5U203Z	
0023A			C2 THRU C14	
			ERI-5R35Y5U203Z	
0024	00004.000	800118-0010	RESISTOR 2.0KOHMS DIL PULL UP 16 PINS	EA
			BEC-8R81R2.0K	
0024A			Z2,Z10,Z35,Z40	
			BEC-8R81R2.0K	
0025	00001.000	971521-0005	NETWORK,PROGRAMMED 256 BIT PROM,ASC CRA	EA
			1210-1577-011	
0025A			Z46	
			1210-1577-011	
0026	00001.000	971521-0006	NETWORK,PROGRAMMED 256 BIT PROM,ASC CRB	EA
			1210-1578-011	
0026A			Z36	
			1210-1578-011	
0027	00001.000	971521-0007	NETWORK,PROGRAMMED 256 BIT PROM,ASC CRC	EA
			1210-1579-010	
0027A			Z24	
			1210-1579-010	
0028	00001.000	971521-0008	NETWORK,PROGRAMMED 256 BIT PROM,ASC CRD	EA
			1210-1580-010	
0028A			Z23	
			1210-1580-010	
0029	00001.000	971521-0009	NETWORK,PROGRAMMED 256 BIT PROM,ASC CRE	EA
			1210-1581-000	
0029A			Z11	
			1210-1581-000	
0030	REF	971500-9901	DIAGRAM,LOGIC-DETAILED ASC	EA

NOTES: UNLESS OTHERWISE SPECIFIED

1) DO NOT CLINCH COMPONENT LEADS.
2) DO NOT SOLDER ON COMPONENT SIDE.
3) MARK ALL CONNECTOR FINGERS ON BOTH SIDES OF BOARD WHEN SOLDERING TO PREVENT SOLDER FROM WICKING DOWN CONNECTOR FINGERS.
4) EJECTOR (ITEM 2) IS TO BE INSTALLED AFTER WAVE SOLDERING
5) MAXIMUM COMPONENT HEIGHT FROM COMPONENT SIDE OF BOARD IS .37
6) MAXIMUM LEAD LENGTH FROM CONDUCTOR SIDE OF BOARD IS .062.

REVISIONS

ZONE	LTR	DESCRIPTION	DATE	APPROVED
	A	7-27-73 D. Smith ADDED REF DESIG TO LM	8/27/73	[illegible]
	B	8/27/73 [illegible] UPDATE L/M	8/27/73	[illegible]
	C	8/27/73 [illegible] UPDATED L/M	8/27/73	[illegible]
		FORMAL RELEASE		
	D	396780 D [illegible] 8-14-74 CHG: LM IT. 22 WAS: 230906-0000, CAP 150 MF, CASE SIZE D UPDATED REV. LEVEL BLOCK	8/19/74	[illegible]
	E	395660 (D) [illegible] 5/1/75 (1) PROCESS 2 WAS ... COLOR BLACK (2) UPDATED REV LEVEL BLOCK	5/2/75	[illegible]

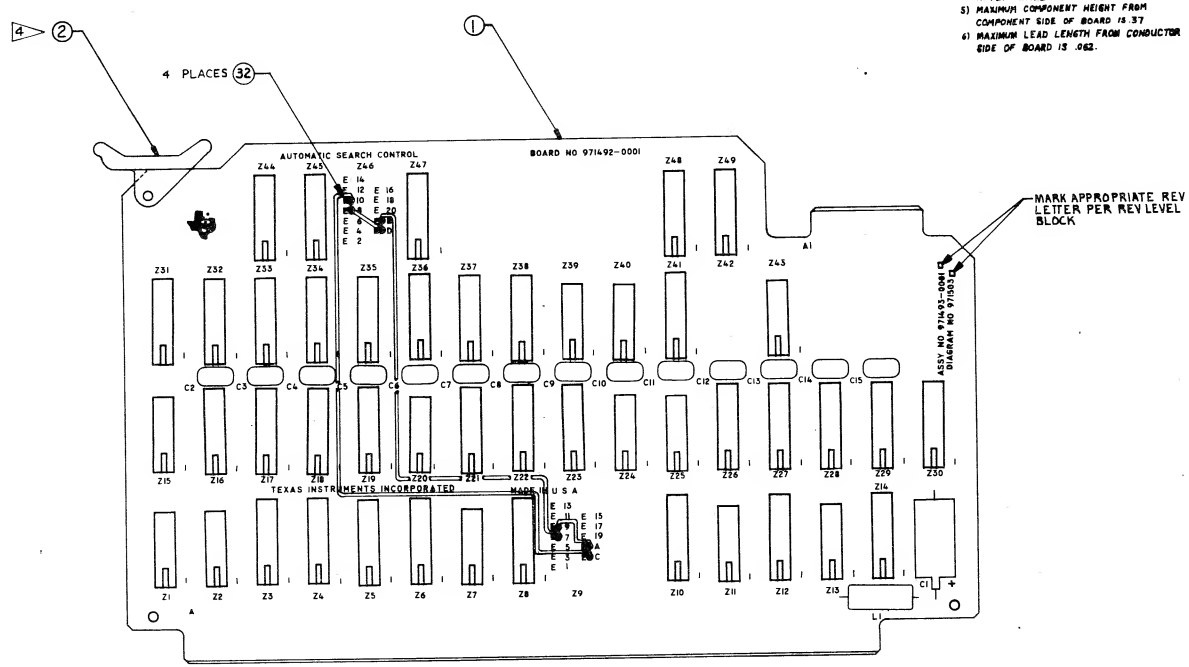

PROCESS:
1. WAVE SOLDER, F124 AND/OR SOLDER PER F127
2. RUBBER STAMP, F100, HEIGHT .09, COLOR CONTRASTING. BLACK OR WHITE

REVISION LEVEL						
PRINTED WIRING BOARD FOR -0001 (971492-0001)	A	B	B	B	B	C
LOGIC DIAGRAM FOR ASSEMBLY (971503-9901)	*	*	*	*	A	A
ASSEMBLY (971493-0001)	*	A	B	C	D	E

-2 QTY REQD	-1	ITEM NO	CODE IDENT	PART OR IDENTIFYING NUMBER	NOMENCLATURE OR DESCRIPTION	PROCUREMENT SPECIFICATION

PARTS LIST

UNLESS OTHERWISE SPECIFIED
- REMOVE ALL BURRS AND SHARP EDGES
- CONCENTRICITY MACHINED DIAMETERS .010 FIR
- DIMENSIONAL LIMITS APPLY BEFORE FINISH PROCESSING
- IDENTIFYING NUMBERS SHOWN IN PARENTHESES FOR REFERENCE ONLY
- INTERPRET DRAWING IN ACCORDANCE WITH MIL-STD-100

HOLE TOLERANCE

.013 THRU .125 +.004 -.001	.126 THRU .250 +.005 -.001	.251 THRU .500 +.006 -.001
.501 THRU .750 +.008 -.001	.751 THRU 1.000 +.010 -.001	1.001 THRU 2.000 +.012 -.001

NEXT ASSY	USED ON
960972	8726

APPLICATION

UNLESS OTHERWISE SPECIFIED
- DIMENSIONS ARE IN INCHES
- TOLERANCES ANGLES ±1° 3 PLACE DECIMALS ±.010 2 PLACE DECIMALS ±.02

MATERIAL:

DWN [illegible] DATE 7-25-73
CHK [illegible] 7/31/73
ENGR [illegible] 31 July 73
QA
APVD [illegible] 8/16/73
CONTR NO [illegible] 8/27/73
DESIGN ACTIVITY RELEASE [illegible] 8/27/73

TEXAS INSTRUMENTS INCORPORATED Equipment Group Dallas, Texas

AUTOMATIC SEARCH CONTROL
MULTIWIRE

SIZE	CODE IDENT NO	DRAWING NO
D	96214	971493

SCALE 2/1 REV E SHEET

LM

TI-7914 E F4

D 971493

PART NUMBER	REV	DESCRIPTION
971493-0001	E	AUTOMATIC SEARCH CONTROL

ITEM.	QUANTITY.	COMPONENT..	DESCRIPTION.	UM
0001	00001.000	971492-0001	PWB,ASC	EA
0002	00001.000	231802-0007	EJECTOR VIO 8-200 SCA-8-200	EA
0003	00001.000	222222-7400	NETWORK SN7400N - 3-000	EA
0003A			Z7 - 3-000	
0004	00003.000	222222-7402	NETWORK SN7402N TI--SN7402N	EA
0004A			Z1,Z2,Z24 TI--SN7402N	
0005	00001.000	222222-7404	NETWORK SN7404N	EA
0005A			Z40	
0006	00001.000	222222-7405	NETWORK SN7405N	EA
0006A			Z11	
0007	00002.000	222222-7408	NETWORK-SN7408N	EA
0007A			Z13,Z20	
0008	00001.000	222222-7410	NETWORK SN7410N - 3-000	EA
0008A			Z43 - 3-000	
0009	00002.000	222222-7432	NETWORK SN7432N -SN7432N	EA
0009A			Z25,Z39 -SN7432N	
0010	00002.000	222222-7442	NETWORK-SN7442N	EA
0010A			Z16,Z32	
0011	00002.000	222222-7485	NETWORK,SN7485N	EA
0011A			Z5,Z35	
0012	00004.000	222222-7489	NETWORK SN7489N	EA
0012A			Z4,Z18,Z34,Z45	
0013	00001.000	222222-7109	NETWORK SN74109N	EA
0013A			Z8	
0014	00002.000	222222-7175	NETWORK SN74175N	EA
0014A			Z17,Z33	
0015	00006.000	222222-7151	NETWORK SN74151N	EA
0015A			Z21,Z22,Z23,Z37,Z38,Z47	
0016	00003.000	222222-7153	NETWORK SN74153N -SN74153N	EA
0016A			Z27,Z48,Z49 -SN74153N	
0017	00001.000	222222-7164	NETWORK SN74164N TI--SN74164N	EA
0017A			Z15 TI--SN74164N	
0018	00001.000	222222-7174	NETWORK SN74174N	EA
0019A			Z28	
0020	00004.000	222222-7193	NETWORK SN74193N -SN74193N	EA
0020A			Z3,Z19,Z31,Z44 -SN74193N	
0021	00001.000	538433-0001	COIL RF 5.60 UH ±13 OHM 885 MA LT10K158 QPL- MS90542-14	EA
0021A			L1 QPL- MS90542-14	
0022	00001.000	972924-0011	CAP FIX TANT SOLID 68 MFD 10 % 15 VOLT QPL-M39003/1-2274	EA
0022A			C1 QPL-M39003/1-2274	

PART NUMBER	REV	DESCRIPTION
971493-0001	E	AUTOMATIC SEARCH CONTROL

ITEM.	QUANTITY.	COMPONENT..	DESCRIPTION	UM
0023	00014.000	532736-0002	CAP FIX CERAMIC .02 MF 20/80% 25 VOLT	EA
			CRL- 2D0U60F203ZAC	
0023A			C2 THRU C15	
			CRL- 2D0U60E203ZAC	
0024	00004.000	800118-0010	RESISTOR 2.0KOHMS DIL PULL UP 16 PINS	EA
			BEC-8981R2.0K	
0024A			Z6,Z10,Z36,Z41	
			BEC-8981R2.0K	
0025	00001.000	971521-0005	NETWORK,PROGRAMMED 256 BIT PROM,ASC CRA	EA
			1210-1577-011	
0025A			Z30	
			1210-1577-011	
0026	00001.000	971521-0006	NETWORK,PROGRAMMED 256 BIT PROM,ASC CRB	EA
			1210-1578-011	
0026A			Z29	
			1210-1578-011	
0027	00001.000	971521-0007	NETWORK;PROGRAMMED 256 BIT PROM,ASC CRC	EA
			1210-1579-010	
0027A			Z26	
			1210-1579-010	
0028	00001.000	971521-0008	NETWORK,PROGRAMMED 256 BIT PROM,ASC CRD	EA
			1210-1580-010	
0028A			Z12	
			1210-1580-010	
0029	00001.000	971521-0009	NETWORK,PROGRAMMED 256 BIT PROM,ASC CRE	EA
			1210-1581-000	
0029A			Z14	
			1210-1581-000	
0030	REF	971503-9901	DIAGRAM,LOGIC-DETAILED ASC	EA
0031	REF	955744-9901	TEST PROGRAM,SPD,ASC,PCB	EA
0032	AR	417836-0005	WIRE HOOKUP 8-24 AWG SOLID WHITE	FT
			JUD- HH0110	

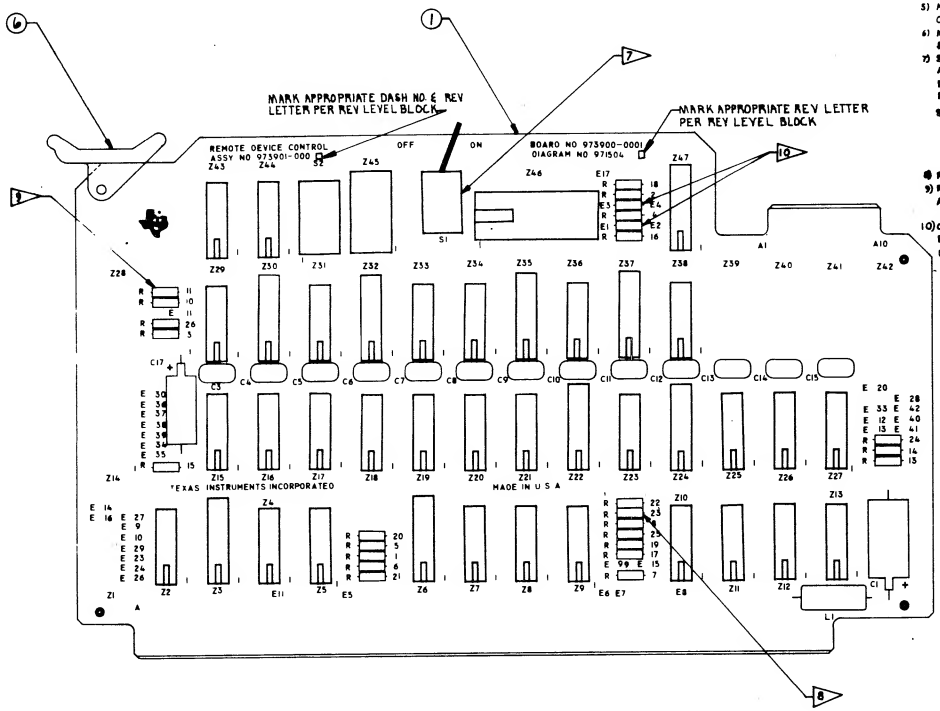

NOTES: UNLESS OTHERWISE SPECIFIED

1) DO NOT CLINCH COMPONENT LEADS.
2) DO NOT SOLDER ON COMPONENT SIDE.
3) MASK ALL CONNECTOR FINGERS ON BOTH SIDES OF BOARD WHEN SOLDERING TO PREVENT SOLDER FROM WICKING DOWN CONNECTOR FINGERS.
4) EJECTOR (ITEM 6) IS TO BE INSTALLED AFTER WAVE SOLDERING
5) MAXIMUM COMPONENT HEIGHT FROM COMPONENT SIDE OF BOARD IS .37
6) MAXIMUM LEAD LENGTH FROM CONDUCTOR SIDE OF BOARD IS .062.
7) SWITCH (ITEM 31) TO BE INSTALLED AFTER WAVE SOLDERING. TO PREVENT DAMAGE, SOLDER WITH LEVER IN POSITION SHOWN

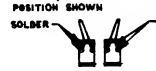

8) R23 IS NOT INSTALLED
9) R11 NOT USED ON -0001 THRU -0007 ASSEMBLIES
10) ON -0006 ASSY ONLY, INSTALL R8 BETWEEN E3 & E4 AND R4 BETWEEN E1 & E2. ON -0001 THRU -0006 & -0007, R2 & R4 ARE INSTALLED AS SHOWN WITH NO RESISTORS BETWEEN E1 & E2 OR E3 & E4.

REVISIONS

ZONE	LTR	DESCRIPTION	DATE	APPROVED
	A	ECN [illegible] 7-27-73 ADDED REF DES'S 16 & -0002 THRU -0007 TO LM		
	B	ECN 383758 7/6/73 CHANGES MADE TO LM - ONLY THRU -0007	7/6/73	
		FORMAL RELEASE		
	C	383370(C) 11-14-73	11-14-73	
		UPDATED REV LEVEL BLOCK. ADDED REF. & SWITCH POSITIONS TO PART NUMBER TRACE.		
	D	396753 (D) 8-15-74 1) UPDATED REV LEVEL BLOCK. 2) ON LM, CHANGED ITEM 2, WAS P/N 523904-0000, QTY 1.	8/19/74	
	E	399643 (D) 12-11-74 1. PROCESS 2 WAS: RUBBER STAMP... COLOR BLACK. UPDATED REVISION LEVEL BLOCK	12/11/74	
	F	403492 (C) 12-18-74 1. ON -0001 THRU -0007 LM CHG P/N 17.24 WAS 772923-0004. UPDATE REVISION LEVEL BLOCK	12/19/74	
	G	409817 (E) 11-3-75 ADDED 971570, 973955, & 974085 AS N/A	11-4-75	
	H	409819 (E) 1-31-76 1) DELETED ON -2 THRU -7 ITEMS 4 THRU 35 WERE SAME AS -1 EXCEPT; ITEM 24 QTY WAS 4 P/N 971521-1, ITEM 27, R1 WAS NOT ON -2, R1, R2, WAS NOT ON -3, R9, R17 WERE NOT ON -4, R17 WAS NOT ON -5, R1, R2, R3, WERE NOT -6, R1, R8, R17, R19, R20, R25 WERE NOT ON -7 2) CHANGED ON -2 THRU -7 ITEM 1 WAS 973900-1, ITEM 3 QTY 1 WAS 538433-1 3) CHANGED ON-2 THRU -7, ITEM 2 WAS 972929	2/6/76	

PART NUMBER	DESCRIPTION	CUT OUT RES NUMBER		
973901-0007	RDC, 1200 BAUD CODE 4	R1, R8, R17, R19, R20, R25	6	1-5, 7
973901-0006	RDC, 1200 BAUD COMPUTER OPTION	R1, R3, R20	6, 7	1-5
973901-0005	RDC, 300 BAUD CODE 3	R17		
973901-0004	RDC, 300 BAUD CODE 2	R17		
973901-0003	RDC, 1200 BAUD CODE 1	R1, R3, R20		
973901-0002	RDC, 300 BAUD CODE 1	R17		
973901-0001	RDC, NO PROM	NONE	6 & 7	1-5

* SEE NOTE 10

PROCESS:
1. WAVE SOLDER, F124 AND/OR SOLDER PER F127.
2. RUBBER STAMP F-100, HEIGHT .09, COLOR, CONTRASTING BLACK OR WHITE.

QTY REQD	ITEM NO	CODE IDENT	PART OR IDENTIFYING NUMBER	NOMENCLATURE OR DESCRIPTION	PROCUREMENT SPECIFICATION

PARTS LIST

FOR KEY STATION SEE DWG [illegible]

PRINTED WIRING BOARD ASSY (973900)
LOGIC DIAGRAM FOR ASSEMBLY (971504-0001)
ASSEMBLY (973901)

UNLESS OTHERWISE SPECIFIED
- REMOVE ALL BURRS AND SHARP EDGES
- CONCENTRICITY MACHINED DIAMETERS .010 FIR
- DIMENSIONAL LIMITS APPLY BEFORE FINISH PROCESSING
- IDENTIFYING NUMBERS SHOWN IN PARENTHESES FOR REFERENCE ONLY
- INTERPRET DRAWING IN ACCORDANCE WITH MIL-STD-100

HOLE TOLERANCE

.013 THRU .128	.004 .001	.126 THRU .250	.003 .001	.251 THRU .500	.006 .001
.501 THRU .750	.008 .001	.751 THRU 1.000	.010 .001	1.001 THRU 2.000	.012 .001

UNLESS OTHERWISE SPECIFIED
- DIMENSIONS ARE IN INCHES
- TOLERANCES ANGLES ±1 3 PLACE DECIMALS ± .010 2 PLACE DECIMALS ± .02

MATERIAL:

971572	8726
971485	8726
974085	8726
960972	8726
NEXT ASSY	USED ON
APPLICATION	

DWN [illegible] DATE 7-26-73
CHK D. Reith 8/1/73
ENGR D. Green 8.17.73
QA
APVD [illegible] 8-27-73
CONTR DOC
PROJ [illegible] 9/7/73
DESIGN ACTIVITY RELEASE [illegible] 9.7.73

TEXAS INSTRUMENTS INCORPORATED Equipment Group Dallas, Texas

REMOTE DEVICE CONTROL

SIZE	CODE IDENT NO	DRAWING NO
D	96214	973901

SCALE 2/1 REV H SHEET

LM

TI-79145E P6

973901 D

PART NUMBER REV DESCRIPTION.....
973901-0001 J ROC NO PROM

ITEM.	QUANTITY.	COMPONENT..	DESCRIPTION.....	UM
0001	00001.000	973900-0001	PWB (ROC)	EA
0002	00001.000	972924-0011	CAP FIX TANT SOLID 68 MFD 10 % 15 VOLT QPL-M39003/1-2274	EA
0002A			C1 QPL-M39003/1-2274	
0003	1.000	538433-0001	COIL, 5.600H, 0.13 OHM, 885 MA L1	EA
0004	00013.000	532736-0002	CAP FIX CERAMIC .02 MF 20/80% 25 VOLT CRL- 2DDU60E203ZAC	EA
0004A			C3 THRU C15 CRL- 2DDU60E203ZAC	
0006	00001.000	413277-0011	EJECTOR,PCB,NON-LOCKING,R.BLUE SCA-S-200(R.BLUE	EA
0007	00003.000	222222-7400	NETWORK SN7400N - 3-000	EA
0007A			Z5 Z17 Z47 - 3-000	
0008	00004.000	222222-7402	NETWORK SN7402N TI--SN7402N	EA
0008A			Z12 Z25 Z36 Z43 TI--SN7402N	
0009	00005.000	222222-7403	NETWORK SN7403N	EA
0009A			Z2 Z7 Z13 Z27 Z44	
0010	00003.000	222222-7404	NETWORK SN7404N	EA
0010A			Z8 Z34 Z38	
0011	00002.000	222222-7408	NETWORK-SN7408N	EA
0011A			Z10 Z33	
0012	00001.000	222222-7409	NETWORK-SN7409N	EA
0012A			Z9	
0013	00002.000	222222-7425	NETWORK SN7425N	EA
0013A			Z19 Z20	
0014	00001.000	222222-7427	NETWORK SN7427N TI--SN7427N	EA
0014A			Z21 TI--SN7427N	
0015	00001.000	222222-7432	NETWORK SN7432N -SN7432N	EA
0015A			Z29 -SN7432N	
0016	00001.000	222222-7451	NETWORK SN7451N -SN7451N	EA
0016A			Z23 -SN7451N	
0017	00004.000	222222-7474	NETWORK SN7474N - 3-000	EA
0017A			Z4 Z11 Z18 Z26 - 3-000	
0018	00001.000	222222-7121	NETWORK SN74121N	EA
0018A			Z15	
0019	00001.000	222222-7154	NETWORK SN74154N -SN74154N	EA
0019A			Z46 -SN74154N	
0020	00001.000	222222-7155	NETWORK SN74155N	EA
0020A			Z30	
0021	00002.000	222222-7164	NETWORK SN74164N TI--SN74164N	EA
0021A			Z16 Z31 TI--SN74164N	
0022	00002.000	222222-7165	NETWORK SN74165N	EA
0022A			Z3 Z6	
0023	00003.000	222222-7174	NETWORK SN74174N	EA

PART NUMBER REV DESCRIPTION.....
973901-0001 J RDC NO PROM

ITEM.	QUANTITY.	COMPONENT..	DESCRIPTION.....	UM
0023A			Z22 Z24 Z35	
0025	00002.000	800118-0010	RESISTOR 2.0KOHMS DIL PULL UP 16 PINS BEC-8981R2.0K	EA
0025A			Z32 Z37 BEC-8981R2.0K	
0026	00001.000	972946-0100	RES FIX 30 K OHM 5 % .25 W CARBON FILM ROH- R-25	EA
0026A			R15 ROH- R-25	
0027	00017.000	972946-0017	RES FIX 10.0 OHM 5 % .25 W.CARBON FILM ROH- R-25	EA
0027A			R1 R2 R3 R4 R5 R6 R8 R10 R22 ROH- R-25	
0027B			R16 R17 R14 R19 R24 R20 R18 ROH- R-25	
0027C			R25 ROH- R-25	
0028	00003.000	972946-0089	RES FIX 10 K OHM 5 % .25 W CARBON FILM ROH- R-25	EA
0028A			R7 R13 R21 ROH- R-25	
0029	00001.000	972924-0015	CAP FIX TANT SOLID 47 MFD 10 % 20 VOLT QPL-M39003/1-2295	EA
0029A			C17 QPL-M39003/1-2295	
0030	00001.000	972594-0004	SWITCH,ROCKER-PWB MOUNTED	EA
0030A			S2	
0031	00001.000	235722-0006	SWITCH SUBMINI. TOGGLE 2 POSITION - C-CT8201	EA
0031A			S1 - C-CT8201	
0032	00001.000	539544-0002	SOCKET,16PIN IC LOW PROFILE SOLDER TAIL TI -C93-16-02	EA
0032A			XZ45 TI -C93-16-02	
0033	REF	971504-9901	DIAGRAM,LOGIC-DETAILED RDC	EA
0034	REF	955742-9901	TEST PROGRAM,SPD,RDC PCB	EA
0035	00001.000	972946-0072	RES FIX 2.0K OHM 5 % .25 W CARBON FILM ROH- R-25	EA
0035A			R26 ROH- R-25	

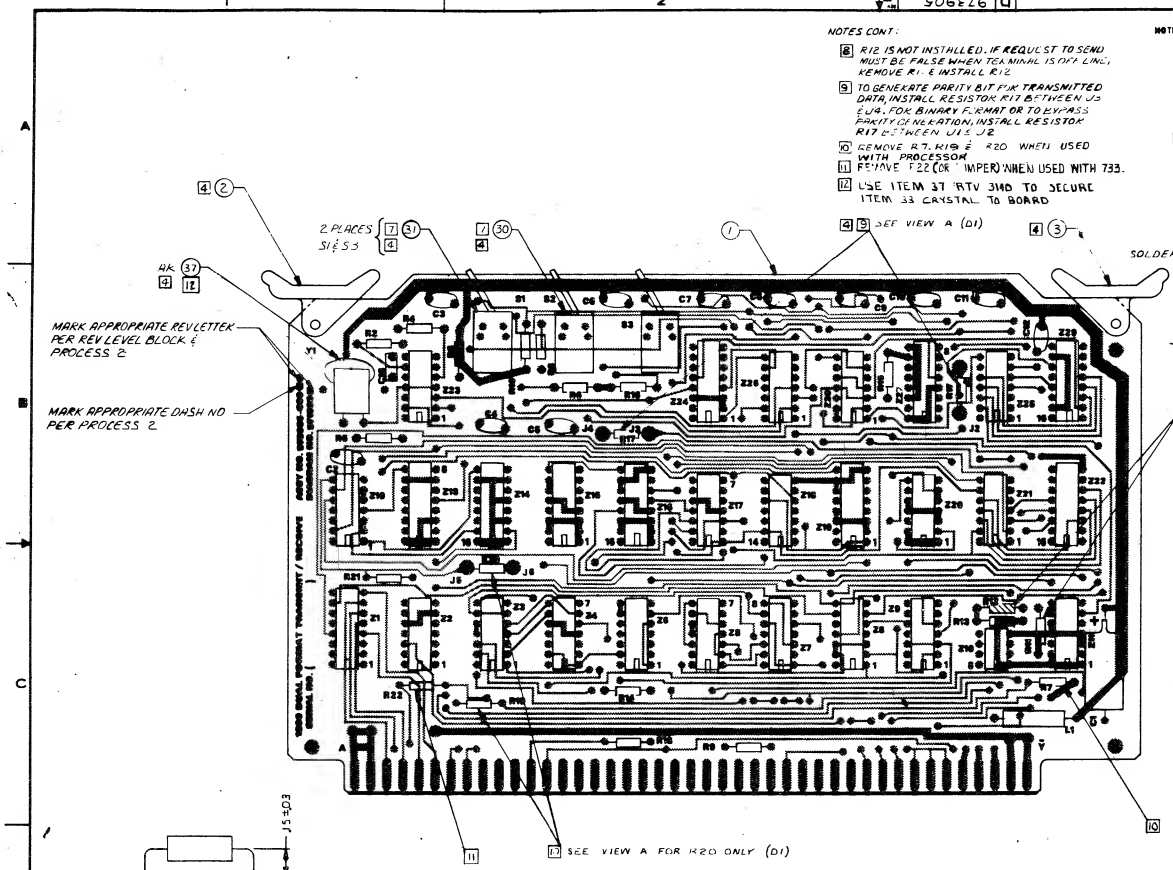

NOTES CONT:

8. R12 IS NOT INSTALLED. IF REQUEST TO SEND MUST BE FALSE WHEN TERMINAL IS OFF LINE, REMOVE R1. E INSTALL R12.
9. TO GENERATE PARITY BIT FOR TRANSMITTED DATA, INSTALL RESISTOR R17 BETWEEN J3 & J4. FOR BINARY FORMAT OR TO BYPASS PARITY GENERATION, INSTALL RESISTOR R17 BETWEEN J15 & J2.
10. REMOVE R7, R18 & R20 WHEN USED WITH PROCESSOR
11. REMOVE F22 (OR JUMPER) WHEN USED WITH 733.
12. USE ITEM 37 RTV 3140 TO SECURE ITEM 33 CRYSTAL TO BOARD

NOTES UNLESS OTHERWISE SPECIFIED

1) DO NOT CLINCH COMPONENT LEADS
2) DO NOT SOLDER ON COMPONENT SIDE
3) MASK ALL CONNECTOR FINGERS ON BOTH SIDES OF BOARD WHEN SOLDERING TO PREVENT SOLDER FROM WICKING DOWN CONNECTOR FINGERS

4. INSTALLED AFTER WAVE SOLDERING
5) MAXIMUM COMPONENT HEIGHT FROM COMPONENT SIDE OF BOARD IS .375
6) MAXIMUM LEAD LENGTH FROM CONDUCTOR SIDE OF BOARD IS .062
7. TO PREVENT DAMAGE TO SWITCHES ITEM (30 & 31) SOLDER WITH LEVER IN POSITION SHOWN BELOW

NOTES CONT ZONE 3A

PROCESSES:

1. WAVE SOLDER F-129 AND/OR SOLDER PER F-IC1
2. RUBBER STAMP F-100, HEIGHT .03, COLOR BLACK

LTR	DESCRIPTION	DATE	APPD
A	391186 (D) 6-7-74 CHG: 1) ITEM 6 WAS P/N 230511-1000 ADD: 1) ITEM 7, 7A & 7B DELETE: 1) ITEM 40, P/N 955736-9901		
	FORMAL RELEASE		
B	391531 (E) 7-16-74	7-16-74	
	UPDATED REVISION LEVEL BLOCK		
C	391651 (E) 7-31-74	7-31-74	
	UPDATED REV LEVEL BLOCK		
D	391598 (D) 8-26-74	8-26-74	
	CHG: IT. 38 P/N WAS: 539493-0003 UPDATED REV LEVEL BLOCK		
E	395910 (D) 11-4-75	11-4-75	
	1. LM. ITEM 4 WAS 1/N 972824-0012		
F	392031 (D) 11-10-75 1) VIEW B, DIM J5±03 WAS .25±04 2) ON LM, ITEM 38 P/N WAS 539493-0001	11-10-75	
G	391861 (B) 12-9-75 REMOVE INFORMATION NOTE 10 REMOVE NOTE 12 REFERENCE FROM R18	12-9-75	
H	405836 (D) 12-29-75 ITEM 6 QTY WAS 1, ITEM 7 QTY WAS 0 MOVE NOTE FROM ITEM 7A TO ITEM 6A MOVE REF DES FROM ITEM 6A TO ITEM 7A	12-29-75	
J	416939 (B) 12-28-76	1-2-77	
	1) ADDED JUMPER FROM PIN 3 TO J5 2) ADD NOTE 11		
K	CN 416888	2/8/77	
	1) CHANGED NOTE 11 WAS "REMOVE JUMPER BETWEEN EDGE BOARD CONN. PINS 3 & 10 WHEN USED WITH 733" 2) ADDED R22 TO ASSY 3) LM: ITEM 10 QTY WAS 5 4) LM: DELETED ITEM 43 P/N WAS 538347-1999		
L	CN 424040	6-1-77	
	1) ADD NOTE 12. (2) ITEM 37 PN WAS 411400-20		

FOR REVISION STATUS SEE DWG. 386410

PRINTED WIRING BOARD ASSY (973904-0001)
LOAD DIAGRAM FOR 0001 ASSY (971503-0001)
ASSEMBLY (973905)

0002	0001	ITEM NO.	UNIT QTY REQ'D	UNIT MEAS	PART NUMBER	DESCRIPTION	VENDOR PART NUMBER
						LIST OF MATERIALS	

PROCESSES ZONE 2D

PART NO	SIZE	REF ASSY DWG NO
B726	E	974002
B734	E	974002

TEXAS INSTRUMENTS INCORPORATED
INDUSTRIAL PRODUCTS DIVISION
HOUSTON, TEXAS

1200 DUAL FORMAT XMT/RCV

DRAWING NO. D 973905

PART NUMBER	REV	DESCRIPTION
C9739C5-0001	L	1200 DUAL FORMAT TRANSMIT/RECEIVE

ITEM.	QUANTITY.	COMPONENT..	DESCRIPTION	UM
0001	00001.000	0973904-0001	PWB,1200 DUAL FORMAT TRANSMIT/RECEIVE	EA
0002	00001.000	0413277-0001	EJECTOR,PCB,NON-LOCKING,WHITE	EA
			SCA - S--00(NATURAL)	
0003	00001.000	0413277-0005	EJECTOR,PCB,NON-LOCKING,D.GREEN	EA
			SCA - S--00(D.GREEN)	
0004	00001.000	0972924-0011	CAP FIX TANT SOLID 6R MFD 10 % 15 VOLT	EA
			QPL - M3-003/1-2274	
0004A			C1	
			QPL - M3-003/1-2274	
0005	00011.000	0532736-0002	CAP FIX CERAMIC .02 MF 20/80% 25 VOLT	EA
			CRL - 2-DU60E203ZAC	
0005A			C2 THR C12	
			CRL - 2-DU60E203ZAC	
0006	00000.000	0972929-0421	CAP FIX CERAMIC .022 UF 10 % 50 V	EA
			QPL - M3-014/01-1421	
0006A			THIS ITEM CAN BE USED AS AN	
			QPL - M3-014/01-1421	
0006B			ALTERNATE ITEM TO ITEM 7	
			QPL - M3-014/01-1421	
0007	00001.000	0972965-0016	CAP FIX CERAMIC .022 MF 10% 100V	EA
			QPL - C-068X223K	
0007A			C13	
			QPL - C-068X223K	
0008	00002.000	0972946-0057	RES FIX 47O OHM 5 % .25 W CARBON FILM	EA
			ROH - R-25	
0008A			R2,R5	
			ROH - R-25	
0009	00012.000	0972946-0072	RES FIX 2.0K OHM 5 % .25 W CARBON FILM	EA
			ROH - R-25	
0009A			R3,R4,R6,R7,R8,R9,R10,R13,	
			ROH - R-25	
0009B			R14,R15,R16,R21	
			ROH - R-25	
0010	00006.000	0972946-0017	RES FIX 10.0 OHM 5 % .25 W.CARBON FILM	EA
			ROH - R-25	
0010A			R18 R19 R11 R17 R20 R22	
			ROH - R-25	
0012	00004.000	0222222-7400	NETWORK SN74CON	EA
			- 3-000	
0012A			Z3,Z6,Z8,Z23	
			- 3-000	
0013	00002.000	0222222-7402	NETWORK SN7402N	EA
			TI- - SN-402N	
0013A			Z5,Z12	
			TI- - SN-402N	
0014	00001.000	0222222-7403	NETWORK SN7403N	EA
0014A			Z7	
0015	00002.000	0222222-7404	NETWORK SN7404N	EA
0015A			Z9,Z18	
0016	00004.000	0222222-7474	NETWORK SN7474N	EA
			- 3-000	
0016A			Z4,Z17,Z25,Z26	
			- 3-000	
0017	00003.000	0222222-7497	NETWORK SN7497N	EA
0017A			Z15,Z16,Z19	
0018	00001.000	0222222-7492	NETWORK-SN7492N	EA
0018A			Z2	
0019	00001.000	0222222-7111	NETWORK SN74111N	EA
0019A			Z24	
0020	00002.000	0222222-7161	NETWORK SN74161N	EA
			- SN-4161N	
0020A			Z13,Z14	
			- SN-4161N	
0021	00002.000	0222222-7197	NETWORK SN74197N	EA
0021A			Z11,Z20	
0022	00001.000	0222222-7193	NETWORK SN74193N	EA
			- SN-4193N	

PART NUMBER	REV	DESCRIPTION
0973905-0001	L	1200 DUAL FORMAT TRANSMIT/RECEIVE

ITEM.	QUANTITY.	COMPONENT..	DESCRIPTION	UM
0022A			Z27	
			- SN-4193N	
0023	00002.000	0222222-7164	NETWORK SN74164N	EA
			TI- - SN-4164N	
0023A			Z21,Z28	
			TI- - SN-4164N	
0024	00002.000	0222222-7165	NETWORK SN74165N	EA
0024A			Z22,Z29	
0026	00001.000	0537948-0001	NETWORK SN75150P	EA
			TI - SN-5150P	
0026A			Z10	
			TI - SN-5150P	
0027	00001.000	0537947-0001	NETWORK SN75154N	EA
			TI - SN-5154N	
0027A			Z1	
			TI - SN-5154N	
0030	00001.000	0235722-0006	SWITCH SUBMINI. TOGGLE 2 POSITION	EA
			- C-CT8201	
0030A			S2	
			- C-CT8201	
0031	00002.000	0235665-1075	SWITCH SUBMINI TOGGLE-CENTER OFF	EA
			- C-CT8206	
0031A			S1,S3	
			- C-CT8206	
0033	00001.000	0538031-0006	CRYSTAL UNIT QUARTZ 13.5168 MHZ .005%	EA
			MIL - CR-0A/U13.5168	
0033A			Y1	
			MIL - CR-0A/U13.5168	
0035	00001.000	0538433-0001	COIL RF 5.60 UH .13 OHM 885 MA LT10K158	EA
			CPL - M-90542-14	
0035A			L1	
			QPL - M-90542-14	
0037	AR	0417559-0001	SILICONE RUBBER (RTV) DOW 3140	TU
			SEE - T- DRAWING	
0038	00006.000	0972736-0014	SOCKET,GLD SPRING,TIN EYLT-.025 PIN DIA	EA
0038A			J1 THRU J6	
0039	REF	0971509-9901	DIAG,LGC,DET-1200 DUAL FORMAT T/R	EA
0041	REF	0955771-9901	TEST PRGM,1200 DUAL FORMAT XMIT/RCVE	EA
0042	REF	0974074-9901	THEORY OF OPR,1200DUAL FORM AT XMIT/RCVE	EA

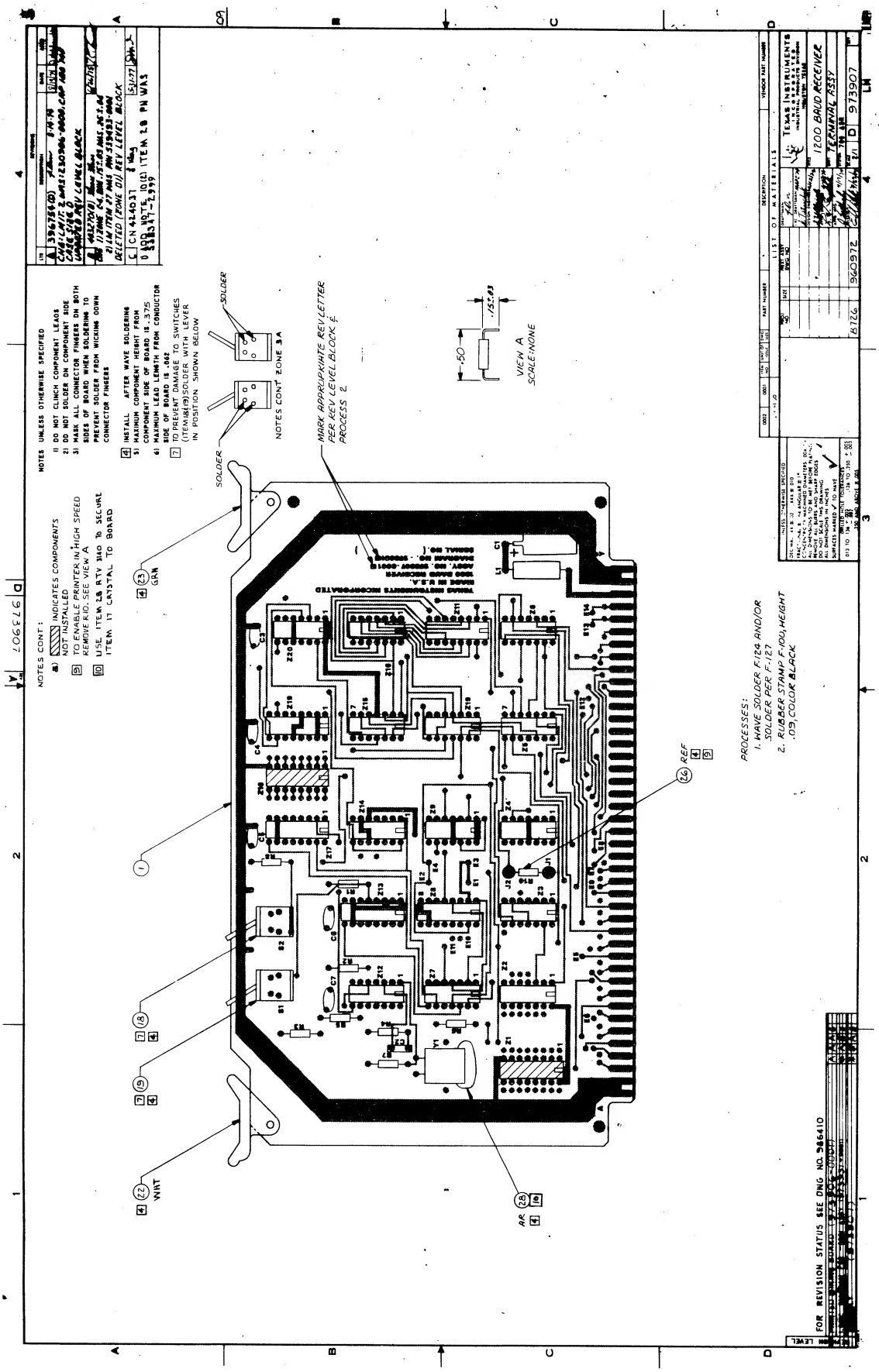
NOTES UNLESS OTHERWISE SPECIFIED
1) DO NOT CLINCH COMPONENT LEADS
2) DO NOT SOLDER ON COMPONENT SIDE
3) MASK ALL CONNECTOR FINGERS ON BOTH SIDES OF BOARD WHEN SOLDERING TO PREVENT SOLDER FROM WICKING DOWN CONNECTOR FINGERS
4) INSTALL AFTER WAVE SOLDERING
5) MAXIMUM COMPONENT HEIGHT FROM COMPONENT SIDE OF BOARD IS .375
6) MAXIMUM LEAD LENGTH FROM CONDUCTOR SIDE OF BOARD IS .062
7) TO PREVENT DAMAGE TO SWITCHES (ITEMS 18,19) SOLDER WITH LEVER IN POSITION SHOWN BELOW
NOTES CONT:
a) INDICATES COMPONENTS NOT INSTALLED
8) TO ENABLE PRINTER IN HIGH SPEED REMOVE R10, SEE VIEW A
9) USE ITEM 1,8 RTV 3140 TO SECURE ITEM 17 CRYSTAL TO BOARD
SOLDER
NOTES CONT ZONE 3A
MARK APPROPRIATE REV LETTER PER REV LEVEL BLOCK E PROCESS 2
VIEW A SCALE-NONE
PROCESSES:
1. WAVE SOLDER F-124 AND/OR SOLDER PER F-127
2. RUBBER STAMP F-100, HEIGHT .09, COLOR BLACK
TEXAS INSTRUMENTS
1200 BAUD RECEIVER
TERMINAL ASSY
973907
FOR REVISION STATUS SEE DWG NO. 986410

PART NUMBER	REV	DESCRIPTION.....
0973907-0001	C	1200 BAUD RECEIVER

ITEM.	QUANTITY.	COMPONENT..	DESCRIPTION.....	UM
0001	00001.000	0973906-0001	PWB 1200 BAUD RECEIVER	EA
0002	00001.000	0972924-0011	CAP FIX TANT SOLID 68 MFD 10 % 15 VOLT	EA
			QPL - M3-003/1-2274	
0002A			C1	
			QPL - M3-003/1-2274	
0003	00005.000	0532736-0002	CAP FIX CERAMIC .02 MF 20/80% 25 VOLT	EA
			CRL - 2-DU60E203ZAC	
0003A			C3,C4,C5,C6,C7	
			CRL - 2-DU60E203ZAC	
0004	00001.000	0538433-0001	COIL RF 5.60 LH .13 OHM 885 MA LT10K158	EA
			QPL - M-90542-14	
0004A			L1	
			QPL - M-90542-14	
0005	00001.000	0972965-0016	CAP FIX CERAMIC .022 MF 10% 100V	EA
			QPL - C-068X223K	
0005A			C2	
			QPL - C-068X223K	
0006	00003.000	0222222-7400	NETWORK SN7400N	EA
			- 3-000	
0006A			Z2,Z10,Z12	
			- 3-000	
0008	00001.000	0222222-7403	NETWORK SN7403N	EA
0008A			Z5	
0009	00002.000	0222222-7404	NETWORK SN7404N	EA
0009A			Z6,Z7	
0010	00003.000	0222222-7474	NETWORK SN7474N	EA
			- 3-000	
0010A			Z15,Z20,Z3	
			- 3-000	
0011	00001.000	0222222-7492	NETWORK-SN7492N	EA
0011A			Z14	
0012	00002.000	0222222-7497	NETWORK SN7497N	EA
0012A			Z8,Z19	
0013	00002.000	0222222-7161	NETWORK SN74161N	EA
			- SN-4161N	
0013A			Z13,Z17	
			- SN-4161N	
0014	00001.000	0222222-7164	NETWORK SN74164N	EA
			TI- - SN-4164N	
0014A			Z16	
			TI- - SN-4164N	
0015	00001.000	0222222-7165	NETWORK SN74165N	EA
0015A			Z11	
0016	00002.000	0222222-7197	NETWORK SN74197N	EA
0016A			Z4,Z9	
0017	00001.000	0538C31-0006	CRYSTAL UNIT QUARTZ 13.5168 MHZ .005%	EA
			MIL - CR-0A/U13.5168	
0017A			Y1	
			MIL - CR-0A/U13.5168	
0018	00001.000	0235722-0006	SWITCH SUBMINI. TOGGLE 2 POSITION	EA
			- C-CT8201	
0018A			S2	
			- C-CT8201	
0019	00001.000	0235665-1075	SWITCH SUBMINI TOGGLE-CENTER OFF	EA
			- C-CT8206	
0019A			S1	
			- C-CT8206	
0020	00002.000	0972946-0057	RES FIX 470 OHM 5 % .25 W CARBON FILM	EA
			ROH - R-25	
0020A			R4,R7	
			ROH - R-25	
0021	00006.000	0972946-0072	RES FIX 2.0K OHM 5 % .25 W CARBON FILM	EA
			ROH - R-25	
0021A			R1,R2,R3,R5,R6,R8	
			ROH - R-25	
0022	00001.000	0413277-0001	EJECTOR,PCB,NON-LOCKING,WHITE	EA
			SCA - S--00(NATURAL)	

PART NUMBER	REV	DESCRIPTION
0973907-0001	C	1200 BAUD RECEIVER

ITEM.	QUANTITY.	COMPONENT..	DESCRIPTION	UM
0023	00001.000	0413277-0009	EJECTOR,PCB,NON-LOCKING,D.GREEN SCA - S--001(D.GREEN)	EA
0024	REF	0973931-9901	DIAGRAM,LOGIC FOR 1200 BAUD RECEIVER	EA
0025	REF	0960994-9901	TEST PROGRAM,1200 BAUD RECEIVER	EA
0026	00001.000	0972946-0017	RES FIX 10.0 OHM 5 % .25 W.CARBON FILM ROH - R-25	EA
0026A			R10 RCH - R-25	
0027	00002.000	0972736-0014	SOCKET,GLD SPRING,TIN EYLT-.025 PIN DIA	EA
0027A			J1 J2	
0028	AR	0417559-0001	SILICONE RUBBER (RTV) DOW 3140 SEE - T- DRAWING	TU

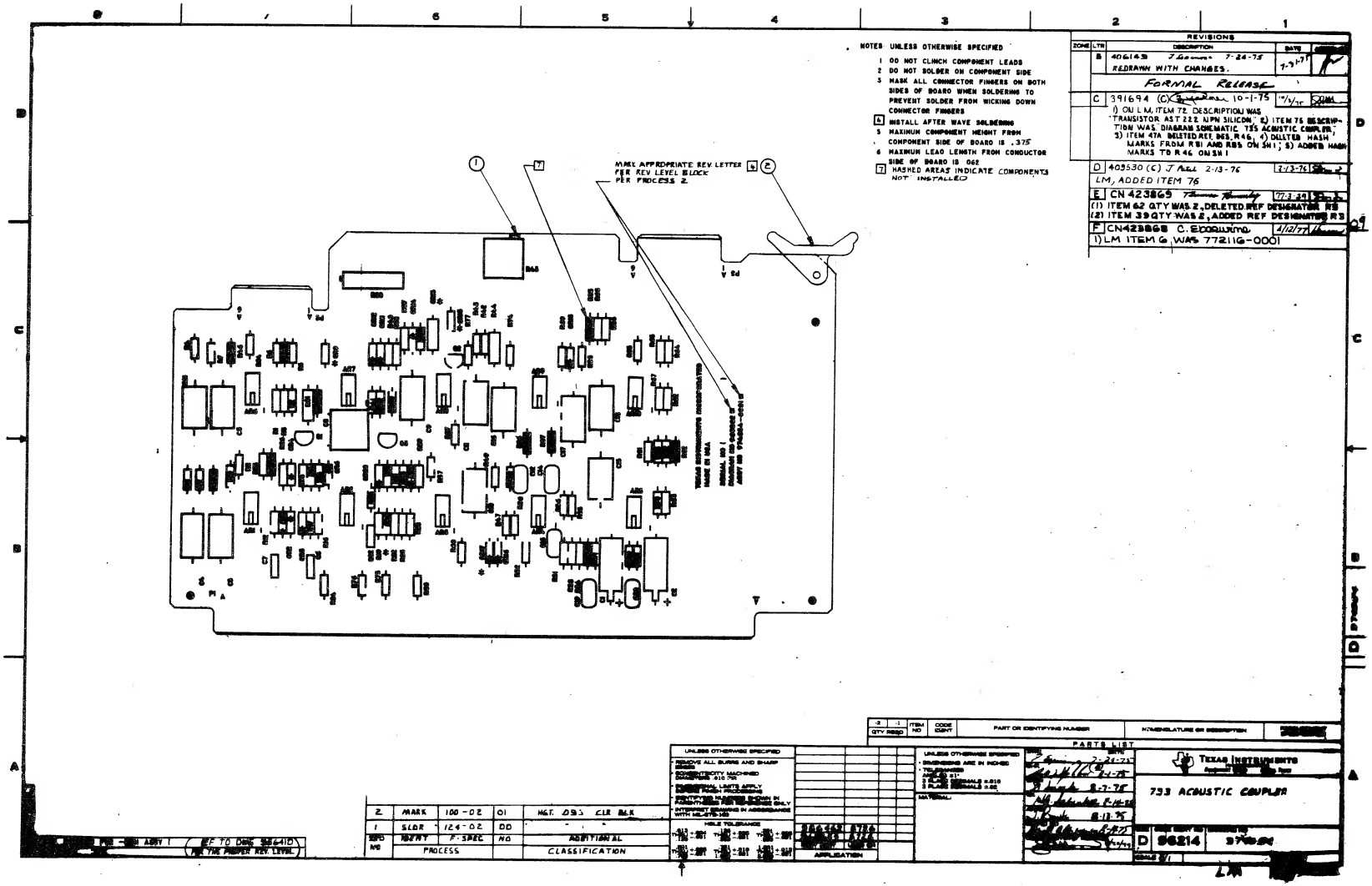
NOTES UNLESS OTHERWISE SPECIFIED
1 DO NOT CLINCH COMPONENT LEADS
2 DO NOT SOLDER ON COMPONENT SIDE
3 MASK ALL CONNECTOR FINGERS ON BOTH SIDES OF BOARD WHEN SOLDERING TO PREVENT SOLDER FROM WICKING DOWN CONNECTOR FINGERS
4 INSTALL AFTER WAVE SOLDERING
5 MAXIMUM COMPONENT HEIGHT FROM COMPONENT SIDE OF BOARD IS .375
6 MAXIMUM LEAD LENGTH FROM CONDUCTOR SIDE OF BOARD IS .062
7 HASHED AREAS INDICATE COMPONENTS NOT INSTALLED
MARK APPROPRIATE REV. LETTER PER REV LEVEL BLOCK PER PROCESS 2
REVISIONS
ZONE LTR DESCRIPTION DATE
B 406143 7-24-75
REDRAWN WITH CHANGES.
FORMAL RELEASE
C 391694 (C) 10-1-75
1) ON LM, ITEM 72 DESCRIPTION WAS "TRANSISTOR AST 222 NPN SILICON"; 2) ITEM 75 DESCRIPTION WAS "DIAGRAM SCHEMATIC 755 ACOUSTIC COUPLER"; 3) ITEM 47A DELETED REF. DES. R46, 4) DELETED HASH MARKS FROM R81 AND R85 ON SH 1; 5) ADDED HASH MARKS TO R46 ON SH 1
D 409530 (C) 2-13-76
LM, ADDED ITEM 76
E CN 423869 77-3-29
(1) ITEM 62 QTY WAS 2, DELETED REF DESIGNATOR R3
(2) ITEM 39 QTY WAS 2, ADDED REF DESIGNATOR R3
F CN423868 C. Eberwine 4/12/77
1) LM ITEM 6 WAS 772116-0001
PARTS LIST
TEXAS INSTRUMENTS
733 ACOUSTIC COUPLER
D 96214
2 MARK 100-02 01 HGT. 093 CLR BLK
1 SLDR 124-02 DD
NO NO ADDITIONAL
PROCESS CLASSIFICATION
REF TO DWG 96641D FOR THE PROPER REV. LEVEL
UNLESS OTHERWISE SPECIFIED
APPLICATION
LM

974054

MAY 13, 1977 LIST OF MATERIAL

PART NUMBER REV DESCRIPTION.....
0974054-0001 F BOARD ASSY,733 ACOUSTIC COUPLER

ITEM.	QUANTITY.	COMPONENT..	DESCRIPTION.....	UM
0001	00001.000	0974053-0001	PWB,733 ACOUSTIC COUPLER	EA
0002	00001.000	0413277-0006	EJECTOR,PCB,NON-LOCKING,GRAY	EA
			SCA - S--00(GRAY)	
0004	00009.000	0972463-0001	NETWORK,SN72558P/MC1458P1 OP AMP	EA
			SEE - T- DRAWING	
0004A			AR6,AR1,AR9,AR5,AR3,AR8,	
			SEE - T- DRAWING	
0004B			AR10,AR2,AR4	
			SEE - T- DRAWING	
0005	00001.000	0222225-2311	NETWORK LM311N,SN72311P	EA
			SEE - T- DRAWING	
0005A			AR7	
			SEE - T- DRAWING	
0006	00001.000	0996372-0001	TRANSISTOR,SKA3427 N-CHANNEL FET	EA
			TI - SK-3427	
0006A			Q3	
			TI - SK-3427	
0008	00019.000	0972932-0001	DIODE,1N9148 SWITCHING 75V P1V 75MA 4NS	EA
			TI - I-9148	
0008A			CR1 CR2 CR3 CR4 CR5 CR6 CR7	
			TI - I-9148	
0008B			CR8 CR16 CR17 CR18 CR19	
			TI - I-9148	
0008C			CR9 CR10 CR20	
			TI - I-9148	
0008D			CR11 CR12 CR13 CR14	
			TI - I-9148	
0010	00001.000	0972934-0006	DIODE,1N751A 5.1 V 5% SIL VOLT REG	EA
			QPL - 1-751A	
0010A			CR15	
			QPL - 1-751A	
0014	00002.000	0972924-0019	CAP FIX TANT SOLID 22 MFD 10 % 35 VOLT	EA
			QPL - M3-003/1-2306	
0014A			C1 C2	
			QPL - M3-003/1-2306	
0015	00001.000	0972225-0533	CAPACITOR,3.3 MF 50VT80-20% CERAMIC	EA
			SEE - T- DRAWING	
0015A			C8	
			SEE - T- DRAWING	
0016	00003.000	0419058-0003	CAP.FIX CERAMIC .05 MF 20V + 80/-20%	EA
			CRL - U-20-503	
0016A			C12 C19 C20	
			CRL - U-20-503	
0017	00011.000	0972476-0001	CAP,.01UF,1% 50WVDC MINIMUM	EA
			SEE - T- DRAWING	
0017A			C3 C4 C5 C9 C10 C11 C15 C16	
			SEE - T- DRAWING	
0017B			C17 C18 C21	
			SEE - T- DRAWING	
0018	00002.000	0972929-0411	CAP FIX CERAMIC .0056 UF 10% 100V	EA
			SEE - T- DRAWING	
0018A			C13 C14	
			SEE - T- DRAWING	
0019	00002.000	0972965-0004	CAP FIX CERAMIC 2200 PF 10% 200V	EA
			QPL - C-068X222K	
0019A			C6 C7	
			QPL - C-068X222K	
0020	00001.000	0972965-0024	CAP FIX CERAMIC .100 MF 10% 100V	EA
			QPL - C-068X104K	
0020A			C22	
			QPL - C-068X104K	
0021	00001.000	0972228-0008	RES,VAR 2 K-OHM CERMET ELEMENT	EA
			BOU - 30-6P-1-202	
0021A			R80	
			BOU - 30-6P-1-202	
0022	00001.000	0413808-0103	RESISTOR,VARIABLE 10K OHM WIREWOUND	EA
			BOU - 3-50P-1-103	
0022A			R45	
			BOU - 3-50P-1-103	
0027	00001.000	0972946-0065	RES FIX 1.0K OHM 5% .25 W CARBON FILM	EA
			ROH - R-25	
0027A			R32	
			ROH - R-25	
0028	00002.000	0972946-0069	RES FIX 1.5K OHM 5 % .25 W CARBON FILM	EA
			ROH - R-25	
0028A			R24 R47	
			ROH - R-25	
0029	00008.000	0972946-0076	RES FIX 3.0K OHM 5 % .25 W CARBON FILM	EA
			ROH - R-25	

MAY 13, 1977 LIST OF MATERIAL

PART NUMBER	REV	DESCRIPTION
0974054-0001	F	BOARD ASSY,733 ACOUSTIC COUPLER

ITEM.	QUANTITY.	COMPONENT..	DESCRIPTION	UM
0029A			R75 R76 R60 R52 R57 R58 R59	
			ROH - R-25	
0029B			R84	
			ROH - R-25	
0030	00002.000	0972946-0081	RES FIX 4.7K OHM 5 % .25 W CARBON FILM	EA
			ROH - R-25	
0030A			R30 R29	
			ROH - R-25	
0031	00001.000	0972946-0084	RES FIX 6.2K OHM 5 % .25 W CARBON FILM	EA
			ROH - R-25	
0031A			R25	
			ROH - R-25	
0032	00001.000	0972946-0087	RES FIX 8.2K OHM 5 % .25 W CARBON FILM	EA
			ROH - R-25	
0032A			R49	
			ROH - R-25	
0033	00005.000	0972946-0089	RES FIX 10K OHM 5% .25 W CARBON FILM	EA
			ROH - R-25	
0033A			R53 R54 R55 R56	
			ROH - R-25	
0033B			R50	
			ROH - R-25	
0034	00001.000	0972946-0091	RES FIX 12 K OHM 5% .25 W CARBON FILM	EA
			ROH - R-25	
0034A			R41	
			ROH - R-25	
0035	00001.000	0972946-0092	RES FIX 13 K OHM 5 % .25 W CARBON FILM	EA
			ROH - R-25	
0035A			R28	
			ROH - R-25	
0036	00001.000	0972946-0096	RES FIX 20 K OHM 5 % .25 W CARBON FILM	EA
			ROH - R-25	
0036A			R20	
			ROH - R-25	
0037	00001.000	0972946-0099	RES FIX 27 K OHM 5 % .25 W CARBON FILM	EA
			ROH - R-25	
0037A			R22	
			ROH - R-25	
0038	00002.000	0972946-0105	RES FIX 47 K OHM 5 % .25 W CARBON FILM	EA
			ROH - R-25	
0038A			R27 R26	
			ROH - R-25	
0039	00003.000	0972946-0110	RES FIX 75 K OHM 5 % .25 W CARBON FILM	EA
			ROH - R-25	
0039A			R14 R17 R3	
			ROH - R-25	
0040	00003.000	0972946-0113	RES FIX 100K OHM 5 % .25 W CARBON FILM	EA
			ROH - R-25	
0040A			R33 R21 R48	
			ROH - R-25	
0041	00001.000	0972946-0116	RES FIX 130K OHM 5 % .25 W CARBON FILM	EA
			ROH - R-25	
0041A			R23	
			ROH - R-25	
0042	00001.000	0972946-0117	RES FIX 150K OHM 5 % .25 W CARBON FILM	EA
			ROH - R-25	
0042A			R19	
			ROH - R-25	
0043	00002.000	0972946-0127	RES FIX 390K OHM 5 % .25 W CARBON FILM	EA
			ROH - R-25	
0043A			P16 R13	
			ROH - R-25	
0044	00002.000	0972946-0135	RES FIX 820K OHM 5 % .25 W CARBON FILM	EA
			ROH - R-25	
0044A			R15 R1	
			ROH - R-25	
0045	00002.000	0972946-0137	RES FIX 1.0M OHM 5 % .25 W CARBON FILM	EA
			ROH - R-25	
0045A			R51 R34	
			ROH - R-25	
0046	00001.000	0972946-0139	RES FIX 1.2M OHM 5 % .25 W CARBON FILM	EA
			ROH - R-25	
0046A			R18	
			ROH - R-25	
0047	00001.000	0972946-0025	RES FIX 22.0 OHM 5 % .25 W.CARBON FILM	EA
			ROH - R-25	
0047A			R7	
			ROH - R-25	
0049	00001.000	0972947-0057	RES FIX 470 OHM 5% .5 W CARBON FILM	EA
			ROH - R-50	

PART NUMBER REV DESCRIPTION.....
0974054-0001 F BOARD ASSY,733 ACOUSTIC COUPLER

ITEM.	QUANTITY.	COMPONENT..	DESCRIPTION.....	UM
0049A			R44	
			ROH - R-50	
0050	00001.000	0972947-0065	RES FIX 1.0K OHM 5% .5 W CARBON FILM	EA
			ROH - R-50	
0050A			R31	
			ROH - R-50	
0051	00001.000	0539370-0373	RES FIX FILM 750 OHM 1% .25 WATT	EA
			COR - N-55	
0051A			R9	
			COR - N-55	
0052	00001.000	0539370-0382	RES FIX FILM 931 OHM 1% .25 WATT	EA
			COR - N-55	
0052A			R5	
			COR - N-55	
0053	00001.000	0539370-0384	RES FIX FILM 976 OHM 1% .25 WATT	EA
			COR - N-55	
0053A			R77	
			COR - N-55	
0054	00001.000	0539370-0399	RES FIX FILM 1.40K OHM 1% .25 WATT	EA
			COR - N-55	
0054A			R11	
			COR - N-55	
0055	00001.000	0539370-0459	RES FIX FILM 5.90K OHM 1% .25 WATT	EA
			COR - N-55	
0055A			R43	
			COR - N-55	
0056	00001.000	0539370-0465	RES FIX FILM 6.81K OHM 1% .25 WATT	EA
			COR - N-55	
0056A			R8	
			COR - N-55	
0057	00001.000	0539370-0473	RES FIX FILM 8.25K OHM 1% .25 WATT	EA
			COR - N-55	
0057A			R2	
			COR - N-55	
0058	00001.000	0539370-0565	RES FIX FILM 75.0K OHM 1% .25 WATT	EA
			COR - N-55	
0058A			R12	
			COR - N-55	
0059	00001.000	0539370-0508	RES FIX FILM 19.1K OHM 1% .25 WATT	EA
0059A			R42	
			COR - N-55	
0060	00001.000	0539370-0561	RES FIX FILM 68.1K OHM 1% .25 WATT	EA
			COR - N-55	
0060A			R10	
			COR - N-55	
0061	00001.000	0539370-0569	RES FIX FILM 82.5K OHM 1% .25 WATT	EA
			COR - N-55	
0061A			R4	
			COR - N-55	
0062	00001.000	0539370-0606	RES FIX FILM 200 K OHM 1% .25 WATT	EA
			COR - N-55	
0062A			R6	
			COR - N-55	
0063	00001.000	0539812-0031	RES FIX FILM 9.24K OHM .1% .125 WATT	EA
			COR - N-4-50PPM/C	
0063A			R63	
			COR - N-4-50PPM/C	
0064	00001.000	0539812-0032	RES FIX FILM 10.5K OHM .1% .125 WATT	EA
			COR - N-4-50PPM/C	
0064A			R64	
			COR - N-4-50PPM/C	
0065	00004.000	0539812-0029	RES FIX FILM 7.15K OHM .1% .125 WATT	EA
			COR - N-4-50PPM/C	
0065A			R74 R71 R72 R73	
			COR - N-4-50PPM/C	
0066	00004.000	0539812-0030	RES FIX FILM 7.87K OHM .1% .125 WATT	EA
			COR - N-4-50PPM/C	
0066A			R69 R66 R67 R68	
			COR - N-4-50PPM/C	
0067	00003.000	0539812-0033	RES FIX FILM 23.2K OHM .1% .125 WATT	EA
			COR - N-4-50PPM/C	
0067A			R39 R40 R37	
			COR - N-4-50PPM/C	
0068	00002.000	0539812-0034	RES FIX FILM 31.6K OHM .1% .125 WATT	EA
			COR - N-4-50PPM/C	
0068A			R61 R62	
			COR - N-4-50PPM/C	
0069	00001.000	0539812-0039	RES FIX FILM 124K OHM .1% .125 WATT	EA
			COR - N-4-50PPM/C	

MAY 13, 1977 LIST OF MATERIAL

PART NUMBER REV DESCRIPTION.....
0974054-0001 F BOARD ASSY,733 ACOUSTIC COUPLER

ITEM.	QUANTITY.	COMPONENT..	DESCRIPTION.....	UM
0069A			R38	
			COR - N-4-50PPM/C	
0070	00002.000	0539370-0620	RES FIXED FILM 280 K OHMS 1% .25WATT	EA
			COR - NA-5D-100PPM/C	
0070A			R70 R65	
			COR - NA-5D-100PPM/C	
0072	00002.000	0972057-0001	TRANSISTOR-A5T2222 NPN SILICON	EA
			TI- - A5-2222	
0072A			Q1 Q2	
			TI- - A5-2222	
0073	00001.000	0539370-0585	RES FIX FILM 121K OHM 1% .25 WATT	EA
			COR - N-55	
0073A			R81	
			COR - N-55	
0074	00001.000	0539370-0602	RES FIX FILM 182 K OHM 1% .25 WATT	EA
			COR - N-55	
0074A			R85	
			COR - N-55	
0075	REF	0969502-9901	DIAGRAM SCHEMATIC 733 ACOUSTIC COUPLER	EA
0076	REF	0985889-9901	TEST PROGRAM,733 A/C BOARD ASSY	EA

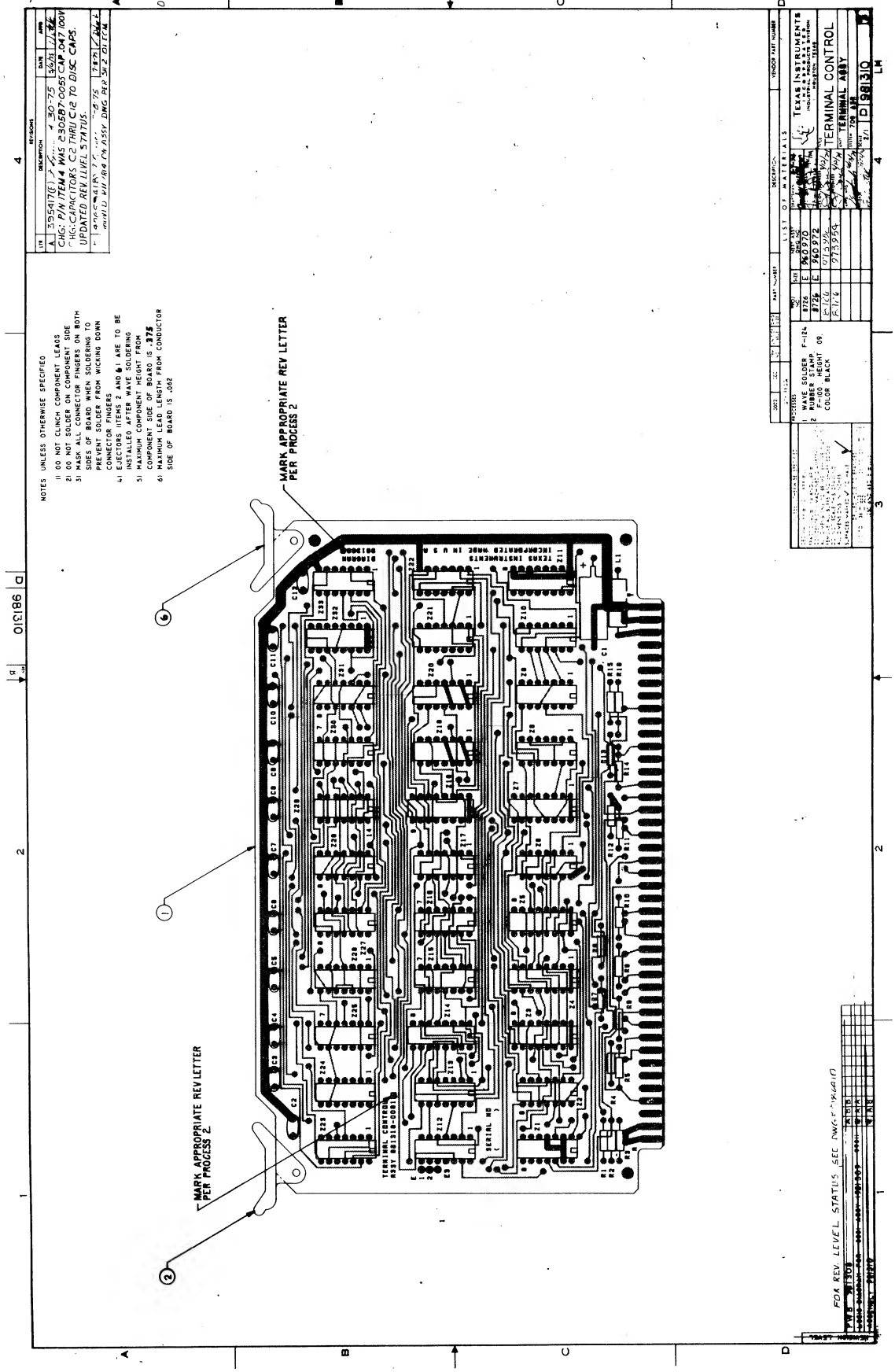
NOTES UNLESS OTHERWISE SPECIFIED
1) DO NOT CLINCH COMPONENT LEADS
2) DO NOT SOLDER ON COMPONENT SIDE
3) MASK ALL CONNECTOR FINGERS ON BOTH SIDES OF BOARD WHEN SOLDERING TO PREVENT SOLDER FROM WICKING DOWN CONNECTOR PINS
4) ELECTRICAL ITEMS 2 AND 6 ARE TO BE INSTALLED AFTER WAVE SOLDERING
5) MAXIMUM COMPONENT HEIGHT FROM COMPONENT SIDE OF BOARD IS .375
6) MAXIMUM LEAD LENGTH FROM CONDUCTOR SIDE OF BOARD IS .062
MARK APPROPRIATE REV LETTER PER PROCESS 2
MARK APPROPRIATE REV LETTER PER PROCESS 2
TEXAS INSTRUMENTS INCORPORATED
TERMINAL CONTROL
SERIAL NO
TEXAS INSTRUMENTS
TERMINAL CONTROL
TERMINAL ASSY
D 981310
FOR REV LEVEL STATUS SEE DWG 981310

PART NUMBER REV DESCRIPTION.....
981310-0001 B TERMINAL CONTROL,ASR

ITEM.	QUANTITY.	COMPONENT..	DESCRIPTION.....	UM	I
0001	00001.000	981308-0001	PWB,ASR TERMINAL CONTROL	EA	
0002	00001.000	231802-0009	EJECTOR WHT 8-200 - 0-000	EA	
0003	00001.000	972924-0011	CAP FIX TANT SOLID 68 MFD 10 % 15 VOLT QPL-M39003/1-2274	EA	
0003A			C1 QPL-M39003/1-2274		
0004	00011.000	532736-0002	CAP FIX CERAMIC .02 MF 20/80% 25 VOLT CRL- 2DDU60E203ZAC	EA	
0004A			C2 THRU C12 CRL- 2DDU60E203ZAC		
0005	00001.000	538433-0001	COIL RF 5.60 UH .13 OHM 885 MA LT10K158 QPL- MS90542-14	EA	
0005A			L1 QPL- MS90542-14		
0006	00001.000	231802-0004	EJECTOR YEL 8-200 SCA-8-200	EA	
0007	00002.000	222222-7400	NETWORK SN7400N - 3-000	EA	
0007A			Z12 Z30 - 3-000		
0008	00002.000	222222-7402	NETWORK SN7402N TI--SN7402N	EA	
0008A			Z23 Z27 TI--SN7402N		
0009	00004.000	222222-7408	NETWORK-SN7408N	EA	
0009A			Z2 Z8 Z15 Z31		
0010	00003.000	222222-7404	NETWORK SN7404N	EA	
0010A			Z10 Z13 Z16		
0011	00001.000	222222-7410	NETWORK SN7410N - 3-000	EA	
0011A			Z29 - 3-000		
0012	00002.000	222222-7427	NETWORK SN7427N TI--SN7427N	EA	
0012A			Z26 Z28 TI--SN7427N		
0013	00003.000	222222-7451	NETWORK SN7451N -SN7451N	EA	
0013A			Z17 Z24 Z25 -SN7451N		
0014	00004.000	222222-7474	NETWORK SN7474N - 3-000	EA	
0014A			Z1 Z19 Z20 Z33 - 3-000		
0015	00001.000	222222-7157	NETWORK SN74157N	EA	
0015A			Z14		
0016	00001.000	222222-7166	NETWORK SN74166N	EA	
0016A			Z11		
0017	00002.000	222222-7174	NETWORK SN74174N	EA	
0017A			Z5 Z18		
0018	00003.000	222222-7175	NETWORK SN74175N	EA	
0018A			Z3 Z4 Z7		
0019	00001.000	222222-7191	NETWORK SN74191N	EA	
0019A			Z32		
0020	00001.000	222222-7454	NETWORK SN7454N -SN7454N	EA	
0020A			Z21 -SN7454N		
0021	00001.000	222222-7425	NETWORK SN7425N	EA	
0021A			Z22		
0022	00001.000	222222-7437	NETWORK SN7437N	EA	

PART NUMBER REV DESCRIPTION.....
981310-0001 B TERMINAL CONTROL,ASR

ITEM.	QUANTITY.	COMPONENT..	DESCRIPTION.....	UM	I
0022A			Z9		
0023	00001.000	222222-7164	NETWORK SN74164N TI--SN74164N	EA	
0023A			Z6 TI--SN74164N		
0024	00016.000	972946-0072	RES FIX 2.0K OHM 5 % .25 W CARBON FILM ROH- R-25	EA	
0024A			R1 THRU R16 ROH- R-25		
0025	REF	981309-9901	DIAG,LOGIC DET.ASR TERMINAL CONTROL	EA	
0026	REF	955786-9901	PROGRAM TEST ASR TERMINAL CONTROL	EA	

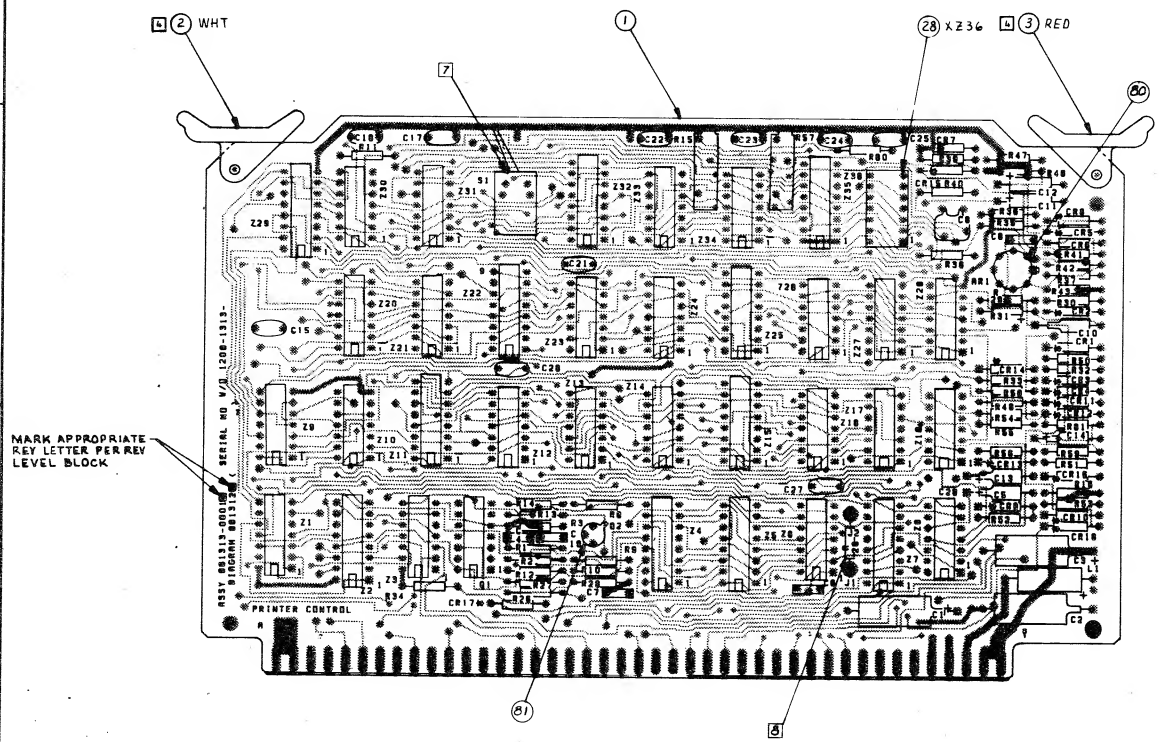

NOTES CONT

[8] REMOVE R20 TO DISABLE END OF LINE ALARM (VIEW A)

NOTES UNLESS OTHERWISE SPECIFIED

1. DO NOT CLINCH COMPONENT LEADS
2. DO NOT SOLDER ON COMPONENT SIDE
3. MASK ALL CONNECTOR FINGERS ON BOTH SIDES OF BOARD WHEN SOLDERING TO PREVENT SOLDER FROM WICKING DOWN CONNECTOR FINGERS
4. [4] INSTALL AFTER WAVE SOLDERING
5. MAXIMUM COMPONENT HEIGHT FROM COMPONENT SIDE OF BOARD IS .375
6. MAXIMUM LEAD LENGTH FROM CONDUCTOR SIDE OF BOARD IS .062
7. [7] SWITCH (ITEM 25) IS TO BE INSTALLED AFTER WAVE SOLDERING. TO PREVENT DAMAGE TO SWITCH, SOLDER WITH LEVER IN POSITION SHOWN BELOW

NOTES CONT ZONE D-5

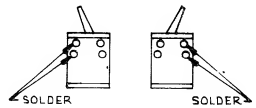

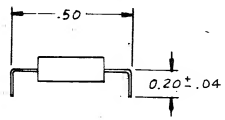

VIEW A
SCALE: NONE

REVISIONS

ZONE	LTR	DESCRIPTION	DATE	APPROVED
	A	399182 (C) Cindy Williams 12-10-74 ZONE B-6 Q2 WAS Q1	12-18-74	
	B	403238 (D) Bruce Jones 6/25/75 DELETED 1) FROM IT. 34A, R47. 2) FROM IT. 64A, C9 3) FROM IT. 47A, R27 4) FROM IT. 68A, C11 & C12 CHG 1) IT. 34 WAS QTY 5. 2) IT. 44 WAS P/N 372946-0100. 3) IT. 46 WAS P/N 539370-0525. 4) IT. 47 WAS QTY 2. 5) IT. 48 WAS P/N 539320-0453. 6) IT. 62 WAS P/N 372534-0019. 7) IT. 64 WAS QTY 4. 8) IT. 66 WAS QTY 3. 9) IT. 67 WAS P/N 372965-0020. 10) IT. 68 WAS QTY 3. 11) VIEW A DIM 0.20±.04 WAS 0.25±.04. 12) F/D PICTORIAL OF C8, C11 & C12 ADDED 1) TO 66A-C9. 2) ITEMS 82, 824, 83, 834, 84 & 844 DELETED 1) REV. LEVEL BLOCK.	7/11/75	
	C	410024 (B) Mike Wolf 5-13-76 ON F/D: ADDED CRIT. ON LM: CHANGED ITEM 60 QTY, WAS 16	5/13/76	
	D	415527 (E) Mike Wolf 10-7-76 ON F/D ADDED CRIT, ON LM CHANGED ITEM 60, QTY WAS 17	10/20/76	
	E	414641 (C) Mike Wolf 11-9-76 1) P/N ITEM 30 WAS 537570-0015	11/15/76	REC-79 PARSON

PARTS LIST

QTY REQD	ITEM NO	CODE IDENT	PART OR IDENTIFYING NUMBER	NOMENCLATURE OR DESCRIPTION	PROCUREMENT SPECIFICATION

PROCESSES

1 WAVE SOLDER PER F-124 AND (OR) SOLDER PER F-127

2 RUBBER STAMP PER F-100, HEIGHT, .09, COLOR BLACK

UNLESS OTHERWISE SPECIFIED:
- REMOVE ALL BURRS AND SHARP EDGES
- CONCENTRICITY MACHINED DIAMETERS .TIL FIR
- DIMENSIONAL LIMITS APPLY BEFORE FINISH PROCESSING
- IDENTIFYING NUMBERS SHOWN IN PARENTHESES FOR REFERENCE ONLY
- INTERPRET DRAWING IN ACCORDANCE WITH MIL STD 100

HOLE TOLERANCE

.01 THRU .093	±.004 ±1%	.094 THRU .500	±.005 ±1%	.501 THRU .750	±.006 ±1%
.751 THRU .500	±.008 ±1%	.501 THRU 1.000	±.010 ±1%	1.001 THRU 2.000	±.012 ±1%

929405	8726
NEXT ASSY	USED ON
APPLICATION	

UNLESS OTHERWISE SPECIFIED
- DIMENSIONS ARE IN INCHES
- TOLERANCES ANGLES ±1 3 PLACE DECIMALS ±.010 2 PLACE DECIMALS ±.02

MATERIAL

DWN	DATE 9-19-74
CHK	
ENGR	
QA	
APVD	10/4/74
CONTR NO.	
DESIGN ACTIVITY RELEASE	

TEXAS INSTRUMENTS INCORPORATED
Equipment Group Austin, Texas

PRINTER CONTROL

SIZE	CODE IDENT NO	DRAWING NO
D	96214	881313

SCALE 2/1 REV E

LM

FOR REV LEVEL STATUS OF DWG # 586410

PWB (suffix)	A	A	A
[redacted] 881312-9001	[redacted]	[redacted]	[redacted]
[redacted]	[redacted]	[redacted]	[redacted]

B-254

D 881313

PART NUMBER	REV	DESCRIPTION
0981313-0001	E	PRINTER CONTROL,PWB ASSEMBLY

ITEM.	QUANTITY.	COMPONENT..	DESCRIPTION	UM
0001	00001.000	0981311-0001	PWB,PRINTER CONTROL	EA
0002	00001.000	0413277-0001	EJECTOR,PCB,NON-LOCKING,WHITE SCA - S--001(NATURAL)	EA
0003	00001.000	0413277-0015	EJECTOR,PCB,NON-LOCKING,C.RED SCA - S--001(C.RED)	EA
0004	REF	0981312-9901	DIA,LOGIC PRINTER CONTROL	EA
0005	REF	0955788-9901	PROGRAM TEST PRINXER CONTROL	EA
0006	00001.000	0226748-0011	NETWORK ROM SN37228 - SN-7228	EA
0006A			Z5 - SN-7228	
0007	00004.000	0222222-7400	NETWORK SN7400N - 3-000	EA
0007A			Z21,Z24,Z26,Z9 - 3-000	
0008	00004.000	0222222-7402	NETWORK SN7402N TI- - SN-402N	EA
0008A			Z1,Z3,Z17,Z31 TI- - SN-402N	
0009	00001.000	0222222-7403	NETWORK SN7403N	EA
0009A			Z18	
0010	00002.000	0222222-7404	NETWORK SN7404N	EA
0010A			Z20,Z33	
0011	00001.000	0222222-7409	NETWORK-SN7409N	EA
0011A			Z27	
0012	00001.000	0222222-7410	NETWORK SN7410N - 3-000	EA
0012A			Z28 - 3-000	
0013	00003.000	0222222-7427	NETWORK SN7427N TI- - SN-427N	EA
0013A			Z10,Z16,Z30 TI- - SN-427N	
0014	00001.000	0240000-7454	NETWORK-SN74H54N	EA
0014A			Z23	
0015	00002.000	0222222-7474	NETWORK SN7474N - 3-000	EA
0015A			Z13,Z14 - 3-000	
0016	00002.000	0222222-7497	NETWORK SN7497N	EA
0016A			Z11,Z35	
0017	00001.000	0222222-7121	NETWORK SN74121N	EA
0017A			Z8	
0018	00001.000	0222222-7132	NETWORK SN74132N X	EA
0018A			Z12	
0019	00001.000	0222222-7161	NETWORK SN74161N - SN-4161N	EA
0019A			Z25 - SN-4161N	
0020	00001.000	0222222-7164	NETWORK SN74164N TI- - SN-4164N	EA
0020A			Z34 TI- - SN-4164N	
0021	00002.000	0222222-7174	NETWORK SN74174N	EA
0021A			Z2,Z4	
0022	00004.000	0222222-7175	NETWORK SN74175N	EA
0022A			Z7,Z22,Z29,Z32	
0023	00001.000	0222222-7191	NETWORK SN74191N	EA

PART NUMBER	REV	DESCRIPTION
0901313-0001	E	PRINTER CONTROL,PWB ASSEMBLY

ITEM.	QUANTITY.	COMPONENT..	DESCRIPTION	UM
0023A			Z15	
0025	00001.000	0235722-0006	SWITCH SUBMINI. TOGGLE 2 POSITION	EA
			- C-CT8201	
0025A			S1	
			- C-CT8201	
0026	00001.000	0539329-0002	RESISTOR,FIXED-ARRAY,14 PINS 2000. OHM	EA
0026A			Z6	
0028	00001.000	0539544-0001	SOCKET,14PIN IC LOW PROFILE SOLDER TAIL	EA
			TI - C9--14-02	
0028A			XZ36	
			TI - C9--14-02	
0030	00002.000	0972877-0015	RES,VAR 50K 0.75 WATT 10%	EA
			BOU - 3-09P-1-503	
0030A			R15 R57	
			BEC - 79-R50K	
0032	00002.000	0972946-0085	RES FIX 6.8K OHM 5 % .25 W CARBON FILM	EA
			ROH - R-25	
0032A			K1,R3	
			ROH - R-25	
0033	00002.000	0972946-0077	RES FIX 3.3K OHM 5 % .25 W CARBON FILM	EA
			ROH - R-25	
0033A			R2,R13	
			ROH - R-25	
0034	00004.000	0972946-0089	RES FIX 10 K OHM X % .25 W CARBON FILM	EA
			ROH - R-25	
0034A			R8 R12 R14 R60	
			ROH - R-25	
0035	00001.000	0972946-0034	RES FIX 51.0 OHM 5 % .25 W.CARBON FILM	EA
			ROH - R-25	
0035A			R9	
			ROH - R-25	
0036	00003.000	0972946-0072	RES FIX 2.0K OHM 5 % .25 W CARBON FILM	EA
			ROH - R-25	
0036A			R10,R11,R43	
			ROH - R-25	
0038	00001.000	0972946-0017	RES FIX 10.0 OHM 5 % .25 W.CARBON FILM	EA
			ROH - R-25	
0038A			R20	
			ROH - R-25	
0039	00004.000	0972946-0058	RES FIX 510 OHM X % .25 W CARBON FILM	EA
			ROH - R-25	
0039A			R29,R38,R49,R61	
			ROH - R-25	
0040	00001.000	0972946-0061	RES FIX 680 OHM X % .25 W CARBON FILM	EA
			ROH - R-25	
0040A			R34	
			ROH - R-25	
0041	00001.000	0972946-0041	RES FIX 100 OHM 5 % .25 W CARBON FILM	EA
			ROH - R-25	
0041A			R40	
			ROH - R-25	
0042	00002.000	0972946-0065	RES FIX 1.0K OHM X % .25 W CARBON FILM	EA
			ROH - R-25	
0042A			R36,R41	
			ROH - R-25	
0043	00001.000	0972976-0183	RES FIX COMP 1/4 W 10 MEGOHM 5 %	EA
			QPL - RC-7G106JS	
0043A			R42	
			QPL - RC-7G106JS	
0044	00001.000	0539370-0623	RES FIX FILM 301 K OHM 1% .25 WATT	EA
			COR - N-55	
0044A			R48	
			COR - N-55	
0045	00001.000	0972946-0113	RES FIX 100K OHM 5 % .25 W CARBON FILM	EA
			ROH - R-25	
0045A			R53	
			ROH - R-25	
0046	00001.000	0539370-0493	RES FIX FILM 13.3K OHM 1% .25 WATT	EA
			COR - NA-5D-100PPM/C	
0046A			R26	
			COR - NA-5D-100PPM/C	
0047	00001.000	0539370-0469	RES FIX FILM 7.50K OHM 1% .25 WATT	EA
			COR - NA-5D-100PPM/C	
0047A			R55	
			COR - NA-5D-100PPM/C	
0048	00002.000	0539370-0423	RES FIX FILM 2.49K OHM 1% .25 WATT	EA
			COR - N-55	

PART NUMBER	REV	DESCRIPTION
0981313-0001	E	PRINTER CONTROL,PWB ASSEMBLY

ITEM.	QUANTITY.	COMPONENT..	DESCRIPTION	UM
0048A			R28 R39	
			COR - N-55	
0049	00001.000	0539370-0495	RES FIX FILM 14.0K OHM 1% .25 WATT	EA
			COR - N-55	
0049A			R30	
			COR - N-55	
0050	00001.000	0539370-0501	RES FIX FILM 16.2K OHM 1% .25 WATT	EA
			COR - N-55	
0050A			R31	
			COR - N-55	
0051	00003.000	0539370-0517	RES FIX FILM 23.7K OHM 1% .25 WATT	EA
			COR - N-55	
0051A			R32,R50,R16	
			COR - N-55	
0052	00001.000	0539370-0405	RES FIX FILM 1.62K OHM 1% .25 WATT	EA
			COR - N-55	
0052A			R33	
			COR - N-5	
0053	00001.000	0539370-0305	RES FIX FILM 147 X OHM 1% .25 WATT	EA
			COR - N-55	
0053A			R35	
			COR - N-55	
0054	00002.000	0539370-0417	RES FIX FILM 2.15K OHM 1% .25 WATT	EA
			COR - N-55	
0054A			R37,R54	
			COR - N-55	
0055	00002.000	0539370-0445	RES FIX FILM 4.22K OHM 1% .25 WATT	EA
			COR - N-55	
0055A			R51,R59	
			COR - N-55	
0056	00001.000	0539370-0539	RES FIX FILM 40.2K OHM 1% .25 WATT	EA
			COR - N-55	
0056A			R52	
			COR - N-55	
0057	00001.000	0539370-0437	RES FIX FILM 3.48K OHM 1% .25 WATT	EA
			COR - NA-5D-100PPM/C	
0057A			R56	
			COR - NA-5D-100PPM/C	
0058	00001.000	0539370-0509	RES FIX FILM 19.6K OHM 1% .25 WATT	EA
			COR - N-55	
0058A			R58	
			COR - N-55	
0060	00018.000	0972932-0001	DIODE,1N9148 SWITCHING 75V PIV 75MA 4NS	EA
			TI - I-9148	
0060A			CR1 THRU CR18	
			TI - I-9148	
0062	00002.000	0418356-2292	CAP FIX 33 MF 20V 10% TANTALUM SOLID	EA
			QPL - M3-003/1-2292	
0062A			C1 C3	
			QPL - M3-003/1-2292	
0063	00001.000	0972924-0011	CAP FIX TANT SOLID 68 MFD 10 % 15 VOLT	EA
			QPL - M3-003/1-2274	
0063A			C2	
			QPL - M3-003/1-2274	
0064	00003.000	0972965-0012	CAP FIX CERAMIC .010 MF 10% 200V	EA
			QPL - C-06BX103K	
0064A			C4 C7 C19	
			QPL - C-06BX103K	
0065	00002.000	0418356-2347	CAP FIX 0.33 MF 50V 10% TANTALUM SOLID	EA
			QPL - M3-003/1-2347	
0065A			C3,C10	
			QPL - M3-003/1-2347	
0066	00002.000	0972929-0397	CAP FIX CERAMIC .001 UF 10% 200V	EA
			QPL - M3-014/01-1397	
0066A			C6 C9	
			QPL - M3-014/01-1397	
0067	00001.000	0972927-0053	CAP FIX MICA .001 UF 100V 1%	EA
			QPL - C-R05E102DA	
0067A			C8	
			QPL - C-R05E102DA	
0068	00001.000	0972924-0021	CAP FIX TANT SOLID 1.0 MFD 10 % 50 VOLT	EA
			QPL - M3-003/1-2356	
0068A			C14	
			QPL - M3-003/1-2356	
0069	00001.000	0418356-2267	CAP FIX 2.7 MF 15V 10% TANTALUM SOLID	EA
			QPL - M3-003/1-2267	
0069A			C13	
			QPL - M3-003/1-2267	
0070	00011.000	0532736-0002	CAP FIX CERAMIC .02 MF 20/80% 25 VOLT	EA
			CRL - 2-0060E203ZAC	

PART NUMBER	REV	DESCRIPTION
0981313-0001	E	PRINTER CONTROL,PWB ASSEMBLY

ITEM.	QUANTITY.	COMPONENT..	DESCRIPTION	UM
0070A			C15,C16,C17,C21 THRU C28	
			CRL - 2-DU60E203ZAC	
0071	00001.000	0222225-0311	NETWORK LM311H	EA
0071A			AR1	
0073	00001.000	0972242-0001	TRANSISTOR MPQ2222/SQ1062 QUAD	EA
			- - -	
0073A			Q1	
			- - -	
0074	00001.000	0972958-0002	TRANSISTOR,2N2907A PNP GEN PURP SW TO-18	EA
			TI - 2-2907A	
0074A			Q2	
			TI - 2-2905A	
0076	00001.000	0538433-0001	COIL RF 5.60 UH .13 OHM 885 MA LT10K158	EA
			QPL - M-90542-14	
0076A			L1	
			QPL - M-90542-14	
0078	00002.000	0972736-0014	SOCKET,GLD SPRING,TIN EYLT-.025 PIN DIA	EA
0078A			J1,J2	
0080	00001.000	0232583-0005	PAD INTEGRATED CKT.TO-5 8 LEADS .350 DIA	EA
			THR - 77-7-107-N-WHT	
0081	00001.000	0185113-0001	X SPACER XST TO-18 CASE	EA
			* - -	
0082	00002.000	0535997-0028	CAP FIX MET POLYCARB.10 MF 1% 50V	EA
			TRW - X-63UW	
0082A			C11 C12	
			TRW - X-63UW	
0083	00001.000	0539370-0373	RES FIX FILM 750 OHM 1% .25 WATT	EA
			COR - N-55	
0083A			R27	
			COR - N-55	
0084	00001.000	0539370-0577	RES FIX FILM 100 X OHM 1% .25 WATT	EA
			COR - N-55	
0084A			R47	
			COR - N-55	

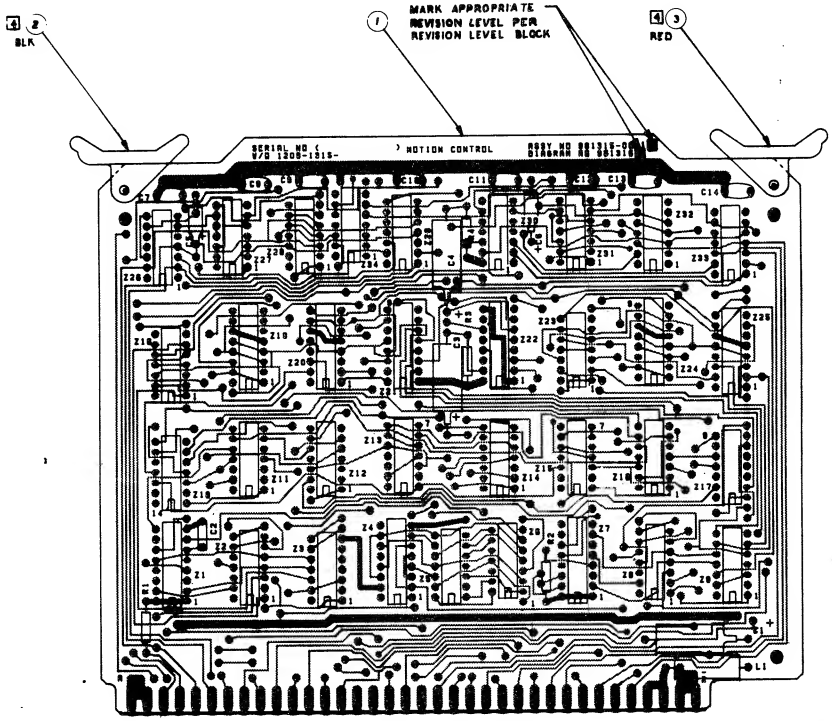

NOTES UNLESS OTHERWISE SPECIFIED

~~[illegible]~~

2) DO NOT SOLDER ON COMPONENT SIDE
3) MASK ALL CONNECTOR FINGERS ON BOTH SIDES OF BOARD WHEN SOLDERING TO PREVENT SOLDER FROM WICKING DOWN CONNECTOR FINGERS
4) EJECTORS (ITEMS 2 AND 31 ARE TO BE INSTALLED AFTER WAVE SOLDERING
5) MAXIMUM COMPONENT HEIGHT FROM COMPONENT SIDE OF BOARD IS .325
6) MAXIMUM LEAD LENGTH FROM CONDUCTOR SIDE OF BOARD IS .080

LTR	DESCRIPTION	DATE	APPD
A	391715 (B) L. Wheat 4-29-75	4-30-75	[illegible]
	ON F/D: 1) DELETED NOTE 1. ON LM: 2) ADDED ITEM 26. 3) CHANGED QTY, ITEM 4 WAS 4, ITEM 7 WAS 2. 4.) UPDATED REV LEVEL BLOCK		
B	403228 (C) L. Wheat 5-12-75	5/13/75	[illegible]
	ON LM: 1) CHANGED QTY OF ITEM 12, WAS 7. 2) ON ITEM 12A DELETED [illegible] & [illegible]. 3) ADDED ITEMS 27 & 27A.		
C	402195 (D) E.E. [illegible] 8-19-75	8-19-75	[illegible]
	ON F/D: 1. DELETED REF DESIGNATOR C15 (ZONE 2B) 2 DIAGRAM NO WAS 971316		
D	391794 (E) 8-21-75 [illegible]	[illegible]	[illegible]
	CHG LM IT 23 WAS P/N 972 946-0101		
E	CN 420109 J. Pierce	5-30-75	[illegible]
	1) NOTE 5, .325 WAS .375 (2) NOTE 6, .080 WAS .062		

PROCESSES:
1. WAVE SOLDER, F-124 AND (OR) HAND SOLDER PER F-14127
2. RUBBER STAMP, F-108, HEIGHT .09, COLOR BLACK

FOR REVISION STATUS SEE DWG 986410

PART NUMBER	DESCRIPTION	VENDOR PART NUMBER
8726	D 959389	
8726	A 986457	

LIST OF MATERIALS

TEXAS INSTRUMENTS INCORPORATED INDUSTRIAL PRODUCTS DIVISION HOUSTON 75266

MOTION CONTROL

TERMINAL ASSEMBLY

SCALE 2/1 D 981315

FILMED

PART NUMBER	REV	DESCRIPTION
0981315-0001	E	MOTION CONTROL

ITEM.	QUANTITY.	COMPONENT..	DESCRIPTION	UM
0001	00001.000	0981314-0001	PWB,MOTION CONTROL	EA
0002	00001.000	0533887-0003	EJECTOR,PCB,NON-LOCKING,BLACK	EA
			SCA - S--02 BLACK	
0003	00001.000	0533887-0005	EJECTOR,PCB,NON-LOCKING,RED	EA
			SCA - S--02 RED	
0004	00005.000	0222222-7400	NETWORK SN7400N	EA
			- 3-000	
0004A			Z12 Z17 Z26 Z30 Z34	
			- 3-000	
0005	00002.000	0222222-7402	NETWORK SN7402N	EA
			TI- - SN-402N	
0005A			Z10 Z15	
			TI- - SN-402N	
0006	00001.000	0222222-7403	NETWORK SN7403N	EA
0006A			Z6	
0007	00002.000	0222222-7404	NETWORK SN7404N	EA
0007A			Z14 Z16	
0008	00005.000	0222222-7408	NETWORK-SN7408N	EA
0008A			Z2 Z5 Z8 Z27 Z31	
0009	00002.000	0222222-7410	NETWORK SN7410N	EA
			- 3-000	
0009A			Z29 Z33	
			- 3-000	
0010	00004.000	0222222-7427	NETWORK SN7427N	EA
			TI- - SN-427N	
0010A			Z3 Z9 Z28 Z32	
			TI- - SN-427N	
0011	00001.000	0222222-7451	NETWORK SN7451N	EA
			- SN-451N	
0011A			Z13	
			- SN-451N	
0012	00005.000	0222222-7109	NETWORK SN74109N	EA
0012A			Z19 Z20 Z21 Z24 Z25	
0013	00001.000	0222222-7157	NETWORK SN74157N	EA
0013A			Z4	
0014	00002.000	0222222-7174	NETWORK SN74174N	EA
0014A			Z1 Z7	
0015	00001.000	0972159-7221	NETWORK SN74221N	EA
			TI- - SN-4221N	
0015A			Z22	
			TI- - SN-4221N	
0016	00008.000	0532736-0002	CAP FIX CERAMIC .02 MF 20/80% 25 VOLT	EA
			CRL - 2-DU60E203ZAC	
0016A			C7 THRU C14	
			CRL - 2-DU60E203ZAC	
0017	00001.000	0972924-0011	CAP FIX TANT SOLID 68 MFD 10 % 15 VOLT	EA
			QPL - M3-003/1-2274	
0017A			C1	
			QPL - M3-003/1-2274	
0018	00001.000	0972965-0012	CAP FIX CERAMIC .010 MF 10% 200V	EA
			QPL - C-06BX103K	
0018A			C2	
			QPL - C-06BX103K	
0019	00002.000	0972924-0007	CAP FIX TANT SOLID 120 MFD 10 % 10 VOLT	EA
			QPL - M3-003/1-2263	
0019A			C3 C4	
			QPL - M3-003/1-2263	
0020	00002.000	0972924-0017	CAP FIX TANT SOLID 1.0 MFD 10 % 35 VOLT	EA
			SPR - 15-D105X9035A	
0020A			C5 C6	
			SPR - 15-D105X9035A	
0021	00001.000	0538433-0001	COIL RF 5.60 UH .13 OHM 885 MA LT10K15B	EA
			QPL - M-90542-14	
0021A			L1	
			QPL - M-90542-14	
0022	00002.000	0972946-0045	RES FIX 150 OHM 5 % .25 W CARBON FILM	EA
			ROH - R-25	

PART NUMBER	REV	DESCRIPTION
0981315-0001	E	MOTION CONTROL

ITEM.	QUANTITY.	COMPONENT..	DESCRIPTION	UM
0022A			R1 R2	
			ROH - R-25	
0023	0002.000	0972946-0105	RES FIX 47 K OHM 5 % .25 W CARBON FILM	EA
			ROH - R-25	
0023A			R3 R4	
			ROH - R-25	
0024	REF	0981316-9901	DIAGRAM LOGIC MOTION CONTROL	EA
0025	REF	0955789-9901	TEST PROGRAM MOTION CONTROL ATS960	EA
0026	0001.000	0222222-7437	NETWORK SN7437N	EA
0026A			Z11	
0027	0002.000	0222222-7407	NETWORK SN74107N	EA
0027A			Z18 Z23	

NOTES UNLESS OTHERWISE SPECIFIED

1) DO NOT CLINCH COMPONENT LEADS
2) DO NOT SOLDER ON COMPONENT SIDE
3) MASK ALL CONNECTOR FINGERS ON BOTH SIDES OF BOARD WHEN SOLDERING TO PREVENT SOLDER FROM WICKING DOWN CONNECTOR FINGERS
4) EJECTORS (ITEMS 2 AND 3) ARE TO BE INSTALLED AFTER WAVE SOLDERING
5) MAXIMUM COMPONENT HEIGHT FROM COMPONENT SIDE OF BOARD IS .325.
6) MAXIMUM LEAD LENGTH FROM CONDUCTOR SIDE OF BOARD IS .080
7. TO STOP ON ERROR INSTALL R4 BETWEEN J1 AND J2. (SEE VIEW A-A)
8. FOR BINARY FORMAT REMOVE R5 FROM J5 AND J6 AND INSTALL BETWEEN J3 AND J4. (SEE VIEW A-A)

LTR	DESCRIPTION	DATE	APPD
A	400802 (B) 12-13-74 REDRAWN WITH CHANGES. UPDATE REVISION LEVEL BLOCK. CHG QTY IT. 18 WAS 1 ALSO CHG P/N IT. 21 WAS 230581-0055	1/2/75	
B	403234(C) 6-6-75 1) ADDED VIEW A-A 2) ADDED "SEE VIEW A-A" TO NOTES 7 & 8. 3) DELETED REV STATUS BLOCK & ADDED "SEE DRAWING 986410 FOR REV LEVEL" AS A LOCAL NOTE.	6/11/75	
C	CN420109 1) NOTE 5, .325 WAS .375 (2) NOTE 6, .080 WAS .040	5-28-77	

VIEW A-A
SCALE: NONE

SEE DRAWING 986410 FOR REV LEVEL

PROCESSES
1. WAVE SOLDER, F-124
2. RUBBER STAMP, F-100, HEIGHT 09, COLOR BLACK

PROJ NO	SIZE	NEXT ASSY DWG NO
8726		959389
8726		986466

LIST OF MATERIALS

TEXAS INSTRUMENTS INCORPORATED
INDUSTRIAL PRODUCTS DIVISION
HOUSTON, TEXAS

DUAL FORMAT PLAYBACK CONTROL

D 981319

LM

PART NUMBER	REV	DESCRIPTION
0981319-0001	C	DUAL FORMAT PLAYBACK CONTROL

ITEM.	QUANTITY.	COMPONENT..	DESCRIPTION	UM
0001	00001.000	0981317-0001	PWB,PLAYBACK CONTROL	EA
0002	00001.000	0533887-0003	EJECTOR,PCB,NON-LOCKING,BLACK SCA - S--02 BLACK	EA
0003	00001.000	0533887-0015	EJECTOR,PCB,NON-LOCKING,YELLOW SCA - S-202 YELLOW	EA
0004	00003.000	0972946-0072	RES FIX 2.0K OHM 5 % .25 W CARBON FILM ROH - R-25	EA
0004A			R1 R2 R3 ROH - R-25	
0005	00002.000	0972946-0017	RES FIX 10.0 OHM 5 % .25 W.CARBON FILM ROH - R-25	EA
0005A			R4 R5 ROH - R-25	
0006	00004.000	0222222-7400	NETWORK SN7400N - 3-000	EA
0006A			Z6 Z9 Z17 Z28 - 3-000	
0007	00004.000	0222222-7402	NETWORK SN7402N TI- - SN-402N	EA
0007A			Z1 Z4 Z13 Z16 TI- - SN-402N	
0008	00001.000	0222222-7403	NETWORK SN7403N	EA
0008A			Z12	
0009	00003.000	0222222-7404	NETWORK SN7404N	EA
0009A			Z2 Z5 Z19	
0010	00002.000	0222222-7410	NETWORK SN7410N - 3-000	EA
0010A			Z8 Z20 - 3-000	
0011	00001.000	0222222-7420	NETWORK SN7420N - SN-420N	EA
0011A			Z25 - SN-420N	
0012	00001.000	0222222-7425	NETWORK SN7425N	EA
0012A			Z27	
0013	00001.000	0222222-7427	NETWORK SN7427N TI- - SN-427N	EA
0013A			Z10 TI- - SN-427N	
0014	00002.000	0222222-7451	NETWORK SN7451N - SN-451N	EA
0014A			Z26 Z27 - SN-451N	
0015	00003.000	0222222-7474	NETWORK SN7474N - 3-000	EA
0015A			Z14 Z15 Z21 - 3-000	
0016	00001.000	0222222-7166	NETWORK SN74166N	EA
0016A			Z29	
0017	00003.000	0222222-7175	NETWORK SN74175N	EA
0017A			Z3 Z11 Z18	
0018	00002.000	0222222-7191	NETWORK SN74191N	EA
0018A			Z22 Z24	
0019	00001.000	0566714-0001	NETWORK-2102 MOS STATIC RAM 1024 BIT PLT MTL - MF-102P	EA
0019A			Z23 MTL - MF-102P	
0020	00006.000	0972736-0014	SOCKET,GLD SPRING,TIN EYLT-.025 PIN DIA	EA
0020A			J1 J2 J3 J4 J5 J6	
0021	00008.000	0532736-0002	CAP FIX CERAMIC .02 MF 20/80% 25 VOLT CRL - 2-DU60E203ZAC	EA
0021A			C2 THRU C9 CRL - 2-DU6CE203ZAC	
0022	00001.000	0972924-0011	CAP FIX TANT SOLID 68 MFD 10 % 15 VOLT QPL - M3-C03/1-2274	EA

PART NUMBER	REV	DESCRIPTION
0981319-0001	C	DUAL FORMAT PLAYBACK CONTROL

ITEM.	QUANTITY.	COMPONENT..	DESCRIPTION	UM
0022A			C1	
			QPL - M3-003/1-2274	
0023	00001.000	0538433-0001	COIL RF 5.60 UH .13 OHM 885 MA LT10K158	EA
			QPL - M-90542-14	
0023A			L1	
			QPL - M-90542-14	
0024	REF	0981318-9901	DIAG SCHEMATIC FOR DFPC	EA
0025	REF	0955787-9901	PROGRAM,TEST DUAL FORMAT PLAYBACK CONT	EA

NOTES: UNLESS OTHERWISE SPECIFIED

1. MASK ALL CONNECTOR FINGERS ON BOTH SIDES OF BOARD WHEN SOLDERING TO PREVENT SOLDER FROM WICKING DOWN.

2. IF C19 HAS AN OUTER FOIL MARKER BAND, ASSEMBLE C19 ONTO BOARD WITH BAND OPPOSITE +, AS SHOWN.

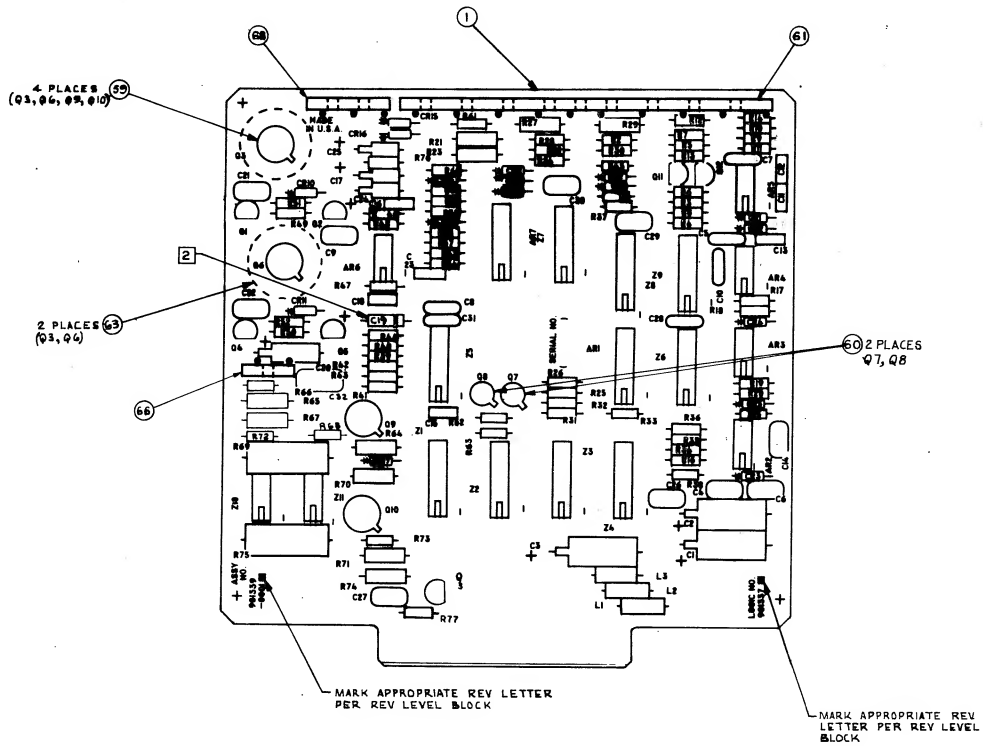

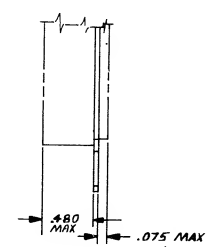

REVISIONS

ZONE	LTR	DESCRIPTION	DATE
	A	391732 (B) 4-30-75 1. IT 14 QTY WAS 3; ADDED R45 TO IT12 ADDED END VIEW.	5/6/75
		FORMAL RELEASE	
	B	392144 (B) 5-13-75 1. IT 29 WAS 230433-0500 CAP 220PF; IT 14 QTY. WAS 2; ADDED R45; IT 12 QTY WAS 2; DELETED R45.	14 MAR 75
	C	410016 (B) 11-4-75 ON LM CHANGED ITEM 4, P/N WAS 532437-0[illegible]	11/4/75
	D	410019(C) 2-7-76 ADDED PERIOD TO NOTE 1	2/7/76
	E	410019(E) 4-24-76 ON F/D: ZONE B6, REMOVED CR18. ON LM: CHANGED ITEM 40A, WAS CR3 THRU CR18. ADDED ITEM 69	5-14-76
	F	414678(B) 8/26/76 1. LM ITEM 34 WAS QTY 1 P/N 418356-2350	8/26/76
	G	CN416897 C. Eberwine (1) ITEM 5 OF LM WAS 972947-0017 "RES FIX 10 OHM 5% .5W CARBON FILM".	2/26/77
	H	CN414832 1. CHG: ITEM 22 P/N WAS 972946-0117	3/15/77
	J	CN423851 C. Eberwine 1) ZC-6 CHNG PICTORIAL OF C19 (2) ADDED NOTE 2	4/22/77
	K	CN424046 J. Pierce (1) ITEM 41 WAS QTY OF 5, 41A WAS Q1, Q4, Q7, Q8, Q15 (2) ITEM 60 WAS QTY OF 9 (3) ITEM 43 WAS PN972958-0002 (4) ADD ITEMS 70, 71 & 41B	6-23-77

PROCESSES;
1. WAVE SOLDER PER F-124 AND/OR SOLDER PER F-127
2. RUBBER STAMP, F-100, HEIGHT .09, COLOR BLACK

QTY REQD -2	QTY REQD -1	ITEM NO	CODE IDENT	PART OR IDENTIFYING NUMBER	NOMENCLATURE OR DESCRIPTION	PROCUREMENT SPECIFICATION

PARTS LIST

UNLESS OTHERWISE SPECIFIED
- REMOVE ALL BURRS AND SHARP EDGES
- CONCENTRICITY MACHINED DIAMETERS .010 F/R
- DIMENSIONAL LIMITS APPLY BEFORE FINISH PROCESSING
- IDENTIFYING NUMBERS SHOWN IN PARENTHESES FOR REFERENCE ONLY
- INTERPRET DRAWING IN ACCORDANCE WITH MIL-STD-100

HOLE TOLERANCE

.013 THRU .125	+.001 -.001	.126 THRU .250	+.005 -.001	.251 THRU .500	+.008 -.001
.501 THRU .750	+.008 -.001	.751 THRU 1.000	+.010 -.001	1.001 THRU 2.000	+.012 -.001

NEXT ASSY	USED ON
986353	8734 8726

APPLICATION

UNLESS OTHERWISE SPECIFIED
- DIMENSIONS ARE IN INCHES
- TOLERANCES ANGLES ±1° 3 PLACE DECIMALS ±.010 2 PLACE DECIMALS ±.02

MATERIAL:

DWN 3-6-5 DATE
CHK 26 FEB 75
ENGR 3/6/75
QA 3/11/75
APPD 3/11/75
CONTR NO 3/10
DESIGN ACTIVITY RELEASE 5/6/75

TEXAS INSTRUMENTS INCORPORATED
Equipment Group Dallas, Texas

CASSETTE TRANSPORT, PWB ASSEMBLY

SIZE D | CODE IDENT NO 96214 | DRAWING NO 981339

SCALE 2/1

LM

FOR REVISION LEVEL STATUS SEE DWG NO. 986410

REVISION LEVEL

PRINTED WIRING BOARD (981338-0001)
CERTIFIED DIAGRAM FOR 0081 ASSY (981337-0001)
ASSEMBLY

D 981339

PART NUMBER	REV	DESCRIPTION
0981339-0001	K	CASSETTE TRANSPORT,PWB ASSY

ITEM.	QUANTITY.	COMPONENT..	DESCRIPTION	UM
0001	00001.000	0981338-0001	PWB,CASSETTE TRANSPORT	EA
0002	00002.000	0972947-0044	RES FIX 130 OHM 5% .5 W CARBON FILM	EA
			ROH - R-50	
0002A			R64 R70	
			ROH - R-50	
0003	00004.000	0972947-0057	RES FIX 470 OHM 5% .5 W CARBON FILM	EA
			ROH - R-50	
0003A			R65 R67 R71 R74	
			ROH - R-50	
0004	00002.000	0233489-0000	RES 150.00 OHM 2. W 5.	EA
			AB - HB-515	
0004A			R69 R75	
			AB - HB-515	
0005	00002.000	0972977-0039	RES,FIXED 10 OHMS 1/2 WATT 5%	EA
			0813-9 RE-20G100JS	
0005A			R21 R23	
			0813-9 RE-20G100JS	
0006	00001.000	0972946-0045	RES FIX 150 OHM 5 % .25 W CARBON FILM	EA
			ROH - R-25	
0006A			R1	
			ROH - R-25	
0007	00002.000	0972946-0064	RES FIX 910 OHM 5% .25 W CARBON FILM	EA
			ROH - R-25	
0007A			R66 R72	
			ROH - R-25	
0008	00012.000	0972946-0065	RES FIX 1.0K OHM 5% .25 W CARBON FILM	EA
			ROH - R-25	
0008A			R38 R44 R39 R41 R54 R55 R56	
			ROH - R-25	
0008B			R58 R60 R20 R18 R77	
			ROH - R-25	
0009	00005.000	0972946-0067	RES FIX 1.2K OHM 5% .25 W CARBON FILM	EA
			ROH - R-25	
0009A			R37 R3 R5 R6 R7	
			ROH - R-25	
0010	00001.000	0972946-0072	RES FIX 2.0K OHM 5 % .25 W CARBON FILM	EA
			ROH - R-25	
0010A			R16	
			ROH - R-25	
0011	00004.000	0972946-0076	RES FIX 3.0K OHM 5 % .25 W CARBON FILM	EA
			ROH - R-25	
0011A			R2 R51 R52 R61	
			ROH - R-25	
0012	00001.000	0972946-0081	RES FIX 4.7K OHM 5 % .25 W CARBON FILM	EA
			ROH - R-25	
0012A			R15	
			ROH - R-25	
0013	00002.000	0972946-0085	RES FIX 6.8K OHM 5 % .25 W CARBON FILM	EA
			ROH - R-25	
0013A			R28 R30	
			ROH - R-25	
0014	00003.000	0972946-0089	RES FIX 10K OHM 5% .25 W CARBON FILM	EA
			ROH - R-25	
0014A			R4 R8 R45	
			ROH - R-25	
0015	00001.000	0972946-0095	RES FIX 18K OHM 5% .25 W CARBON FILM	EA
			ROH - R-25	
0015A			R46	
			ROH - R-25	
0016	00003.000	0972946-0097	RES FIX 22 K OHM 5 % .25 W CARBON FILM	EA
			ROH - R-25	
0016A			R26 R31 R35	
			ROH - R-25	
0017	00003.000	0972946-0101	RES FIX 33 K OHM 5 % .25 W CARBON FILM	EA
			ROH - R-25	
0017A			R25 R32 R34	
			ROH - R-25	
0018	00004.000	0539370-0623	RES FIX FILM 301 K OHM 1% .25 WATT	EA
			COR - N-55	
0018A			R40 R42 R47 R48	
			COR - N-55	
0019	00002.000	0972946-0105	RES FIX 47 K OHM 5 % .25 W CARBON FILM	EA
			ROH - R-25	
0019A			R17 R19	
			ROH - R-25	
0020	00001.000	0972946-0110	RES FIX 75 K OHM 5 % .25 W CARBON FILM	EA
			ROH - R-25	
0020A			R76	
			ROH - R-25	

PART NUMBER	REV	DESCRIPTION
C961339-0001	K	CASSETTE TRANSPORT,PWB ASSY

ITEM.	QUANTITY.	COMPONENT..	DESCRIPTION	UM
0021	00001.000	0972946-0116	RES FIX 130K OHM 5 % .25 W CARBON FILM	EA
			ROH - R-25	
0021A			R43	
			RCH - R-25	
0022	00002.000	0972946-0110	RES FIX 75 K OHM 5 % .25 W CARBON FILM	EA
			ROH - R-25	
0022A			R22 R24	
			ROH - R-25	
0023	00001.000	0972946-0122	RES FIX 240K OHM 5 % .25 W CARBON FILM	EA
			ROH - R-25	
0023A			R53	
			RCH - R-25	
0024	00003.000	0972946-0137	RES FIX 1.0M OHM 5 % .25 W CARBON FILM	EA
			ROH - R-25	
0024A			R33 R36 R59	
			ROH - R-25	
0025	00001.000	0972946-0141	RES FIX 1.5M OHM 5 % .25 W CARBON FILM	EA
			ROH - R-25	
0025A			R57	
			ROH - R-25	
0026	00001.000	0539370-0285	RES FIX FILM 100 OHM 1% .25 WATT	EA
			COR - N-55	
0026A			R13	
			COR - N-55	
0027	00002.000	0539370-0539	RES FIX FILM 40.2K OHM 1% .25 WATT	EA
			COR - N-55	
0027A			R11 R12	
			COR - N-55	
0028	00003.000	0539370-0481	RES FIX FILM 10.0K OHM 1% .25 WATT	EA
			COR - NA-5D-100PPM/C	
0028A			R9 R10 R14	
			COR - NA-5D-100PPM/C	
0029	00001.000	0972929-0394	CAP FIX CERAMIC 680 PF 10 % 200 V	EA
			QPL - M3-014/01-1394	
0029A			C16	
			QPL - M3-014/01-1394	
0030	00002.000	0972929-0357	CAP FIX CERAMIC .001 UF 10% 200V	EA
			QPL - M3-014/01-1397	
0030A			C12 C15	
			QPL - M3-014/01-1397	
0031	00001.000	0972965-0006	CAP FIX CERAMIC .0033 UF 10% 200V	EA
			QPL - C-06BX332K	
0031A			C14	
			QPL - C-06BX332K	
0032	00016.000	0532736-0002	CAP FIX CERAMIC .02 MF 20/80% 25 VOLT	EA
			CRL - 2-DU60F203ZAC	
0032A			C4 THRU C9 C21 C22 C26 THRU	
			CRL - 2-DU60F203ZAC	
0032B			C32 C10	
			CRL - 2-DU60E203ZAC	
0033	00001.000	0230659-0100	CAP .4700 MF 50V +OR-20%	EA
			ERI - 81-3000Z5U0474	
0033A			C13	
			ERI - 81-3000Z5U0474	
0034	00001.000	0535997-0066	CAP,FIXED .47 MFD 5% 50V	EA
			TRW - X-63UW	
0034A			C19	
			TRW - X-63UW	
0035	00002.000	0972924-0017	CAP FIX TANT SOLID 1.0 MFD 10 % 35 VOLT	EA
			SPR - 15-D105X9035A	
0035A			C17 C25	
			SPR - 15-D105X9035A	
0036	00001.000	0972924-0005	CAP FIX TANT SOLID 4.7 MFD 10 % 10 VOLT	EA
			QPL - M3-003/1-2254	
0036A			C24	
			QPL - M3-003/1-2254	
0037	00001.000	0972924-0018	CAP FIX TANT SOLID 6.8 MFD 10 % 35 VOLT	EA
			QPL - M3-003/1-2304	
0037A			C20	
			QPL - M3-003/1-2304	
0038	00003.000	0972924-0015	CAP FIX TANT SOLID 47 MFD 10 % 20 VOLT	EA
			QPL - M3-003/1-2295	
0038A			C1 C2 C3	
			QPL - M3-003/1-2295	
0039	00003.000	0538429-0001	COIL RF 5.60 UH .32 OHM 495 MA LT10K129	EA
			QPL - M-14046-01	
0039A			L1 L2 L3	
			QPL - M-14046-01	
0040	00014.000	0972932-0001	DIODE,1N9148 SWITCHING 75V P1V 75MA 4NS	EA
			TI - I-9148	

PART NUMBER	REV	DESCRIPTION
C981339-C001	K	CASSETTE TRANSPORT,PWB ASSY

ITEM.	QUANTITY.	COMPONENT..	DESCRIPTION	UM
C040A			CR3 THRU CR16	
			TI - I-914B	
0041	00002.000	0972948-0002	TRANSISTOR,2N2222A NPN GEN PURP SW TO-18	EA
			TI - 2-2222A	
0041A			Q7 Q8	
			TI - 2-2222A	
0041B			ITEM 41 MAY BE USED WITH	
			TI - 2-2907A	
0041C			ITEM 60 AS AN ALTERNATE TO	
			TI - 2-2907A	
0041D			ITEM 70	
			TI - 2-2907A	
0042	C0002.000	0972947-0035	RES FIX 82 OHM 5% .5 W CARBON FILM	EA
			ROH - R-50	
C042A			R27 R29	
			ROH - R-50	
0043	00004.000	0800523-0001	TRANSISTOR A5T2907 PNP SILICON	EA
			TI- - A5-2907	
0043A			Q2 Q5 Q11 Q12	
			TI - 2-2907A	
0044	C0004.000	0539879-0001	TRANSISTOR 2N3725A	EA
			TI - 2N-725A	
0044A			C3 C6 C9 C10	
			TI - 2N-725A	
0045	00002.000	0972946-0074	RES FIX 2.4K OHM 5 % .25 W CARBON FILM	EA
			RCH - R-25	
0045A			R45 R50	
			RCH - R-25	
0046	00002.000	0972946-0053	RES FIX 330 OHM 5 % .25 W CARBON FILM	EA
			ROH - R-25	
C046A			R62 R63	
			ROH - R-25	
0047	00002.000	0972946-0066	RES FIX 1.1K OHM 5% .25 W CARBON FILM	EA
			RCH - R-25	
0047A			R68 R73	
			ROH - R-25	
0048	00002.000	0537938-0001	INTEGRATED CIRCUIT,LOGIC GATE SN75452P	EA
			TI - SN-5452P	
0048A			Z10 Z11	
			TI - SN-5452P	
0050	00002.000	0972395-0001	NETWORK,LM324N QUAD OP AMP	EA
			- LM-24N	
0050A			AR1 AR7	
			- LM-24N	
0051	C0001.000	0222222-7437	NETWORK SN7437N	EA
0051A			Z6	
0052	C0001.000	0222222-7402	NETWORK SN7402N	EA
			TI- - SN-402N	
0052A			Z8	
			TI- - SN-402N	
0053	00001.000	0222222-7410	NETWORK SN7410N	EA
			- 3-000	
0053A			Z2	
			- 3-000	
0054	C0001.000	0222222-7404	NETWORK SN7404N	EA
0054A			Z7	
0055	C0001.000	0222222-7426	NETWORK SN7426N	EA
			- SN-426N	
0055A			Z9	
			- SN-426N	
0056	00002.000	0222222-7474	NETWORK SN7474N	EA
			- 3-000	
0056A			Z4 Z5	
			- 3-000	
0057	C0002.000	0222222-7417	NETWORK-SN7417N	EA
0057A			Z1 Z3	
0058	REF	0981337-9901	LOGIC DIAGRAM,CASSETTE TRANSPORT	EA
0059	00004.000	0232583-0001	PAD XST MTG TO-5 WHT	EA
			THR - 77-7-4N	
0060	C0002.000	0185113-0001	X SPACER XST TO-18 CASE	EA
			* - -	
0061	00001.000	0772696-0002	HEADER,36PIN 3.600LG SGL ROW,STRIP OF 36	EA
			0225-6 65-74-2	

PART NUMBER	REV	DESCRIPTION
0981339-0001	K	CASSETTE TRANSPORT,PWB ASSY

ITEM.	QUANTITY.	COMPONENT..	DESCRIPTION	UM
0062	00005.000	0222224-3011	NETWORK LM301AN OPERATIONAL AMP	EA
0062A			- LM-01AN AR2 AR3 AR4 AR5 AR6	
0063	00002.000	0419253-0003	- LM-01AN HEATSINK,TRANSISTOR	EA
0064	00002.000	0972929-0370	WAK - 2-5 CAP FIX CERAMIC 33.0 PF 10 % 200 V	EA
0064A			QPL - M3-014/01-1370 C11 C18	
0065	00002.000	0972934-0007	QPL - M3-014/01-1370 DIODE,1N752A 5.6 V 5% SIL VOLT REG	EA
0065A			QPL - 1-752A CR1 CR2	
0066	00001.000	0772696-0012	QPL - 1-752A HEADER,5 PIN .500LG SGL ROW,STRIP OF 5	EA
0067	00001.000	0972965-0024	- SE- DWG CAP FIX CERAMIC .100 MF 10% 100V	EA
0067A			QPL - C-068X104K C23	
0068	00001.000	0772696-0015	QPL - C-068X104K HEADER,8 PIN .800LG SGL ROW,STRIP OF 8	EA
0069	00001.000	0539468-0002	- SE- DWG DIODE,1N4002 1AMP 100PIV RECTIFIER	EA
0069A			TI - I-4002 CR17	
0070	00003.000	0972057-0001	TI - I-4002 TRANSISTOR-A5T2222 NPN SILICON	EA
0070A			TI- - A5-2222 Q1,Q4,Q13	
0071	00000.000	0972958-0002	TI- - A5-2222 TRANSISTOR,2N2907A PNP GEN PURP SW TO-18	EA
0071A			TI - 2-2907A MAY BE USED WITH ITEM 60 AS	
0071B			TI - 2-2907A AN ALTERNATE TO ITEM 43	
			TI - 2-2907A	

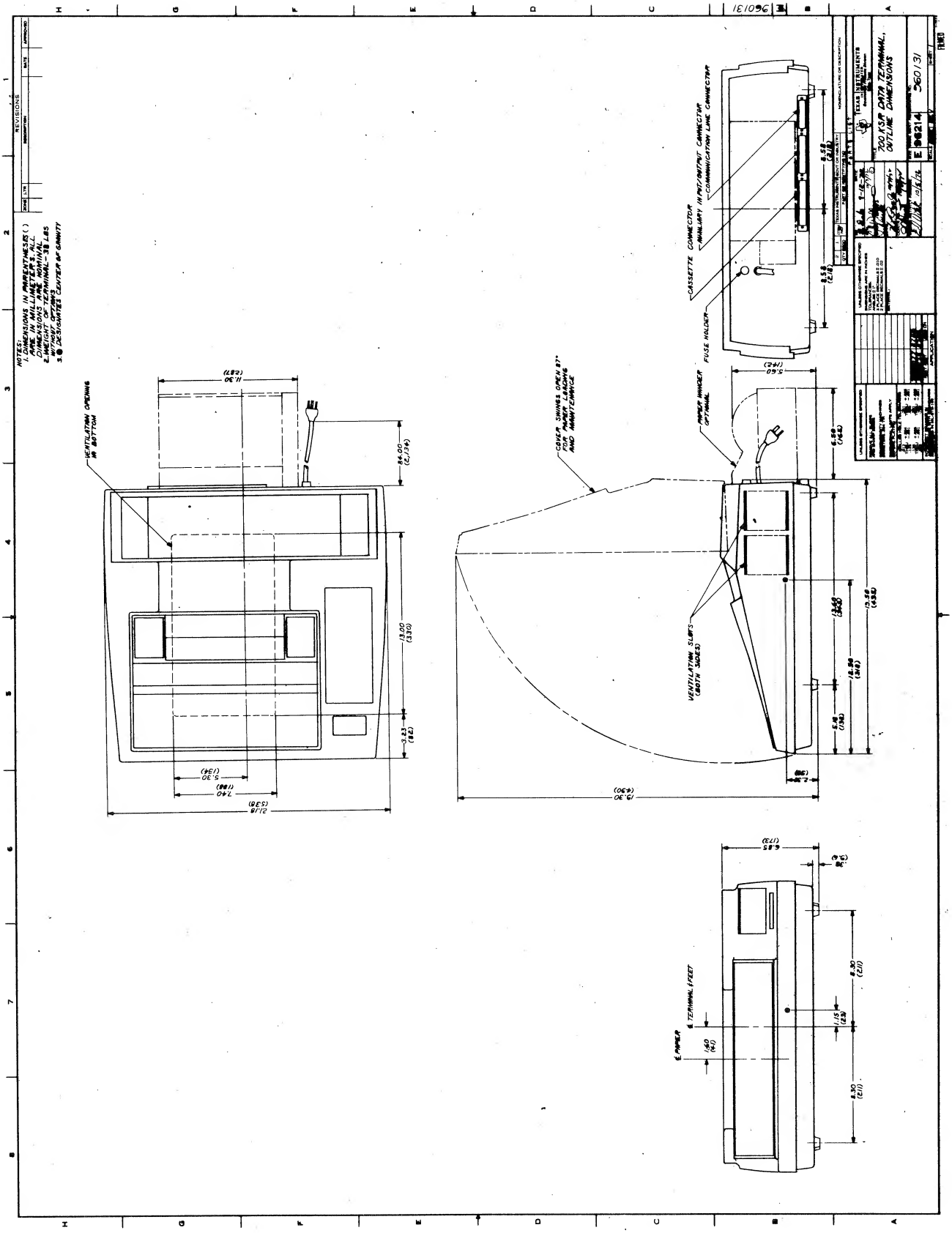
NOTES:
1. DIMENSIONS IN PARENTHESES ( ) ARE IN MILLIMETERS. ALL OTHER DIMENSIONS ARE IN INCHES.
2. WEIGHT OF TERMINAL 18 LBS WITHOUT OPTIONS.
3. DESIGNATES CENTER OF GRAVITY
REVISIONS
700 ISP DATA TERMINAL, OUTLINE DIMENSIONS
E 96214
960131
CASSETTE CONNECTOR
AUXILIARY IN/OUT/INPUT CONNECTOR
COMMUNICATION LINE CONNECTOR
FUSE HOLDER
PAPER HANGER OPTIONAL
COVER SWINGS OPEN 87° FOR PAPER LOADING AND MAINTENANCE
VENTILATION SLOTS (BOTH SIDES)
VENTILATION OPENING IN BOTTOM
E TERMINAL FEET
E PAPER

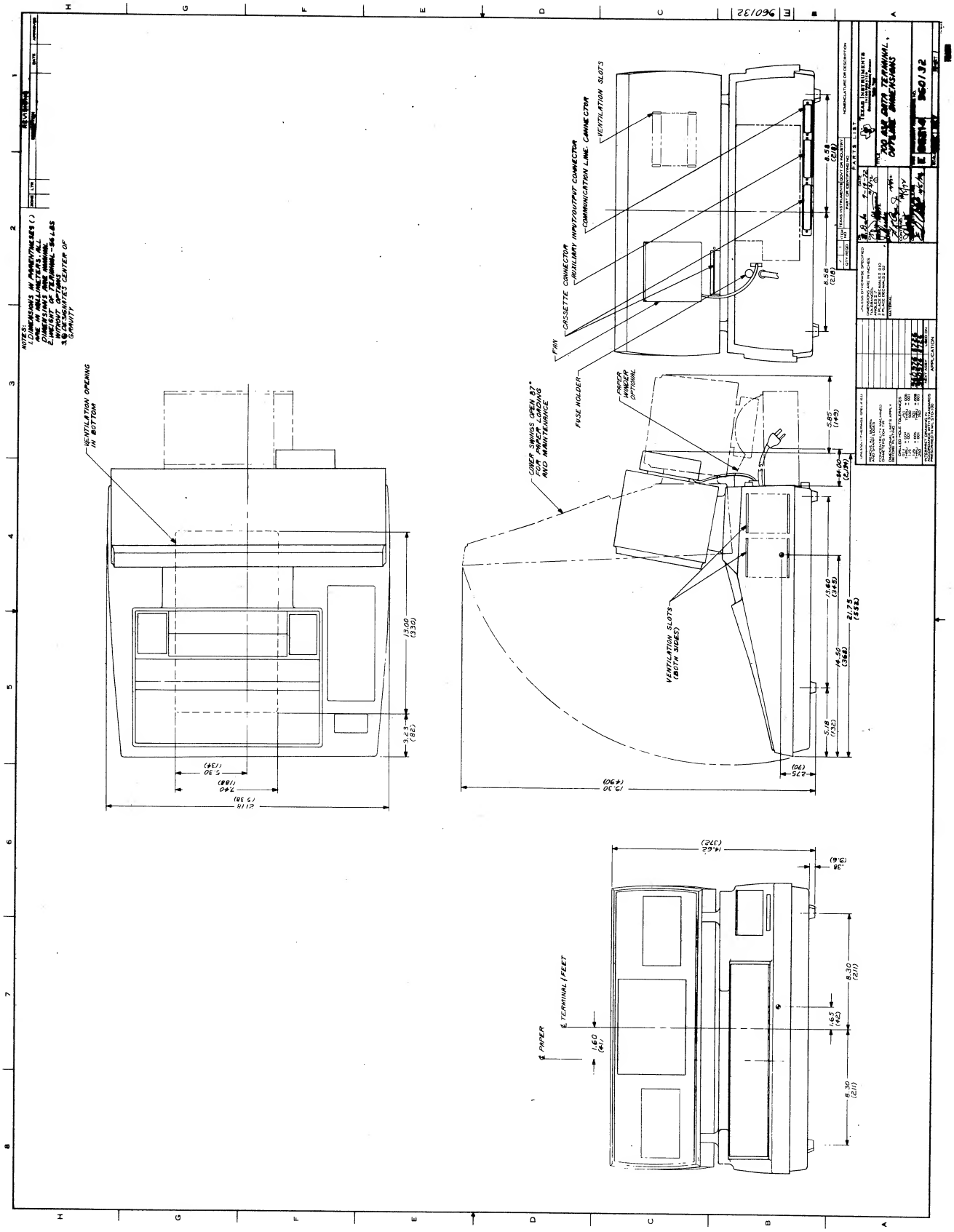
NOTES:
1. DIMENSIONS IN PARENTHESES ( ) ARE IN MILLIMETERS. ALL DIMENSIONS ARE NOMINAL
2. WEIGHT OF TERMINAL - 56 LBS WITHOUT OPTIONS
3. DESIGNATES CENTER OF GRAVITY
VENTILATION OPENING IN BOTTOM
COVER SWINGS OPEN 87° FOR PAPER LOADING AND MAINTENANCE
VENTILATION SLOTS (BOTH SIDES)
FUSE HOLDER
PAPER WINDER OPTIONAL
FAN
CASSETTE CONNECTOR
AUXILIARY INPUT/OUTPUT CONNECTOR
COMMUNICATION LINE CONNECTOR
VENTILATION SLOTS
℄ TERMINAL / FEET
℄ PAPER
700 ASR DATA TERMINAL, OUTLINE DIMENSIONS
TEXAS INSTRUMENTS
960132

APPENDIX C

ELECTRICAL SCHEMATICS AND LOGIC DIAGRAMS

This Appendix contains electrical schematics and PC card logic diagrams to aid data terminal maintenance and troubleshooting. The drawings are arranged in numerical order as follows:

Title	TI Drawing Number	Page
*Printer Control	959175P	C-1
Answer-Back Memory	959176C	C-2
*ASCII Transmit/Receive	959177K	C-3
Printer Code	959178N(2)	C-4, C-5
Printhead Interface	959180B	C-6
*Regulator/Amplifier (10A)	959181K	C-7
*Control/Regulator (10A)	959182N	C-8
*ASR Terminal Control	959183K	C-9
Power Module Motherboard	959188G (2)	C-10, C-11
ASR Module Motherboard	959189A	C-12
Printhead	959190	C-13
TTY Interface, Polar	959191D	C-14
TTY Interface, Neutral	959192D	C-15
KSR Terminal Control	959193E	C-16
Display	959194F	C-17
Modem, ATL	959195B (2)	C-18, C-19
Baudot Transmit/Receive	959197J	C-20
AC Power Assembly	959200E	C-21
Remote Cassette Control	959201E	C-22
Record Buffer Control	959202C	C-23
*Playback Control	959203C	C-24
*Motion Control	959204G	C-25
*Tape Cassette Transport	960082T	C-26
Record Control	962295D	C-27
Tape Read/Write Controller	962296C	C-28
*Auto Device Control	962297A	C-29
Drive Mechanism	962299F (2)	C-30, C-31
Modem, ATL	962300C (2)	C-32, C-33
Modem, ATH	962301C (2)	C-34, C-35
Dual Format Record Buffer	962302H	C-36
*1200-Baud Receiver	962303C	C-37
1200-Baud Transmitter	962304D	C-38
Auto Answer Control	962307C	C-39
Option Panel Display	962308A	C-40
Paper Winder	962353	C-41
TTY Interface, Computer	966657A	C-42
Dual Format Tape Read/Write Control	969480D	C-43
*Dual Format Playback Control	969481D	C-44
*Dual Format ASCII Transmit/Receive	969482B	C-45
Acoustic Coupler	969502D(2)	C-46, C-47
Regulator/Amplifier (14A)	971444E	C-48
Control Regulator (14A)	971451L	C-49
*Remote Device Control	971495 (2)	C-50, C-51
Auto Device Control	971498B	C-52

*Obsolete

Title	TI Drawing Number	Page
Remote Device Control (Multilayer)	971499D (2)	C-53, C-54
Auto Search Control (Multilayer)	971500B	C-55
Auto Search Control (Multiwire)	971503A	C-56
Remote Device Control (Multiwire)	971504B (2)	C-57, C-58
1200 Dual Format Transmit/Receive	971509E	C-59
ASR Footpedal	973865	C-60
1200-Baud Receiver	973931B	C-61
Terminal Control	981309A	C-62
Printer Control	981312C	C-63
Motion Control	981316B	C-64
Dual Format Playback Control	981318A	C-65
Cassette Transport	981337H	C-66
*Cassette Transport (LED)	986357B	C-67

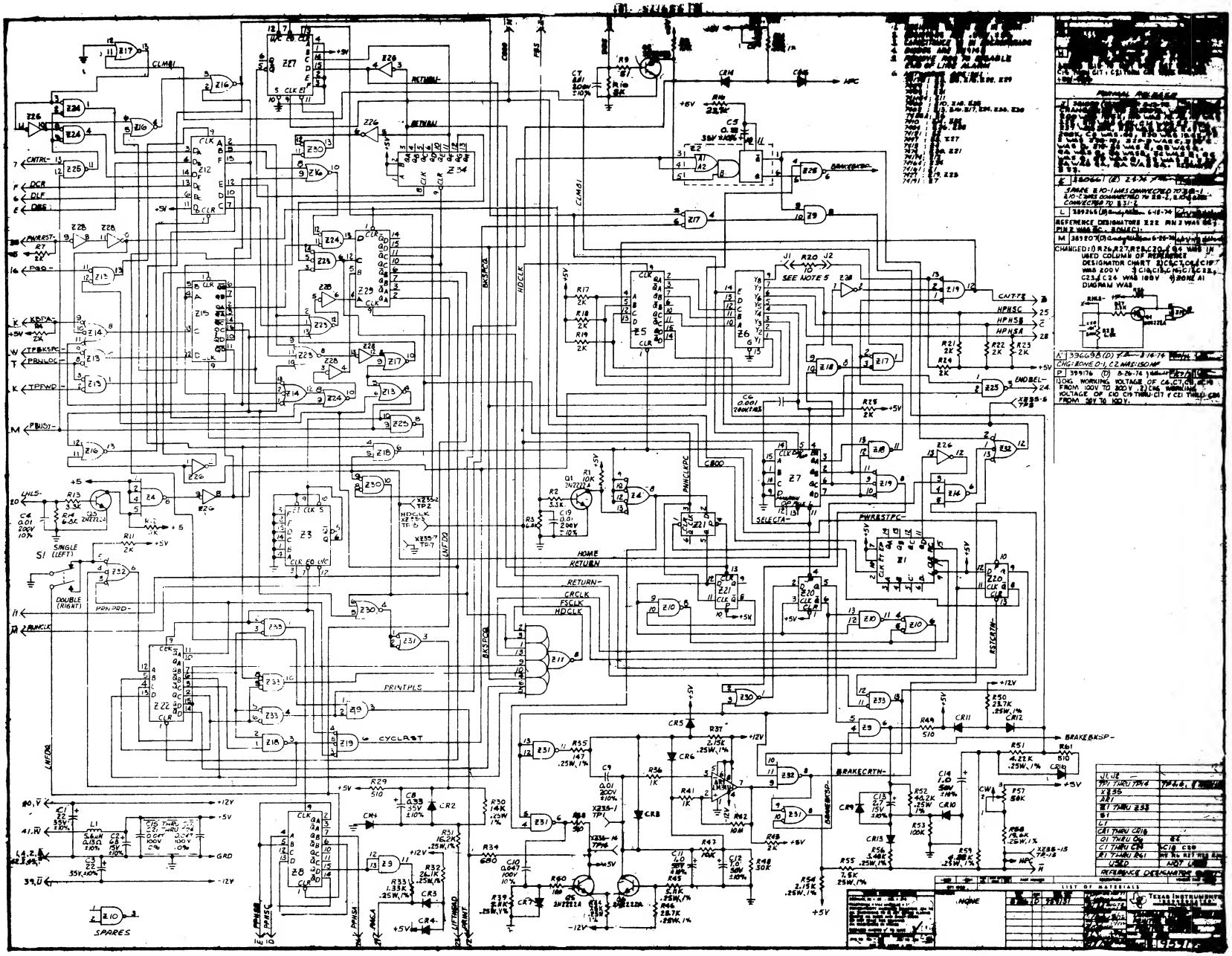

959175

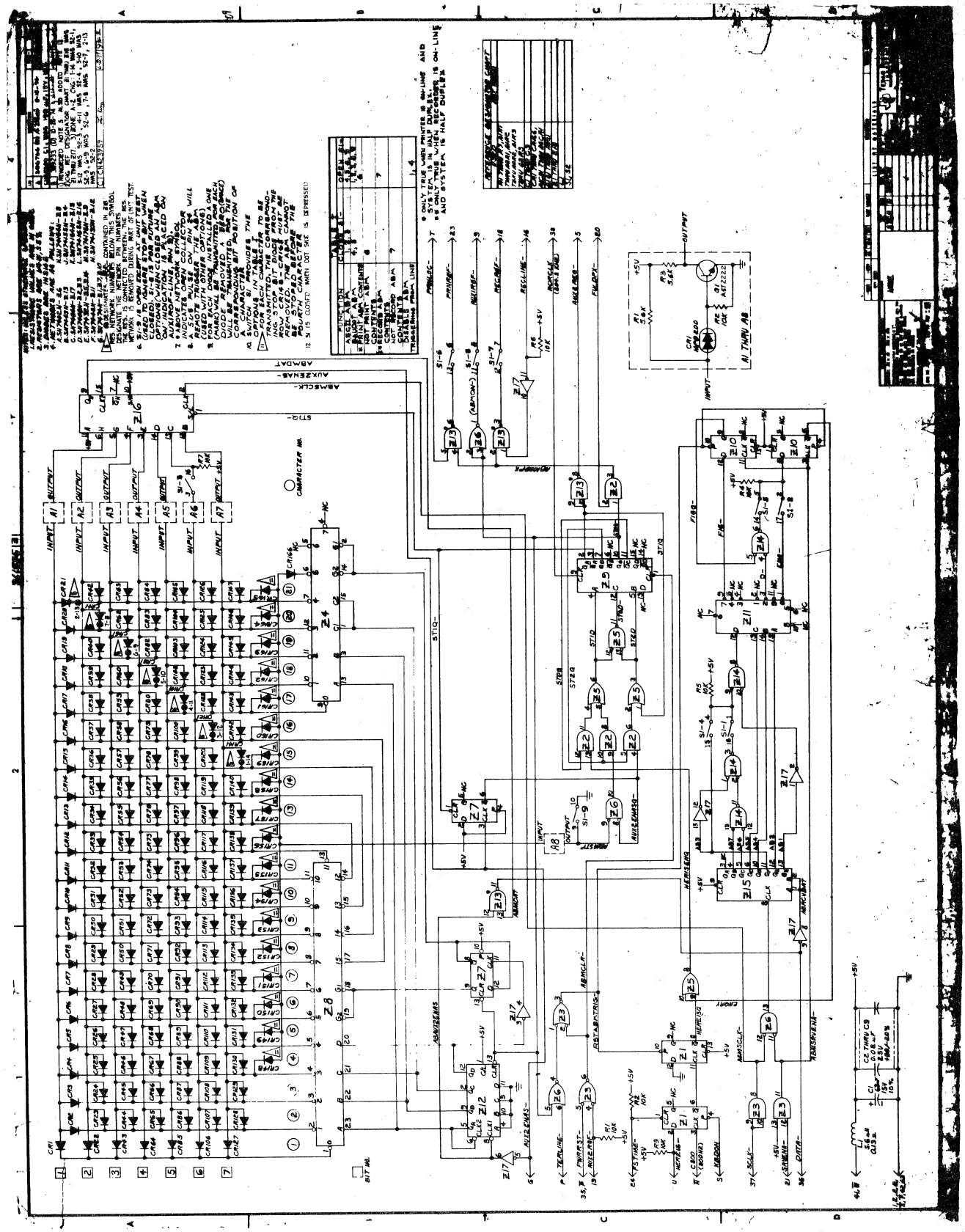

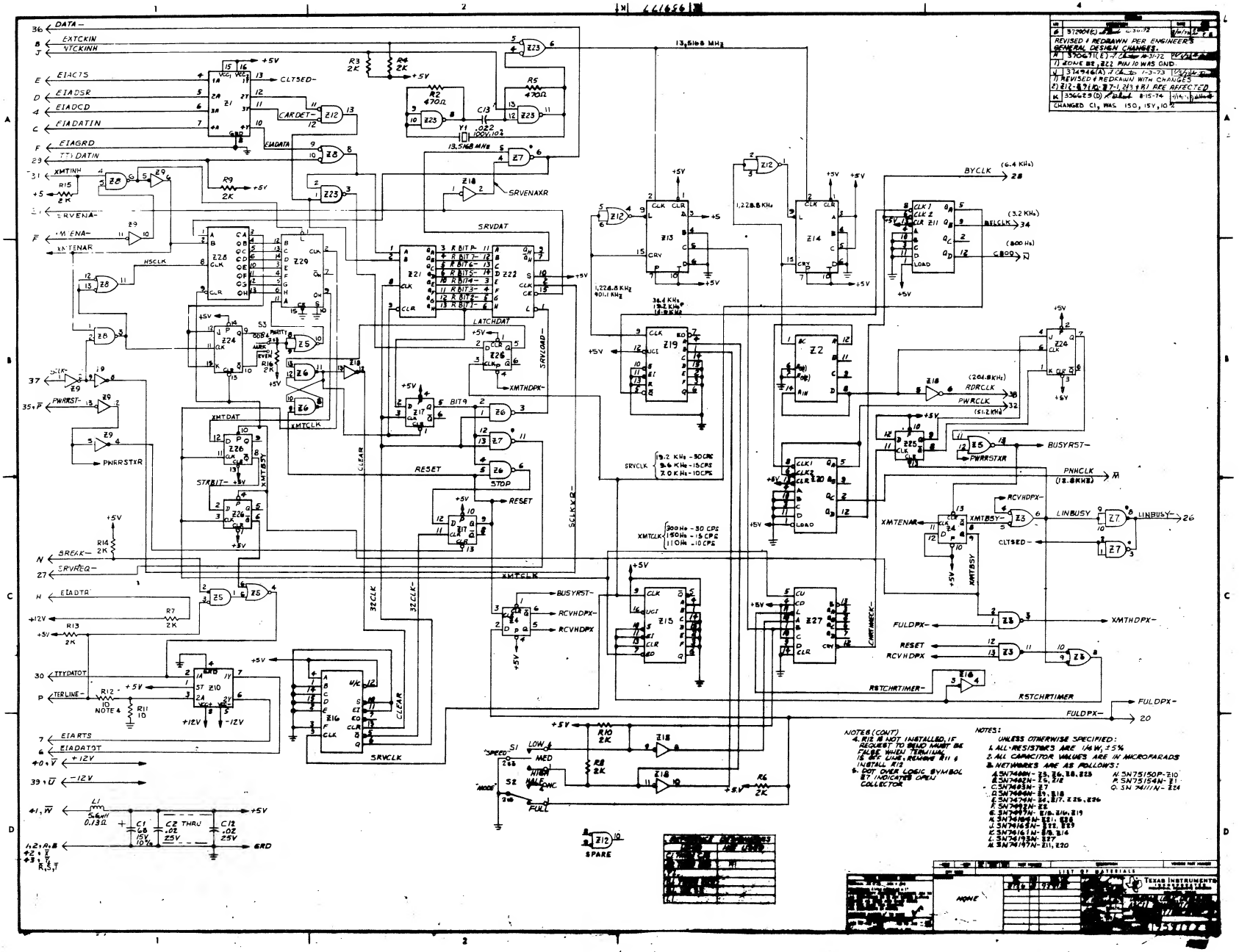
DATA-
EXTCKIN
NTCKINH
EIACTS
EIADSR
EIADCD
EIADATIN
EIAGRD
TTYDATIN
XMTINH
SRVENA-
XMTENA-
XMTENAR
HSCLK
SCLK-
PWRRST-
PWRRSTXR
BREAK-
SRVREQ-
EIADTR
TTYDATOT
TERLINE-
EIARTS
EIADATOT
+12V
-12V
GRD
CLTSED-
CARDET-
EIADATA
SRVENAXR
SRVDAT
LATCHDAT
SRVLOAD-
XMTHDPX-
XMTCLK
CLEAR
RESET
STOP
BIT9
XMTDAT
STRBIT-
XMTBSY
SCLKXR-
32CLK
SRVCLK
13.5168 MHz
13.5168 MHz
1,228.8 KHz
BYCLK (6.4 KHz)
BITCLK (3.2 KHz)
CLOCK (800 Hz)
RDRCLK (204.8KHz)
PWRCLK (51.2KHz)
PNHCLK (12.8KHz)
BUSYRST-
RCVHDPX-
LINBUSY
LINBUSY-
FULDPX-
RSTCHRTIMER-
SRVCLK
300 Hz - 30 CPS
150 Hz - 15 CPS
110 Hz - 10 CPS
9.2 KHz - 900 CPS
5.6 KHz - 150 CPS
2.0 KHz - 100 CPS
SPEED
LOW
MED
HIGH
MODE
HALF DUPLEX
FULL
SPARE
NOTES:
UNLESS OTHERWISE SPECIFIED:
1. ALL RESISTORS ARE 1/4 W, ±5%
2. ALL CAPACITOR VALUES ARE IN MICROFARADS
3. NETWORKS ARE AS FOLLOWS:
A SN7400N - Z3, Z6, Z8, Z25
B SN7402N - Z9, Z12
C SN7403N - Z7
D SN7404N - Z9, Z18
E SN7474N - Z4, Z17, Z26, Z26
F SN7493N - Z28
G SN7499N - Z15, Z16, Z19
H SN74188N - Z31, Z36
J SN74165N - Z22, Z29
K SN74161N - Z13, Z14
L SN74193N - Z27
M SN74197N - Z11, Z20
N SN75150P - Z10
P SN75154N - Z1
Q SN74111N - Z24
NOTES (CONT)
4. R12 IS NOT INSTALLED, IF REQUEST TO SEND MUST BE FALSE WHEN TERMINAL IS OFF LINE, REMOVE Z11 & INSTALL R12
5. DOT OVER LOGIC SYMBOL AT /INDICATES OPEN COLLECTOR
REVISED & REDRAWN PER ENGINEER'S GENERAL DESIGN CHANGES.
1) ZONE B2, Z22 PIN 10 WAS GND.
1) REVISED & REDRAWN WITH CHANGES
2) Z12 - 8, Z10 - 3, 7-11, Z13 & R1 ARE AFFECTED
CHANGED C1, WAS 150, 15V, 10%
NONE
LIST OF MATERIALS
TEXAS INSTRUMENTS

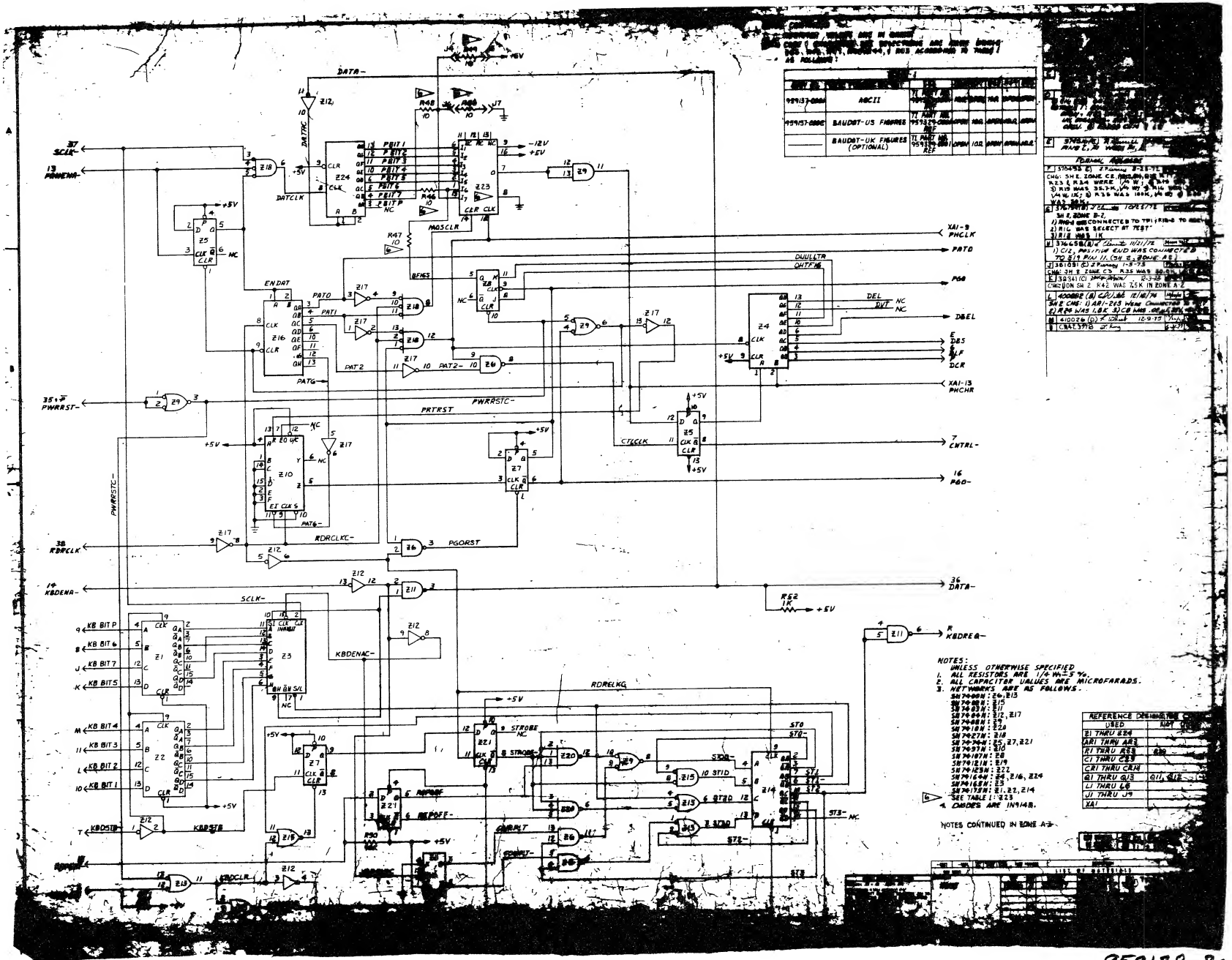

C4

959178 Rev. N

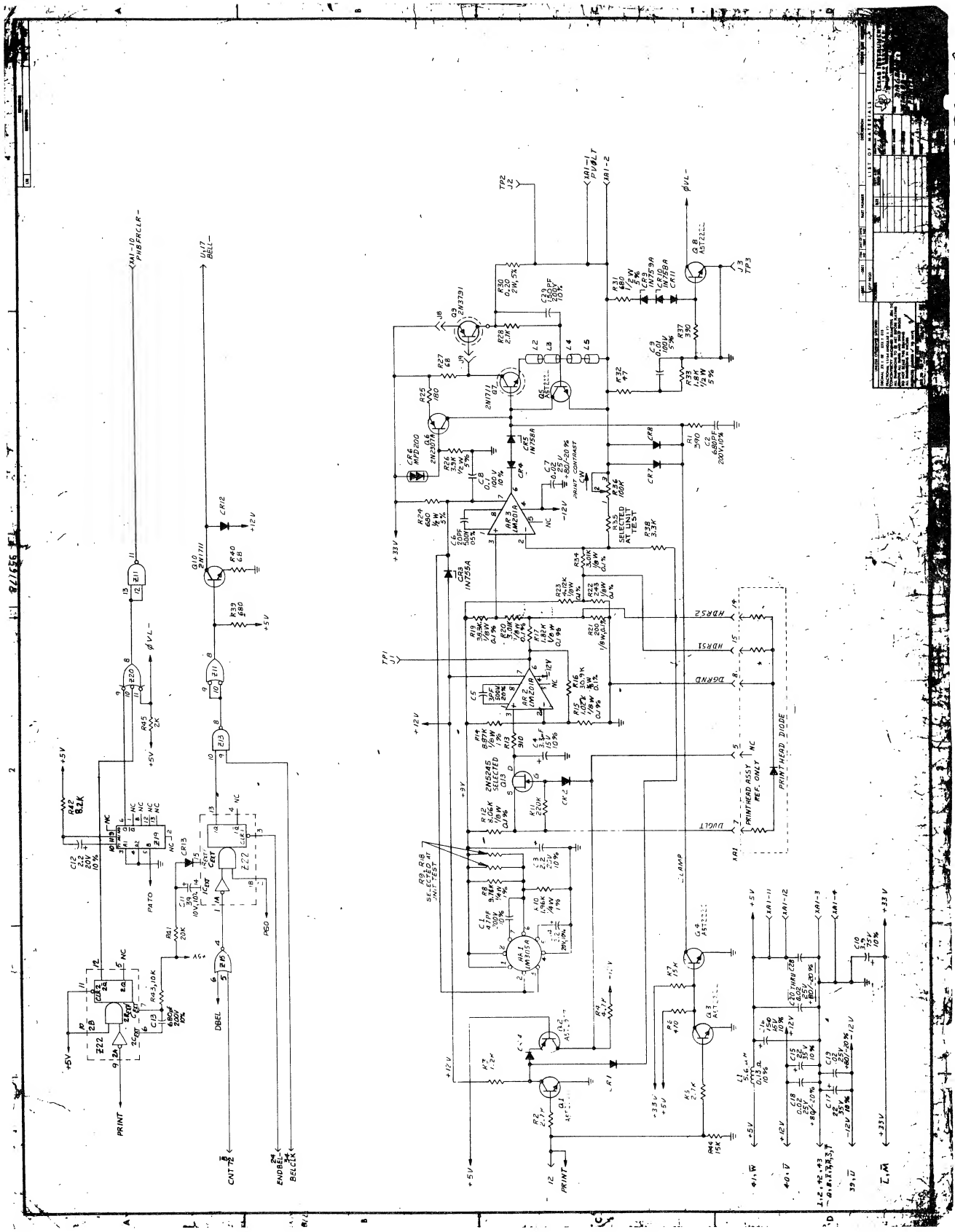

959178

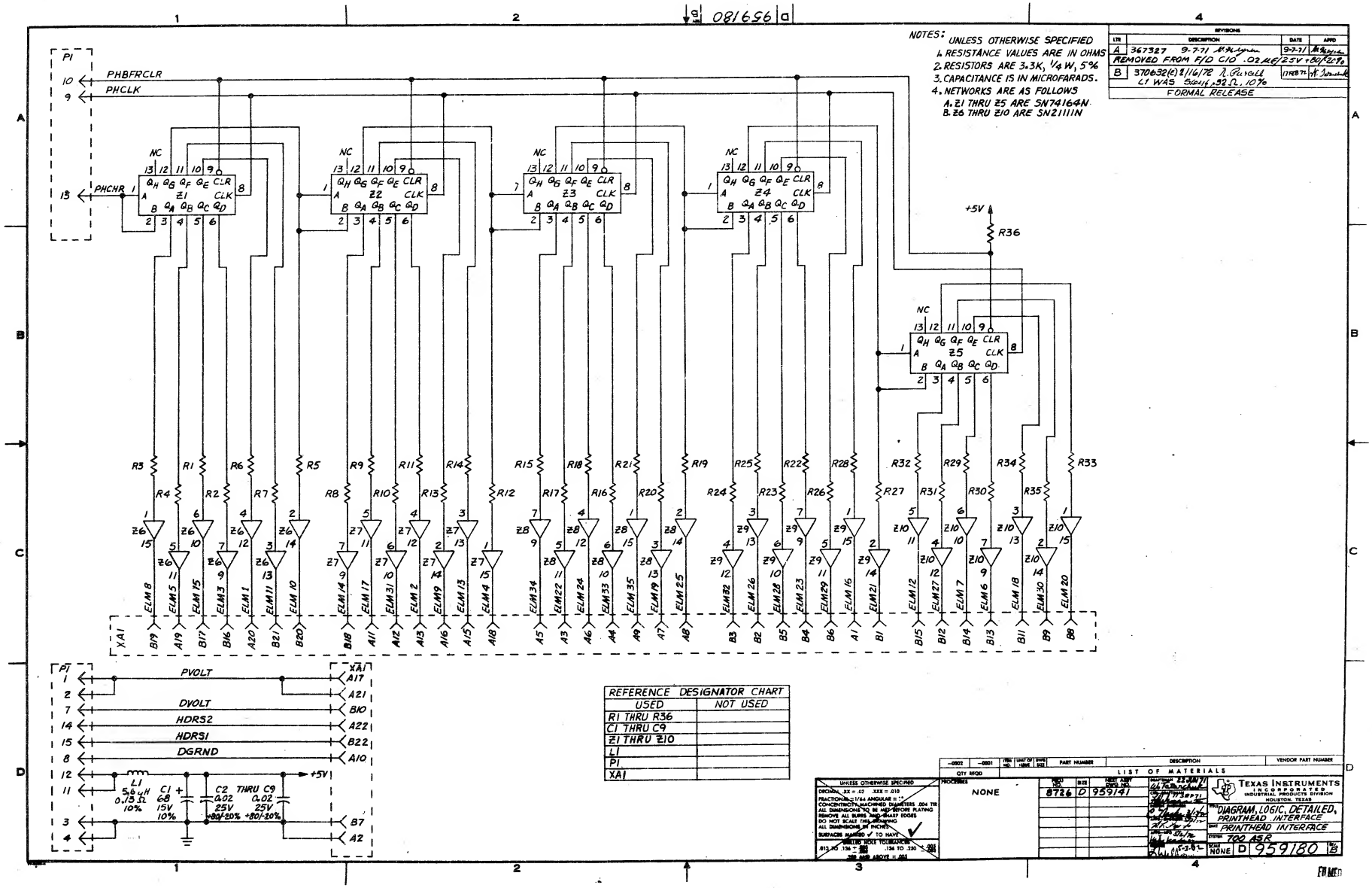
NOTES: UNLESS OTHERWISE SPECIFIED
1. RESISTANCE VALUES ARE IN OHMS
2. RESISTORS ARE 3.3K, 1/4 W, 5%
3. CAPACITANCE IS IN MICROFARADS.
4. NETWORKS ARE AS FOLLOWS
A. Z1 THRU Z5 ARE SN74164N
B. Z6 THRU Z10 ARE SN21111N
REVISIONS
A 367327 9-7-71 9-7-71
REMOVED FROM F/O C10 .02 μF/25V +80/-20%
B 370632(E) 2/16/72 L1 WAS Sleeve, 32 Ω, 10%
FORMAL RELEASE
PHBFRCLR
PHCLK
PHCHR
PVOLT
DVOLT
HDRS2
HDRS1
DGRND
+5V
R36
L1 5.6 μH 0.13 Ω 10%
C1 68 15V 10%
C2 THRU C9 0.02 25V +80/-20%
REFERENCE DESIGNATOR CHART
USED
NOT USED
R1 THRU R36
C1 THRU C9
Z1 THRU Z10
L1
P1
XA1
LIST OF MATERIALS
PART NUMBER
DESCRIPTION
VENDOR PART NUMBER
QTY REQD
PROCESSES
NONE
8726 D 959141
TEXAS INSTRUMENTS INCORPORATED INDUSTRIAL PRODUCTS DIVISION HOUSTON, TEXAS
DIAGRAM, LOGIC, DETAILED, PRINTHEAD INTERFACE
PRINTHEAD INTERFACE
700 ASR
NONE D 959180 B

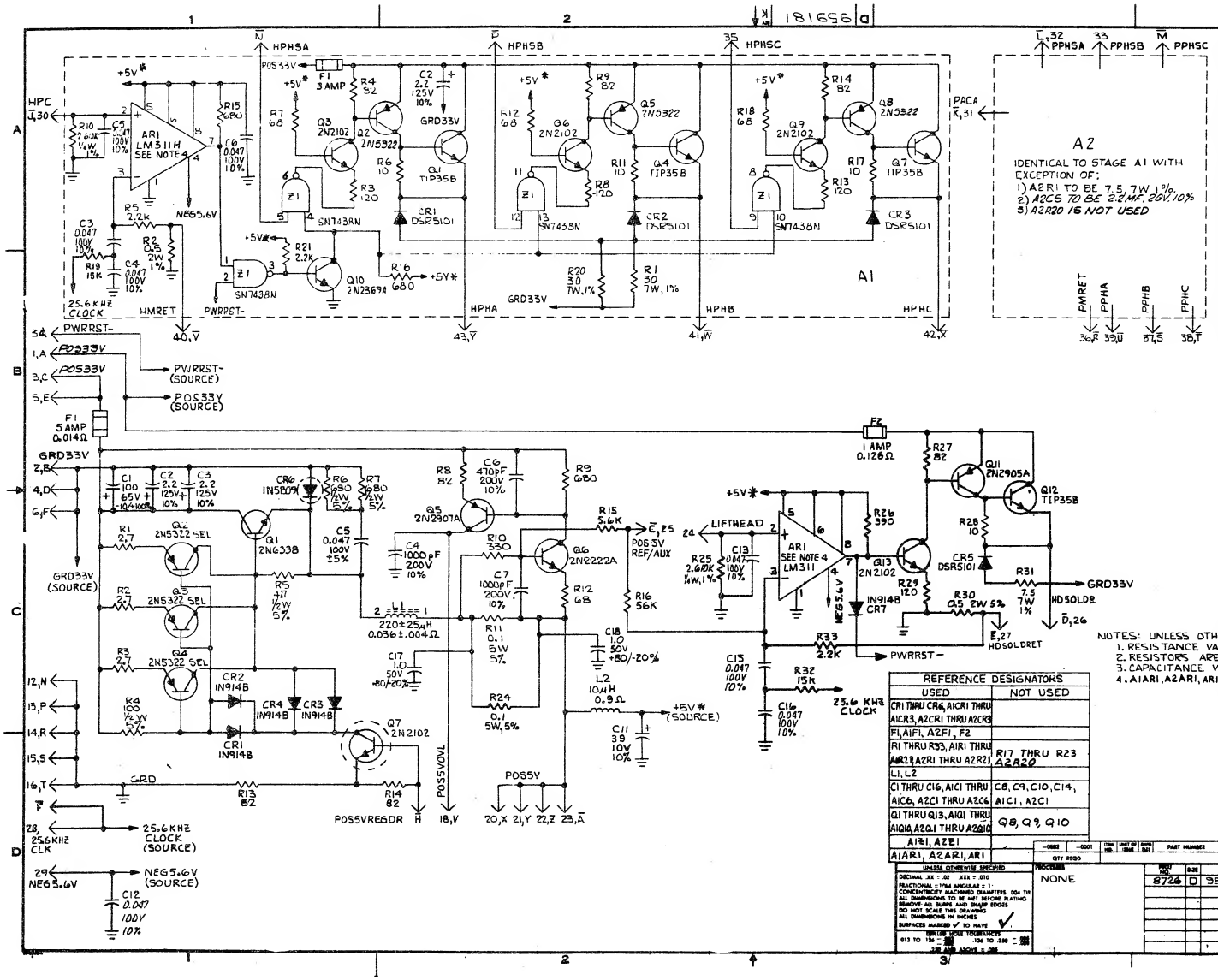

REVISIONS			
LTR	DESCRIPTION	DATE	APPD
A	364525 W Tatarchuk 9-21-71	4NOV71	

DELETED:
(1) CROWBAR & +5 REG ENABLE CKT FROM ZONE C-3.
(2) A1C1 & A2C1, 47μF, 35V, 10% BETWEEN CATHODES OF A1 & A2CR1 & GRD33V.
CHANGED:
(1) A1C5 & A2C5 WERE 4700PF 200V 10%.
(2) A1F1 & A2F1 WERE 0.5 AMP 26Ω. (3) Q1 WAS TDR60-10.
ADDED:
(1) R24. (2) LIFTHEAD CKT ZONE C-3.

B	367302 (C) W. Tatarchuk 10-23-71	4NOV71	

CHANGED:
(1) C1 WAS 120 F 50V (2) C2, C3, A1C2, A2C2 WERE 2.2μF, 100V, 10% (3) Q7, Q13, A1Q3, A1Q6, A1Q9, A2Q3, A2Q6, A2Q9 WERE 2N1711 (4) R23, A1R10, A2R10 WERE 2.7K, .25W, 5% (5) R31, A1R1, A2R1 WERE 7.5Ω, .5W, 5% (6) Q12, A1Q1, A1Q4, A1Q7, A2Q1, A2Q4, A2Q7 WERE MJE3055 (7) F2 WAS 0.5 AMP, 26Ω (8) A1F1, A2F1 WERE 2 AMP, 55Ω (9) A1R2, A2R2 WERE 0.5Ω, 2W, 5% (10) L1 WAS 480μH, 7.5 AMP

C	367322 (C) R. [illegible] 12-1-71	[illegible]	

1) C5 WAS .047μF, 100V 10%. 2) R25, A1R10, A2R10 WAS 2140Ω 1/8W, 1%. 3.) A1R1, A2R1, R31 WAS 6.0Ω 4) A1Q2, A1Q5, A1Q8 WAS 2N2905A 5.) A1F1, A2F1 WAS 3 AMP 0.035Ω. 6.) F2 WAS 1 AMP 0.125Ω.

D	370771 (B) [illegible] 2-23-71	2-25-72	

1). IN STAGE A2 - ADDED EXCEPTION 2; A2C5 WAS .05MF 12V 20%

E	370777 (E) T. [illegible] 3-7-72	[illegible]	

1) C5 WAS 0.047μF, 200V 5%. 2) C12, C13, C15, C16, A1C3 THRU A1C6, A2C3, A2C4, A2C6 WERE .05μF, 12V, 20%. 3) A1R1 WAS 15Ω, 7W, 1%. 4) ADDED A1R20. 5) A1Q2, A1Q5, A1Q8 WERE 2N5333. 6) PINS 14A WERE CONN TO 3C, 5 & 6.

F	373296 (B) [illegible] 3-7-72	7MAR72	

1) A1F1, A2F1 WERE 2 AMP
2. A2Q2, A2Q5, & A2Q8 WERE 2N2905A

G	374519 (E) T. [illegible] 8/30/72		

A1R7, A2R7, A1R12, A2R12, A1R18, A2R18 WERE 470Ω. ADDED A1Q10, A2Q10, A1R21, A2R21. A1Z1-6 & A2Z1-6 WERE CONNECTED TO A1R7, A2R7 & BASES OF A1Q3 & A2Q3 RESP. A1Z1-11 & A2Z1-11 WERE CONNECTED TO A1R12, A2R12, & BASES OF A1Q6 & A2Q6 RESP. A1Z1-8 & A2Z1-8 WERE CONNECTED TO A1R18, A2R18 & BASES OF A1Q9 & A2Q9 RESP. SIGNATURE PWRRST- WAS MOTDRENA.

FORMAL RELEASE

H	379701 (C) C. J. [illegible] 4-21-73	[illegible]	

Q1 WAS A PTD9908, AND ADDED CR6

REVISIONS CONT

NOTES: UNLESS OTHERWISE SPECIFIED
1. RESISTANCE VALUES ARE IN OHMS
2. RESISTORS ARE 1/4W ±5%
3. CAPACITANCE VALUES ARE IN MICROFARADS
4. A1AR1, A2AR1, AR1 : PIN 4 IS CONN TO CASE

J	381350 (C) B. J. [illegible] 8-14-73	8-15-73	

1) ZONE C-1 Q2, Q3 & Q4 WAS 2N2905A 2) ZONE C-1 R4 WAS 33Ω

K	386881 (B) 2-26-74	[illegible]	

C-3 1) R-26 WAS 680Ω 2) ADDED
C-2 CR7 AND PWRRST 3) ADDED C17 AND GND ALSO C18 AND GND

REFERENCE DESIGNATORS

USED	NOT USED
CR1 THRU CR6, A1CR1 THRU A1CR3, A2CR1 THRU A2CR3	
F1, A1F1, A2F1, F2	
R1 THRU R33, A1R1 THRU A1R21, A2R1 THRU A2R21	R17 THRU R23 A2R20
L1, L2	
C1 THRU C16, A1C1 THRU A1C6, A2C1 THRU A2C6	C8, C9, C10, C14, A1C1, A2C1
Q1 THRU Q13, A1Q1 THRU A1Q10, A2Q1 THRU A2Q10	Q8, Q9, Q10
A1Z1, A2Z1	
A1AR1, A2AR1, AR1	

LIST OF MATERIALS

QTY REQD	PART NUMBER	DESCRIPTION	VENDOR PART NUMBER
NONE			

UNLESS OTHERWISE SPECIFIED
DECIMAL .XX ± .02 .XXX ± .010
FRACTIONAL ± 1/64 ANGULAR ± 1°
CONCENTRICITY MACHINED DIAMETERS .004 TIR
ALL DIMENSIONS TO BE MET BEFORE PLATING
REMOVE ALL BURRS AND SHARP EDGES
DO NOT SCALE THIS DRAWING
ALL DIMENSIONS IN INCHES
SURFACES MARKED ✓ TO HAVE ✓
SHOULDER HOLE TOLERANCES
.013 TO .136 ± .003 .136 TO .250 ± .005
.250 AND ABOVE ± .005

PROCESSES			
NONE	8726	D	959143

TEXAS INSTRUMENTS INCORPORATED INDUSTRIAL PRODUCTS DIVISION HOUSTON, TEXAS

TITLE: DIAGRAM, LOGIC, DETAILED, REGULATOR/AMPLIFIER
REG/AMP
700 ASR
SCALE NONE D 959181

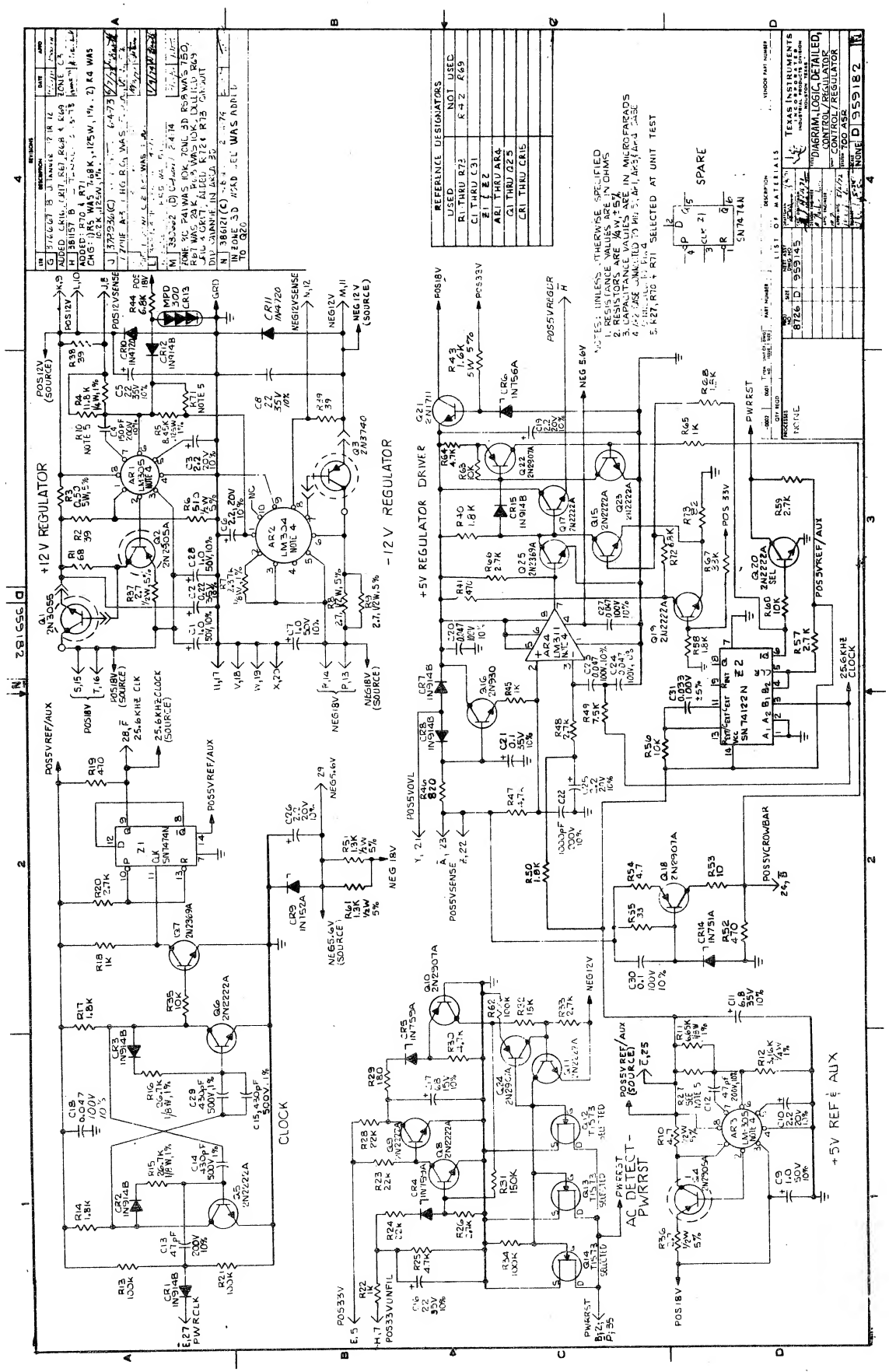
+12 V REGULATOR
-12 V REGULATOR
+5V REGULATOR DRIVER
CLOCK
AC DETECT-PWRRST
+5V REF & AUX
SPARE
REFERENCE DESIGNATORS
NOTES: UNLESS OTHERWISE SPECIFIED
1. RESISTANCE VALUES ARE IN OHMS
2. RESISTORS ARE 1/4W, ±5%
3. CAPACITANCE VALUES ARE IN MICROFARADS
4. A2 CASE CONNECTED TO PIN 5, A1, A3 & A4 CASE
5. R27, R70 & R71 SELECTED AT UNIT TEST
TEXAS INSTRUMENTS
INCORPORATED
INDUSTRIAL PRODUCTS DIVISION
HOUSTON, TEXAS
DIAGRAM, LOGIC, DETAILED, CONTROL/REGULATOR
CONTROL/REGULATOR
700 ASR
NONE
D 959182

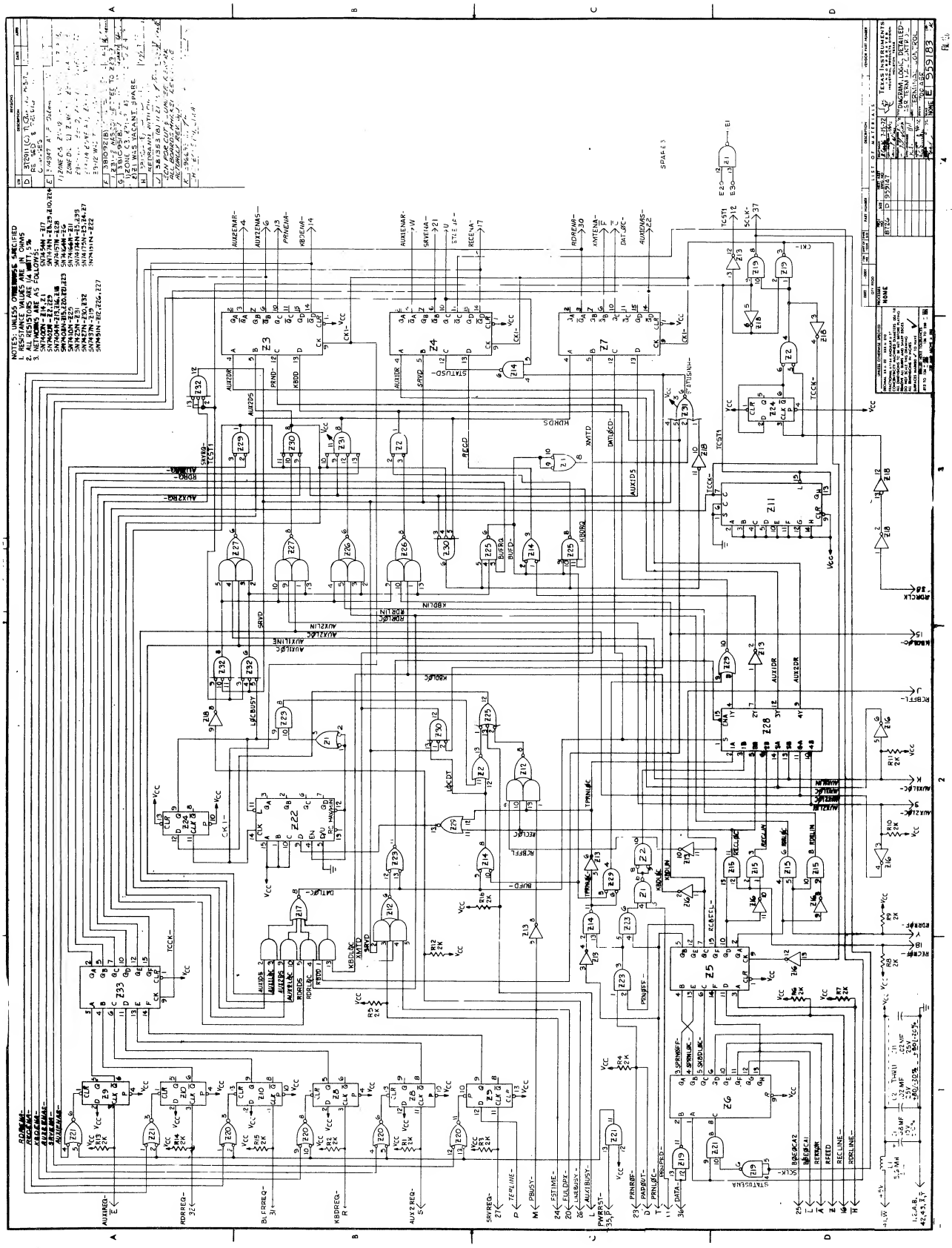

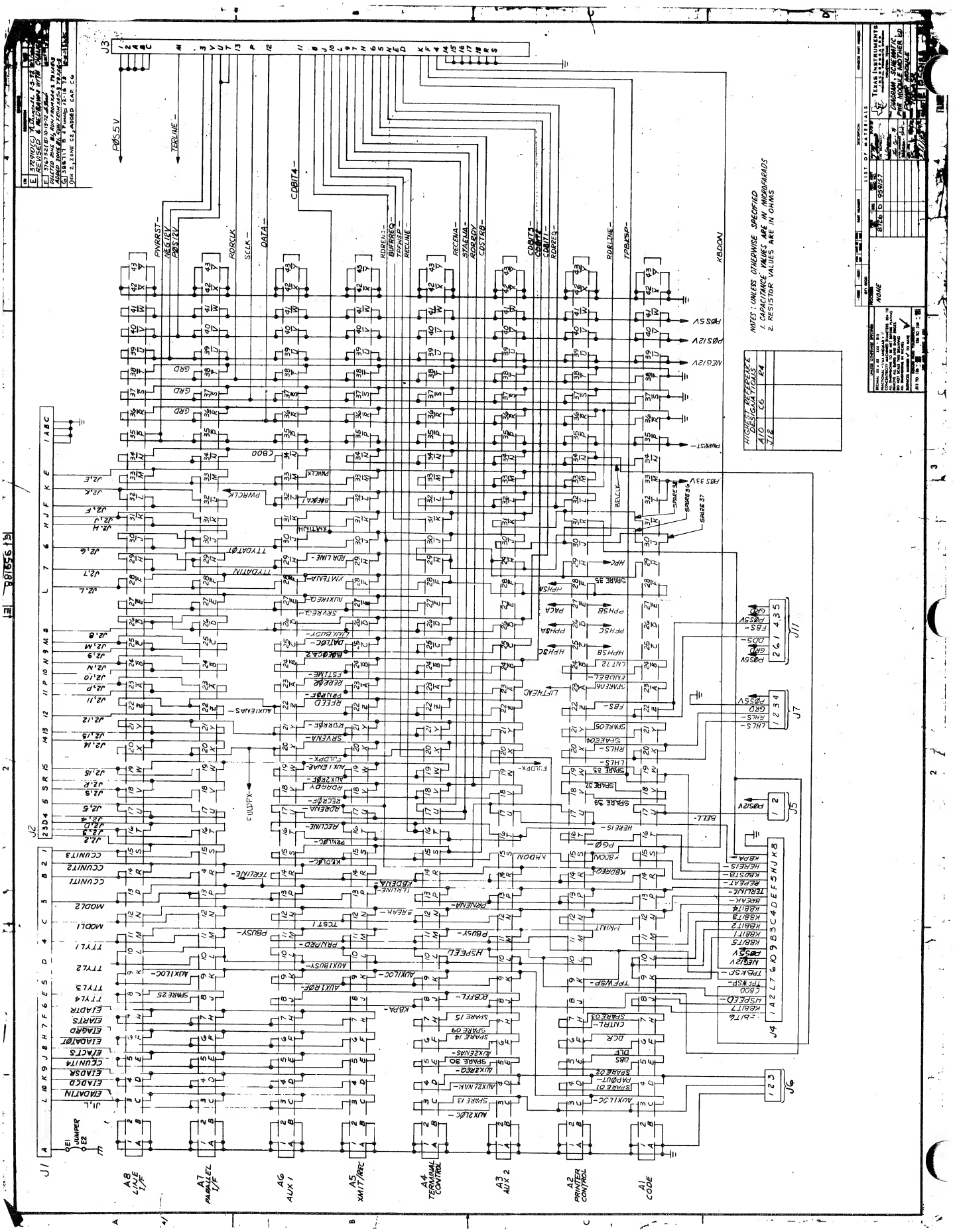

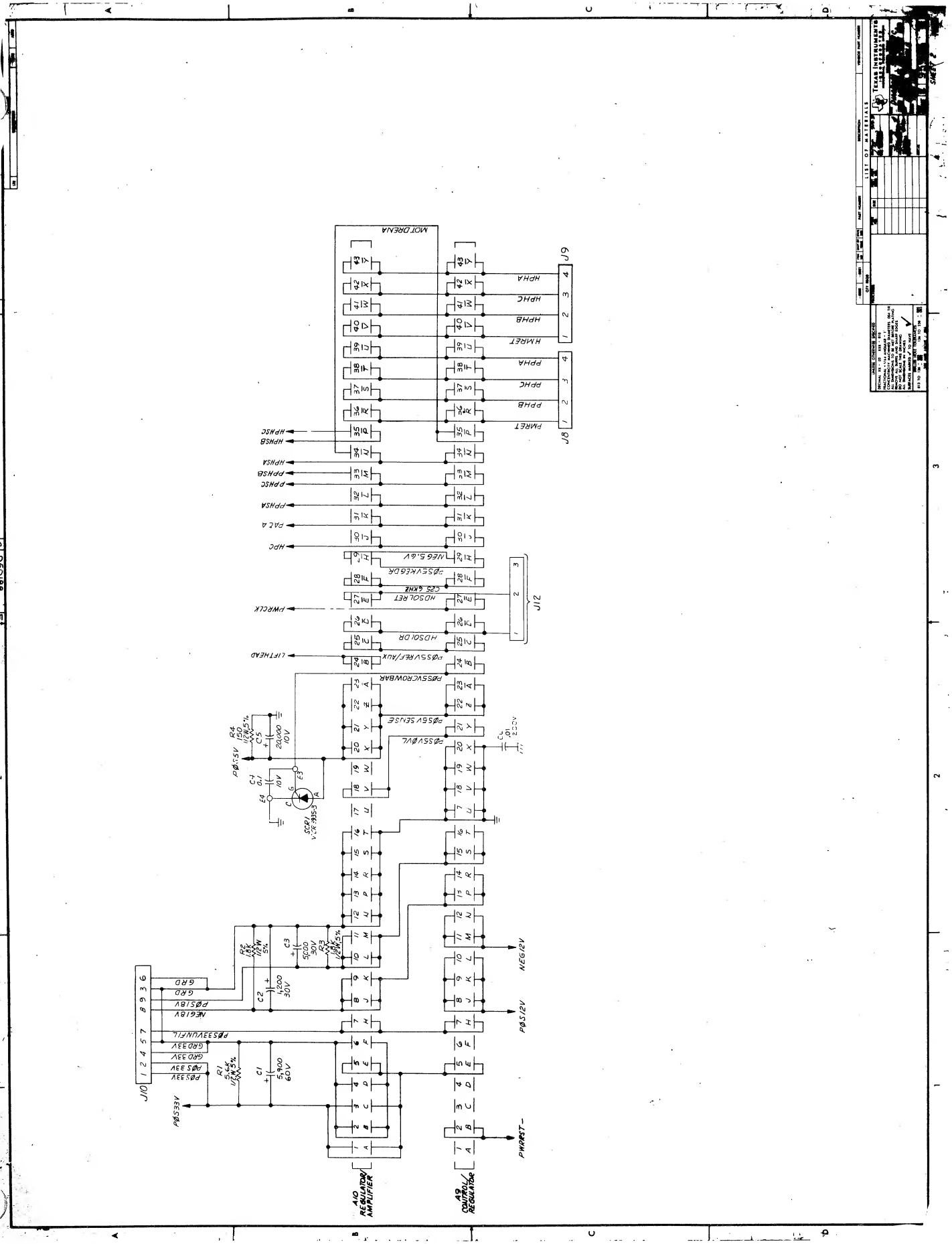
J10
J9
J8
J12
A10 REGULATOR AMPLIFIER
A9 CONTROL REGULATOR
MOTORENA
HPHA
HPHC
HPHB
HMRET
PPHA
PPHC
PPHB
PMRET
HPRSC
HPRSB
HPRSA
PPRSC
PPRSB
PPRSA
PAT A
HPC
NEG5.6V
PØSSVKEGDR
HDSOLRET
CØS GAMR
PWRCLK
HDSOLDR
LIFTHEAD
PØSSVREF/AUX
PØSSVROWBAR
PØSSV SENSE
PØSSVØVL
PØ5V
PØ12V
NEG12V
PWRRST-
PØ33V
GRD
PØS18V
NEG18V
PØS33VUNFIL
GRD33V
PØS 33V
R4 150 1/4W 5%
C5 20000 10V
C4 .01 10V
E3
E4
SCR1 VCR-355-5
C6 .01 2200V
R2 1K 1/2W 5%
R3 1K 1/2W 5%
C3 5000 30V
C2 4200 30V
R1 5.6K 1/2W 5%
C1 5,900 60V

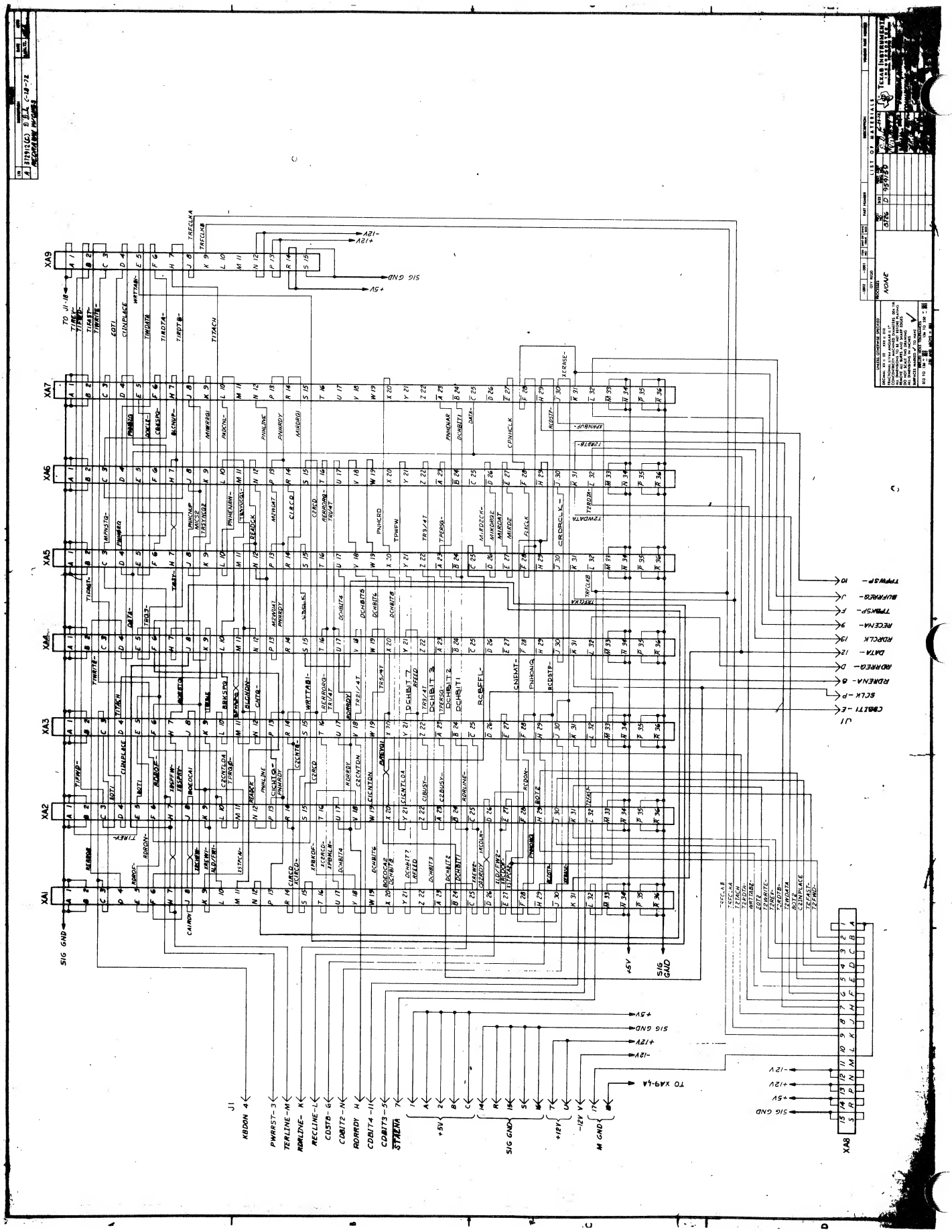

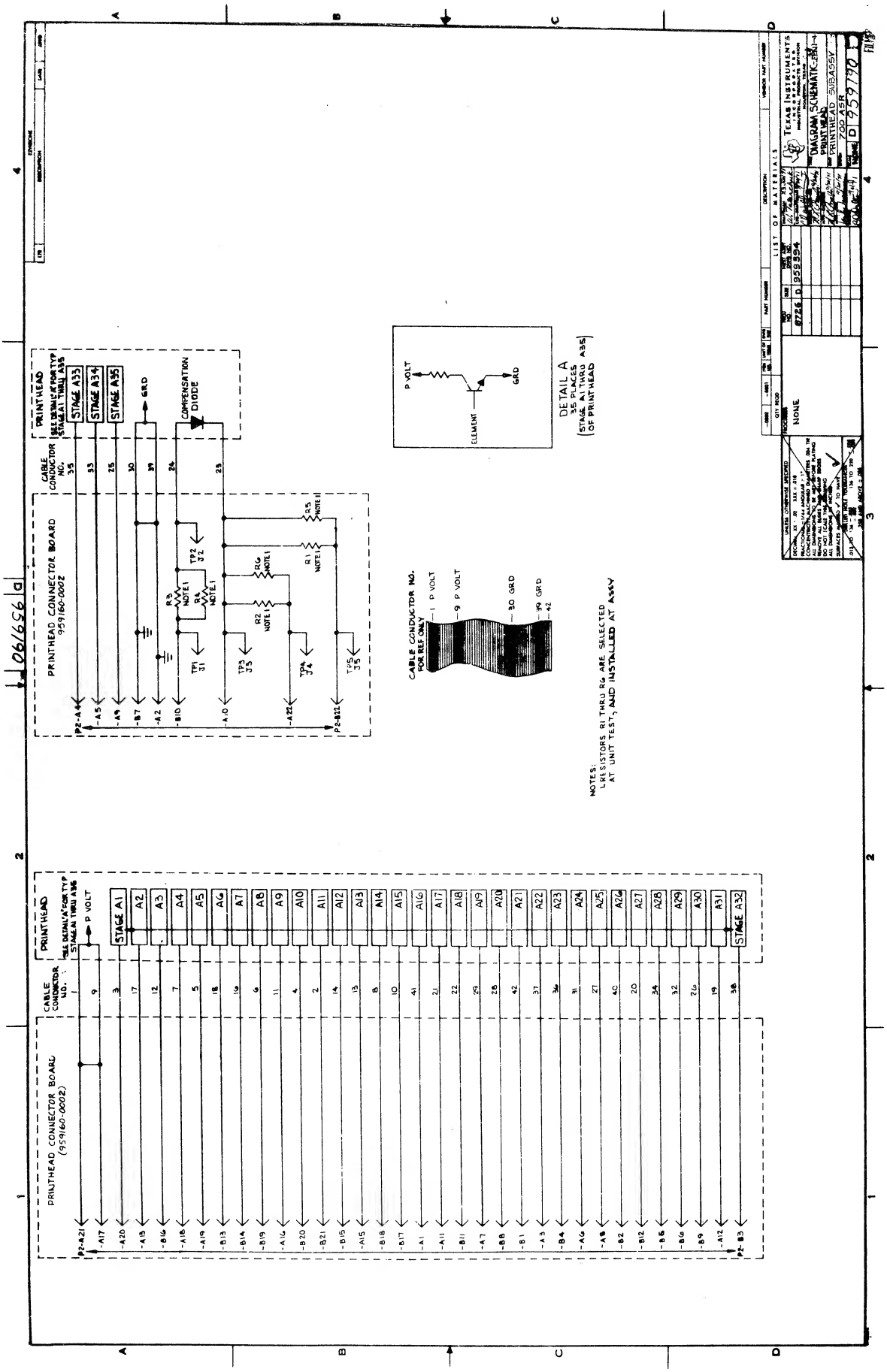
PRINTHEAD CONNECTOR BOARD (959160-0002)
CABLE CONDUCTOR NO.
PRINTHEAD
SEE DETAIL 'A' FOR TYP STAGE A1 THRU A35
P VOLT
STAGE A1
STAGE A32
PRINTHEAD CONNECTOR BOARD 959160-0002
STAGE A33
STAGE A34
STAGE A35
GRD
COMPENSATION DIODE
DETAIL A
35 PLACES
(STAGE A1 THRU A35 OF PRINTHEAD)
ELEMENT
CABLE CONDUCTOR NO. FOR REF ONLY
NOTES:
1. RESISTORS R1 THRU R6 ARE SELECTED AT UNIT TEST, AND INSTALLED AT ASSY
TEXAS INSTRUMENTS
DIAGRAM SCHEMATIC
PRINTHEAD SUBASSY
700 ASR
D 959190
NONE
LIST OF MATERIALS

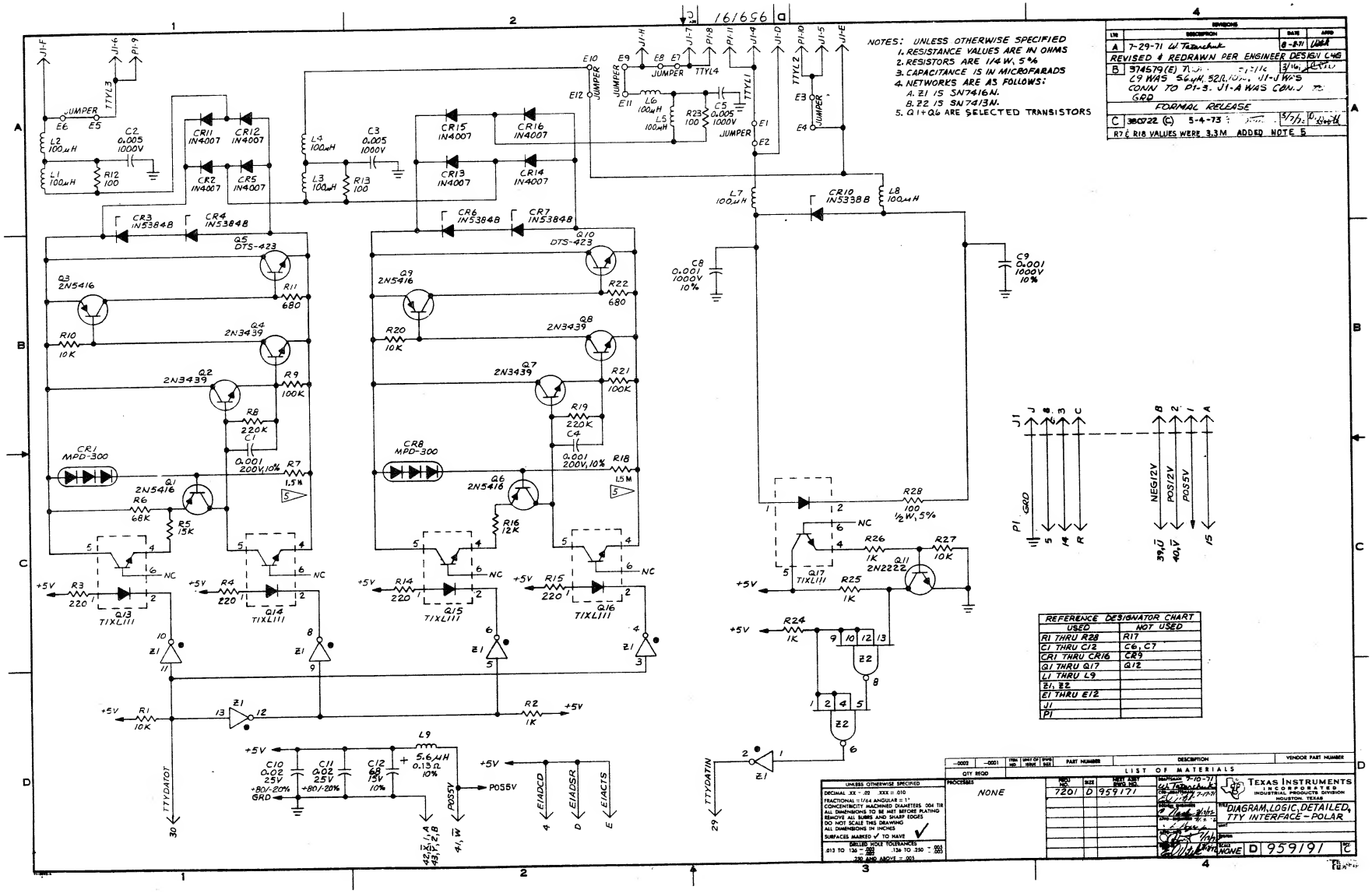
NOTES: UNLESS OTHERWISE SPECIFIED
1. RESISTANCE VALUES ARE IN OHMS
2. RESISTORS ARE 1/4 W, 5%
3. CAPACITANCE IS IN MICROFARADS
4. NETWORKS ARE AS FOLLOWS:
A. Z1 IS SN7416N.
B. Z2 IS SN7413N.
5. Q1+Q6 ARE SELECTED TRANSISTORS
REVISIONS
A 7-29-71 W. Tatarchuk 8-8-71
REVISED & REDRAWN PER ENGINEER DESIGN CHG
B 374579(E) 3/16
L9 WAS 56μH, 52Ω, 10%. J1-J WAS CONN TO P1-3. J1-A WAS CONN TO GRD
FORMAL RELEASE
C 380722 (C) 5-4-73 5/7/73
R7 & R18 VALUES WERE 3.3M ADDED NOTE 5
REFERENCE DESIGNATOR CHART
USED | NOT USED
R1 THRU R28 | R17
C1 THRU C12 | C6, C7
CR1 THRU CR16 | CR9
Q1 THRU Q17 | Q12
L1 THRU L9
Z1, Z2
E1 THRU E12
J1
P1
LIST OF MATERIALS
PART NUMBER
DESCRIPTION
VENDOR PART NUMBER
QTY REQD
PROCESSES
NONE
7201 D 959171
TEXAS INSTRUMENTS INCORPORATED INDUSTRIAL PRODUCTS DIVISION HOUSTON, TEXAS
DIAGRAM, LOGIC, DETAILED, TTY INTERFACE - POLAR
SCALE NONE D 959191 C
UNLESS OTHERWISE SPECIFIED
DECIMAL .XX = .02 .XXX = .010
FRACTIONAL = 1/64 ANGULAR = 1°
CONCENTRICITY MACHINED DIAMETERS .004 TIR
ALL DIMENSIONS TO BE MET BEFORE PLATING
REMOVE ALL BURRS AND SHARP EDGES
DO NOT SCALE THIS DRAWING
ALL DIMENSIONS IN INCHES
SURFACES MARKED ✓ TO HAVE
DRILLED HOLE TOLERANCES
.013 TO .136 = .002 .136 TO .250 = .005
.250 AND ABOVE = .005
CR1 MPD-300
CR8 MPD-300
Q1 2N5416
Q2 2N3439
Q3 2N5416
Q4 2N3439
Q5 DTS-423
Q6 2N5416
Q7 2N3439
Q8 2N3439
Q9 2N5416
Q10 DTS-423
Q11 2N2222
Q13 TIXL111
Q14 TIXL111
Q15 TIXL111
Q16 TIXL111
Q17 TIXL111
CR3 1N5384B
CR4 1N5384B
CR6 1N5384B
CR7 1N5384B
CR10 1N5338B
CR11 1N4007
CR12 1N4007
CR2 1N4007
CR5 1N4007
CR15 1N4007
CR16 1N4007
CR13 1N4007
CR14 1N4007
L1 100μH
L2 100μH
L3 100μH
L4 100μH
L5 100μH
L6 100μH
L7 100μH
L8 100μH
L9 5.6μH 0.13Ω 10%
C2 0.005 1000V
C3 0.005 1000V
C5 0.005 1000V
C8 0.001 1000V 10%
C9 0.001 1000V 10%
C10 0.02 25V +80/-20%
C11 0.02 25V +80/-20%
C12 68 15V 10%
R1 10K
R2 1K
R3 220
R4 220
R5 15K
R6 68K
R7 1.5M
R8 220K
R9 100K
R10 10K
R11 680
R12 100
R13 100
R14 220
R15 220
R16 12K
R18 1.5M
R19 220K
R20 10K
R21 100K
R22 680
R23 100
R24 1K
R25 1K
R26 1K
R27 10K
R28 100 1/2W, 5%
+5V
GRD
NC
TTYDATOT
TTYDATIN
POS5V
E1ADCD
E1ADSR
E1ACTS
NEG12V
POS12V
POS5V
J1
P1

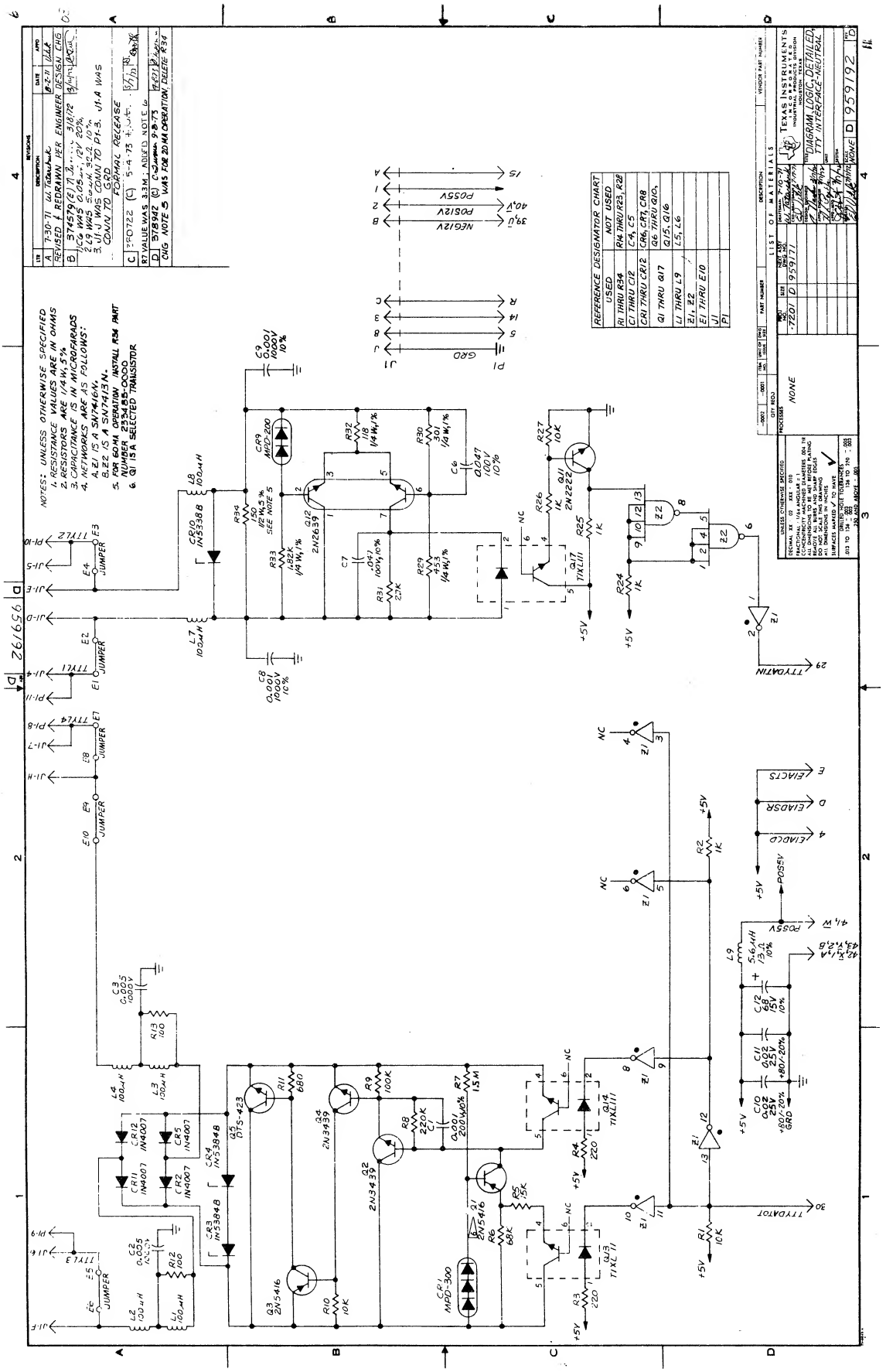

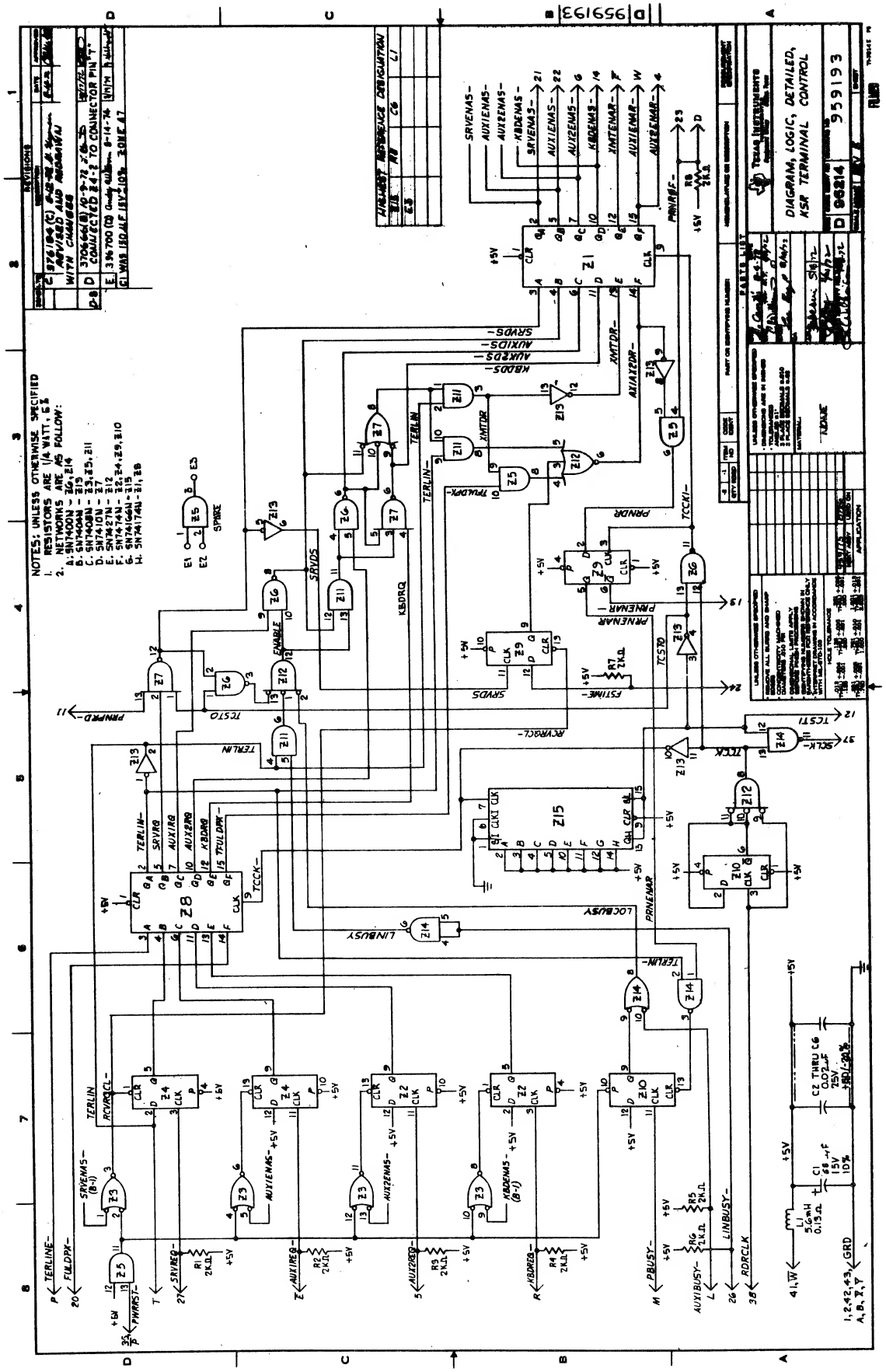
NOTES: UNLESS OTHERWISE SPECIFIED
1. RESISTORS ARE 1/4 WATT, 5%
2. NETWORKS ARE AS FOLLOW:
A: SN7400N - Z6, Z14
B: SN7404N - Z13
C: SN7408N - Z3, Z5, Z11
D: SN7410N - Z7
E: SN7427N - Z12
F: SN7474N - Z2, Z4, Z9, Z10
G: SN74166N - Z15
H: SN74174N - Z1, Z8
HIGHEST REFERENCE DESIGNATION
DIAGRAM, LOGIC, DETAILED, KSR TERMINAL CONTROL
959193

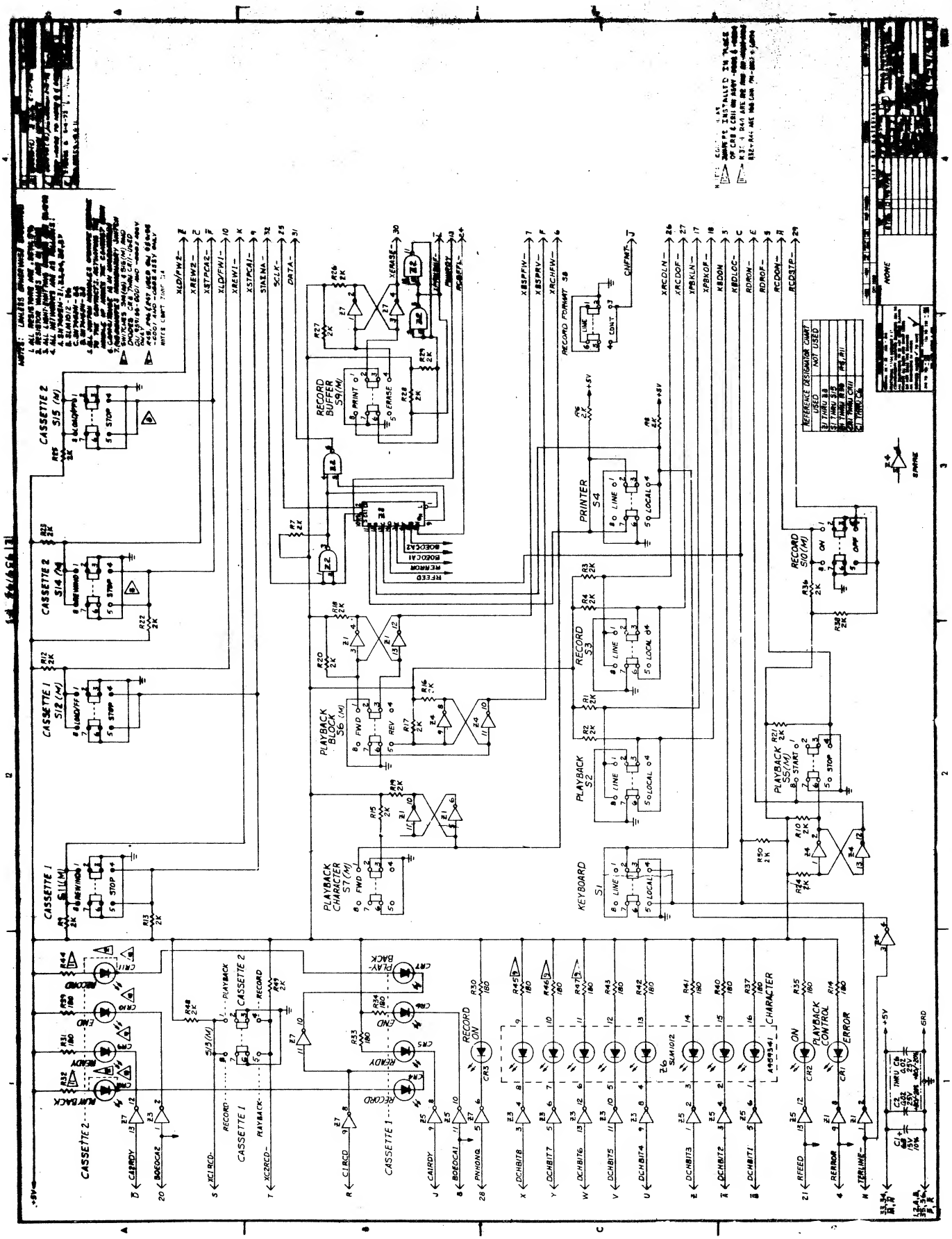

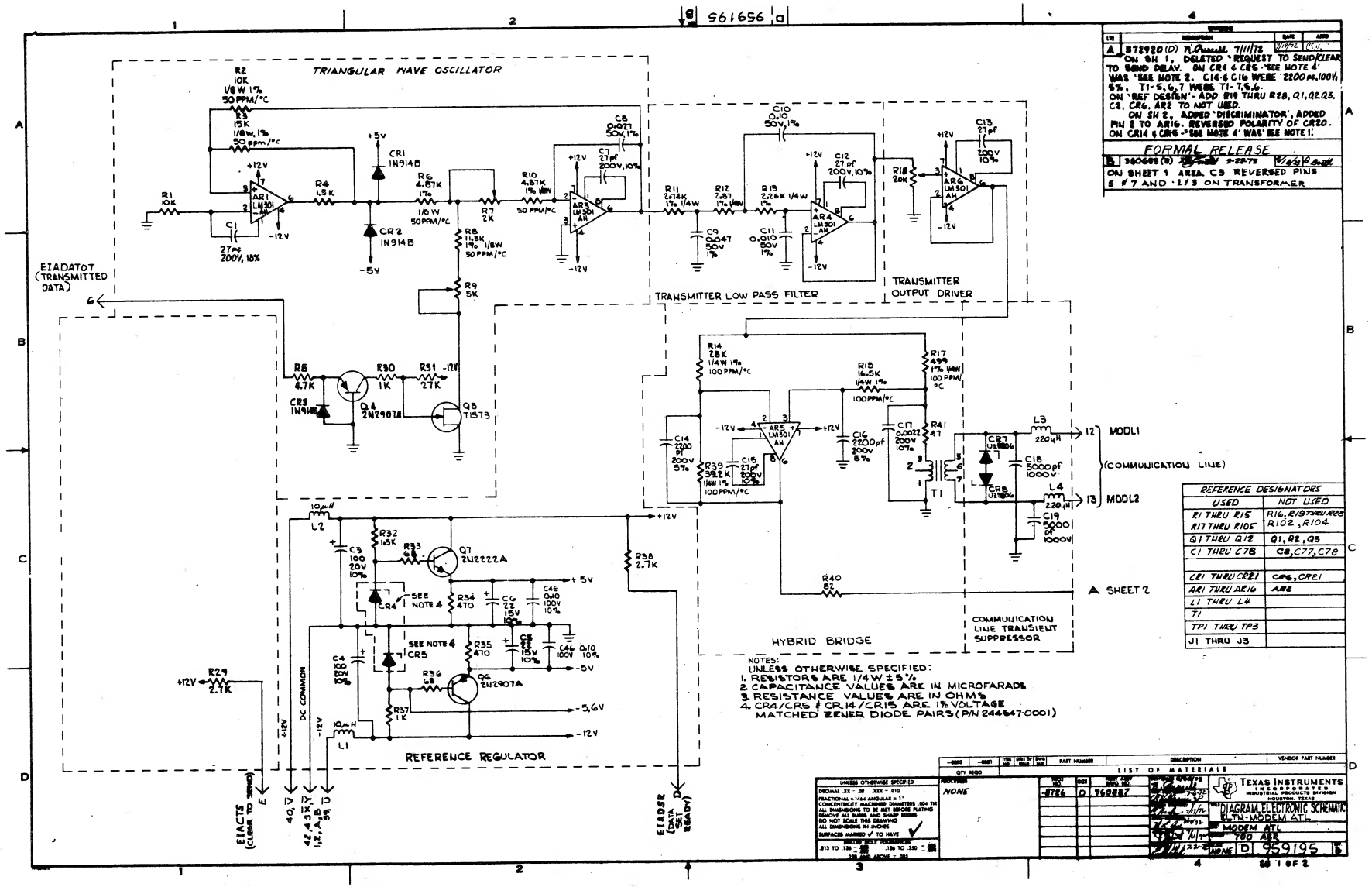
TRIANGULAR WAVE OSCILLATOR
TRANSMITTER LOW PASS FILTER
TRANSMITTER OUTPUT DRIVER
HYBRID BRIDGE
COMMUNICATION LINE TRANSIENT SUPPRESSOR
REFERENCE REGULATOR
EIADATOT (TRANSMITTED DATA)
EIACTS (CLEAR TO SEND)
EIADER (DATA SET READY)
DC COMMON
MODL1
MODL2
(COMMUNICATION LINE)
A SHEET 2
NOTES:
UNLESS OTHERWISE SPECIFIED:
1. RESISTORS ARE 1/4W ± 5%
2. CAPACITANCE VALUES ARE IN MICROFARADS
3. RESISTANCE VALUES ARE IN OHMS
4. CR4/CR5 & CR14/CR15 ARE 1% VOLTAGE MATCHED ZENER DIODE PAIRS (P/N 244547-0001)
A 372920 (D) 7/11/72
ON SH 1, DELETED 'REQUEST TO SEND/CLEAR TO SEND DELAY. ON CR4 & CR5 - 'SEE NOTE 4' WAS 'SEE NOTE 2. C14 & C16 WERE 2200 pf, 100V, 5%, T1-5,6,7 WERE T1-7,5,6.
ON 'REF DESIGN' - ADD R19 THRU R28, Q1, Q2, Q5, C2, CR6, AR2 TO NOT USED.
ON SH 2, ADDED 'DISCRIMINATOR', ADDED PIN 2 TO AR16. REVERSED POLARITY OF CR20.
ON CR14 & CR15 - 'SEE NOTE 4' WAS 'SEE NOTE 1'.
FORMAL RELEASE
B 380669 (B) 9-28-73
ON SHEET 1 AREA C3 REVERSED PINS 5 & 7 AND 1 & 3 ON TRANSFORMER
REFERENCE DESIGNATORS
USED | NOT USED
R1 THRU R15 | R16, R19 THRU R28
R17 THRU R105 | R102, R104
Q1 THRU Q12 | Q1, Q2, Q3
C1 THRU C78 | C2, C77, C78
CR1 THRU CR21 | CR6, CR21
AR1 THRU AR16 | AR2
L1 THRU L4
T1
TP1 THRU TP3
J1 THRU J3
LIST OF MATERIALS
TEXAS INSTRUMENTS INCORPORATED
DIAGRAM, ELECTRONIC SCHEMATIC
ELTN-MODEM ATL
MODEM ATL
TOD AER
D 959195
SH 1 OF 2

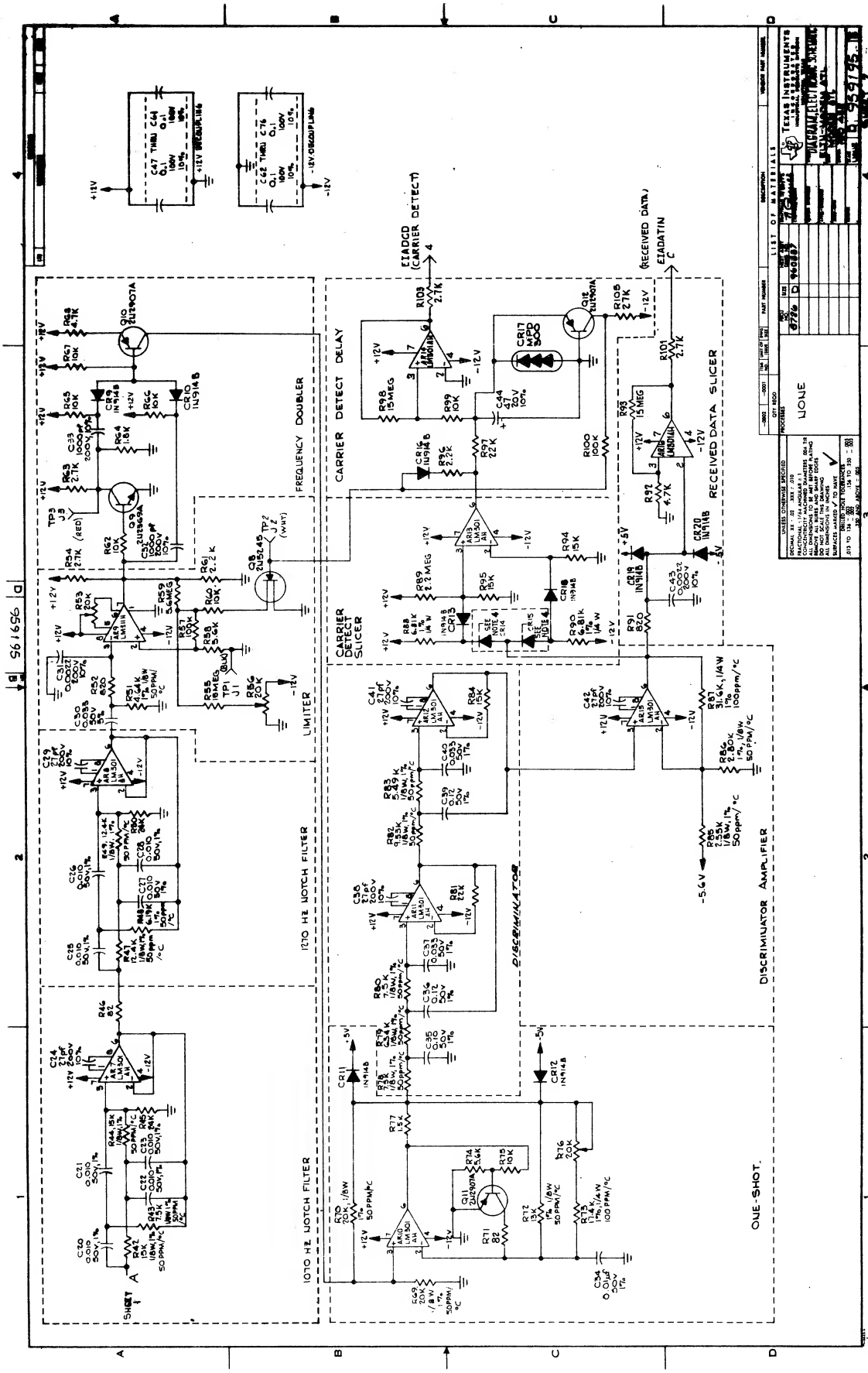
1070 HZ NOTCH FILTER
LIMITER
FREQUENCY DOUBLER
CARRIER DETECT DELAY
CARRIER DETECT SLICER
RECEIVED DATA SLICER
DISCRIMINATOR AMPLIFIER
ONE-SHOT
EIADCD (CARRIER DETECT)
EIADATIN (RECEIVED DATA)
TEXAS INSTRUMENTS

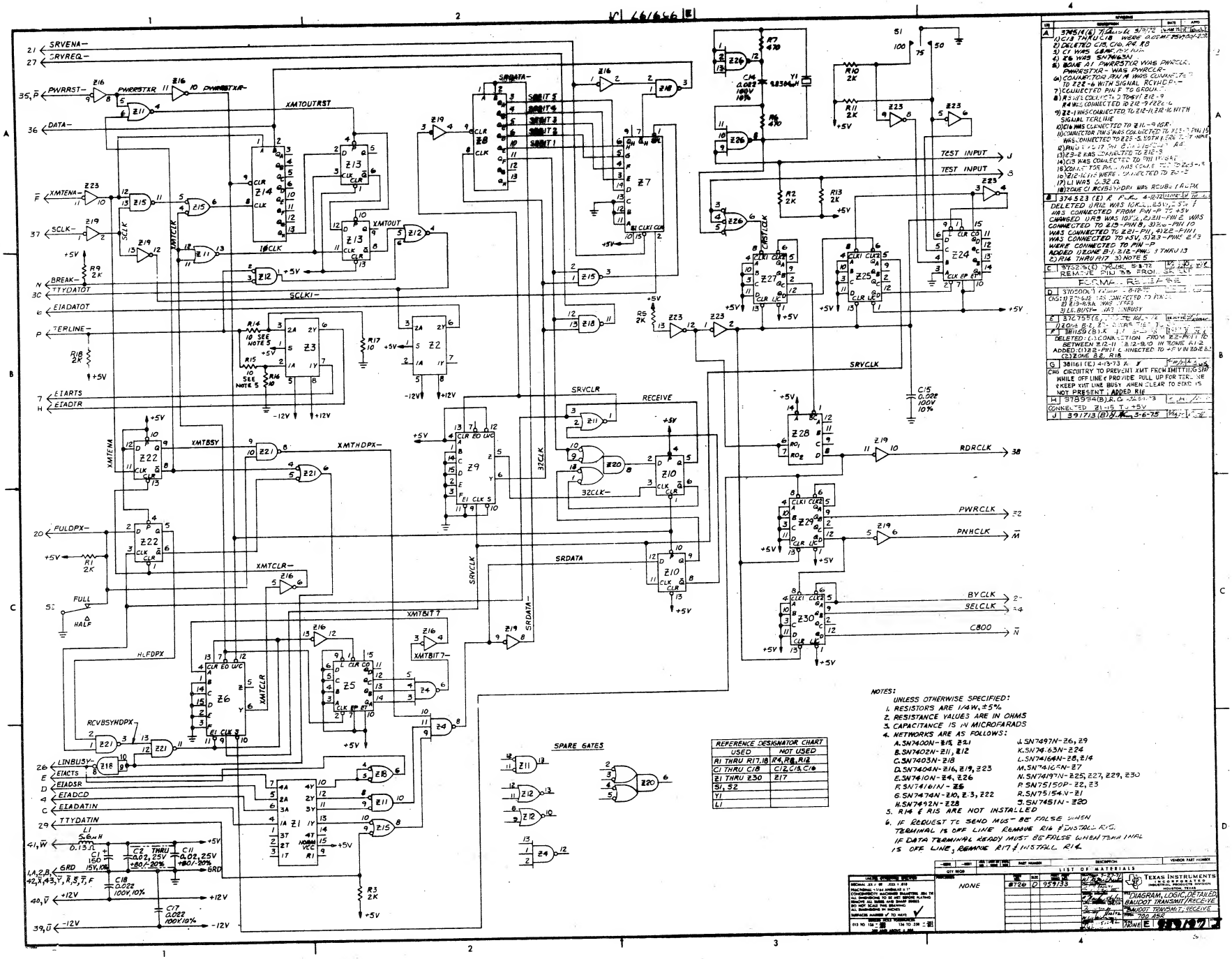

NOTES:
UNLESS OTHERWISE SPECIFIED:
1. RESISTORS ARE 1/4W, ±5%
2. RESISTANCE VALUES ARE IN OHMS
3. CAPACITANCE IS IN MICROFARADS
4. NETWORKS ARE AS FOLLOWS:
A. SN7400N–Z15, Z21
B. SN7402N–Z11, Z12
C. SN7403N–Z18
D. SN7404N–Z16, Z19, Z23
E. SN7410N–Z4, Z26
F. SN74161N–Z6
G. SN74174N–Z10, Z3, Z22
H. SN7492N–Z28
J. SN7497N–Z6, Z9
K. SN74163N–Z24
L. SN74164N–Z8, Z14
M. SN7416TN–Z7
N. SN74197N–Z25, Z27, Z29, Z30
P. SN75150P–Z2, Z3
R. SN75154V–Z1
S. SN7451N–Z20
5. R14 & R15 ARE NOT INSTALLED
6. IF REQUEST TO SEND MUST BE FALSE WHEN TERMINAL IS OFF LINE REMOVE R16 & INSTALL R15. IF DATA TERMINAL READY MUST BE FALSE WHEN TERMINAL IS OFF LINE, REMOVE R17 & INSTALL R14.

REFERENCE DESIGNATOR CHART	
USED	NOT USED
R1 THRU R17, R18	R4, R6, R12
C1 THRU C18	C12, C13, C16
Z1 THRU Z30	Z17
S1, S2	
Y1	
L1	

REVISIONS			
LTR	DESCRIPTION	DATE	APPD
A	3745(1)(E) T/[illegible] 5/19/72 1) C13 THRU C18 WERE .0.0CMF 2) DELETED C15, C16, R4, R6 3) C7 WAS .68MF, NOW .1MF 4) Z6 WAS SN7416N 5) SIGNAL A1 PWRRSTXR WAS PWRCLR. PWRRSTXR WAS PWRCLR– 6) CONNECTOR PIN M WAS CONNECTED TO Z22-6 WITH SIGNAL RCVHDPX– 7) C1 CONNECTED PIN F TO GROUND 8) R5 WAS CONNECTED TO Z1E-9 R4 WAS CONNECTED TO Z1E-9 Z22-6 9) Z2-1 WAS CONNECTED TO Z1E-16 WITH SIGNAL TERLINE 10) C16 WAS CONNECTED TO Z11-9 IGR. 11) CONNECTOR PIN S WAS CONNECTED TO Z15-1 PIN 15 WAS CONNECTED TO Z23-5 SCRATCH 12) PIN 1 OF Z17 WAS CONNECTED TO Z1E-9 13) Z3-2 WAS CONNECTED TO Z1E-9 14) C13 WAS CONNECTED TO Z11 11 15) Z24-1 WAS CONNECTED TO Z23-9 16) Z21-12 WERE CONNECTED TO Z6-2 17) L1 WAS 5.32 Ω 18) TONE C) RCVBSYHDPX WAS RCVBSYHDPX		
B	3745 23 (E) R. F. 4-12-72 DELETED 1) R12 WAS 10K, 5%, .25W, STYLE CB, WAS CONNECTED FROM PIN P TO +5V CHANGED TO R13 WAS 10K, 5%, .25W, STYLE CB, WAS CONNECTED TO Z15-PIN 8, 3) Z30-PIN 10 WAS CONNECTED TO Z21-PIN 4, Z22-PIN 11 WAS CONNECTED TO A5V, 5123-PINS 2,13 WERE CONNECTED TO PIN –P ADDED 1) ZONE B-1, Z12-PINS 3 THRU 13 2) R14 THRU R17 3) NOTE 5		
C	3745 25 (E) 7-20-72 REMOVE PIN 3B FROM SR CKT FROM PIN		
D	3745 00 (E) 7-18-72 CHG 1) Z16-6,8 WAS CONNECTED TO PIN 2) Z19-8,9A WAS TIED 3) L1, BUSY WAS NBUSY		
E	3745 55 (E) 8-[illegible]-72 1) ZONE B-2, Z[illegible] WAS TIED TO [illegible] DELETED: 1) CONNECTION FROM Z27-PIN 11 BETWEEN B-2, H-12 TO Z9 IN ZONE A-2 ADDED: 1) Z23-PIN 1 CONNECTED TO +5V IN ZONE B-2 2) ZONE B-2, R18		
F	3811 59 (B) K. [illegible] DELETED: 1) CONNECTION FROM Z27-PIN 11 BETWEEN B-2, H-12 TO Z9 IN ZONE A-2 ADDED: 1) Z23-PIN 1 CONNECTED TO +5V IN ZONE B-2 2) ZONE B-2, R18		
G	3811 61 (E) 4-13-73 A. [illegible] CHG CIRCUITRY TO PREVENT XMT FROM XMITTING SPACE WHILE OFF LINE & PROVIDE PULL UP FOR TERMINAL KEEP XMT LINE BUSY WHEN CLEAR TO SEND IS NOT PRESENT. ADDED R18		
H	3789 34 (B) J. R. G. [illegible]		
CONNECTED Z1-15 TO +5V			
J	391713 (B) T. A. [illegible] 5-6-75		

LIST OF MATERIALS					
QTY REQD	PART NUMBER	DESCRIPTION	VENDOR PART NUMBER		
NONE					

DRAWN	[illegible] 5-24-72	TEXAS INSTRUMENTS INCORPORATED	
CHECKED	[illegible] 5-24-72	INDUSTRIAL SYSTEMS	
ENGR	[illegible] 5-24-72	HOUSTON, TEXAS	
MFG	[illegible] 5-24-72	DIAGRAM, LOGIC, DETAILED RAUDOT TRANSMIT/RECEIVE	
QUALITY	[illegible] 5-24-72		
MATERIAL	[illegible] 5-24-72	RAUDOT TRANSMIT, RECEIVE	
NEXT ASSY	NONE	700 ASR	

8726 D 959733 E

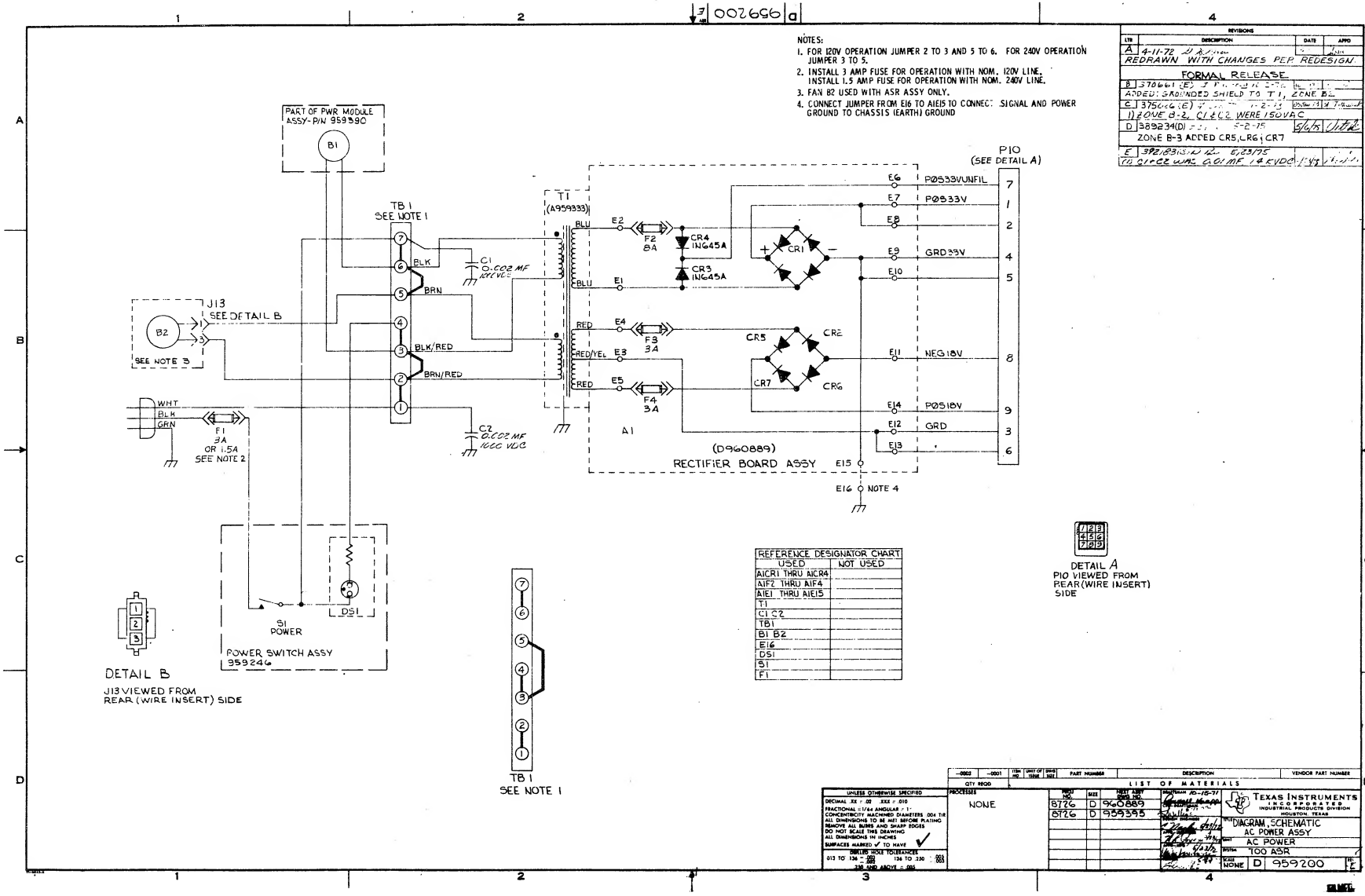
NOTES:
1. FOR 120V OPERATION JUMPER 2 TO 3 AND 5 TO 6. FOR 240V OPERATION JUMPER 3 TO 5.
2. INSTALL 3 AMP FUSE FOR OPERATION WITH NOM. 120V LINE. INSTALL 1.5 AMP FUSE FOR OPERATION WITH NOM. 240V LINE.
3. FAN B2 USED WITH ASR ASSY ONLY.
4. CONNECT JUMPER FROM E16 TO A1E15 TO CONNECT SIGNAL AND POWER GROUND TO CHASSIS (EARTH) GROUND
REVISIONS
A 4-11-72
REDRAWN WITH CHANGES PER REDESIGN.
FORMAL RELEASE
B 370661 (E)
ADDED: GROUNDED SHIELD TO T1, ZONE B2
C 375026 (E)
1) ZONE B-2, C1 & C2 WERE 150VAC
D 389234(D) 5-2-75
ZONE B-3 ADDED CR5, CR6 & CR7
E 392183(E) 5/23/75
C1 & C2 WAS 0.01 MF 1.4 KVDC
PART OF PWR MODULE ASSY-P/N 959390
B1
TB1 SEE NOTE 1
BLK
BRN
BLK/RED
BRN/RED
C1 0.002 MF 1000 VDC
C2 0.002 MF 1000 VDC
J13 SEE DETAIL B
B2
SEE NOTE 3
WHT
BLK
GRN
F1 3A OR 1.5A SEE NOTE 2
T1 (A959333)
BLU
RED
RED/YEL
E1
E2
E3
E4
E5
F2 8A
F3 3A
F4 3A
CR4 1N645A
CR3 1N645A
CR1
CR2
CR5
CR6
CR7
A1
(D960889)
RECTIFIER BOARD ASSY
E15
E16 NOTE 4
P10 (SEE DETAIL A)
E6 P0S33VUNFIL
E7 P0S33V
E8
E9 GRD33V
E10
E11 NEG18V
E14 P0S18V
E12 GRD
E13
S1 POWER
DS1
POWER SWITCH ASSY 959246
DETAIL B
J13 VIEWED FROM REAR (WIRE INSERT) SIDE
TB1 SEE NOTE 1
DETAIL A
P10 VIEWED FROM REAR (WIRE INSERT) SIDE
REFERENCE DESIGNATOR CHART
USED
NOT USED
A1CR1 THRU A1CR4
A1F2 THRU A1F4
A1E1 THRU A1E15
T1
C1 C2
TB1
B1 B2
E16
DS1
S1
F1
LIST OF MATERIALS
PROCESSES
NONE
8726 D 960889
8726 D 959395
TEXAS INSTRUMENTS INCORPORATED INDUSTRIAL PRODUCTS DIVISION HOUSTON, TEXAS
DIAGRAM, SCHEMATIC AC POWER ASSY
AC POWER
700 ASR
SCALE NONE
D 959200
E

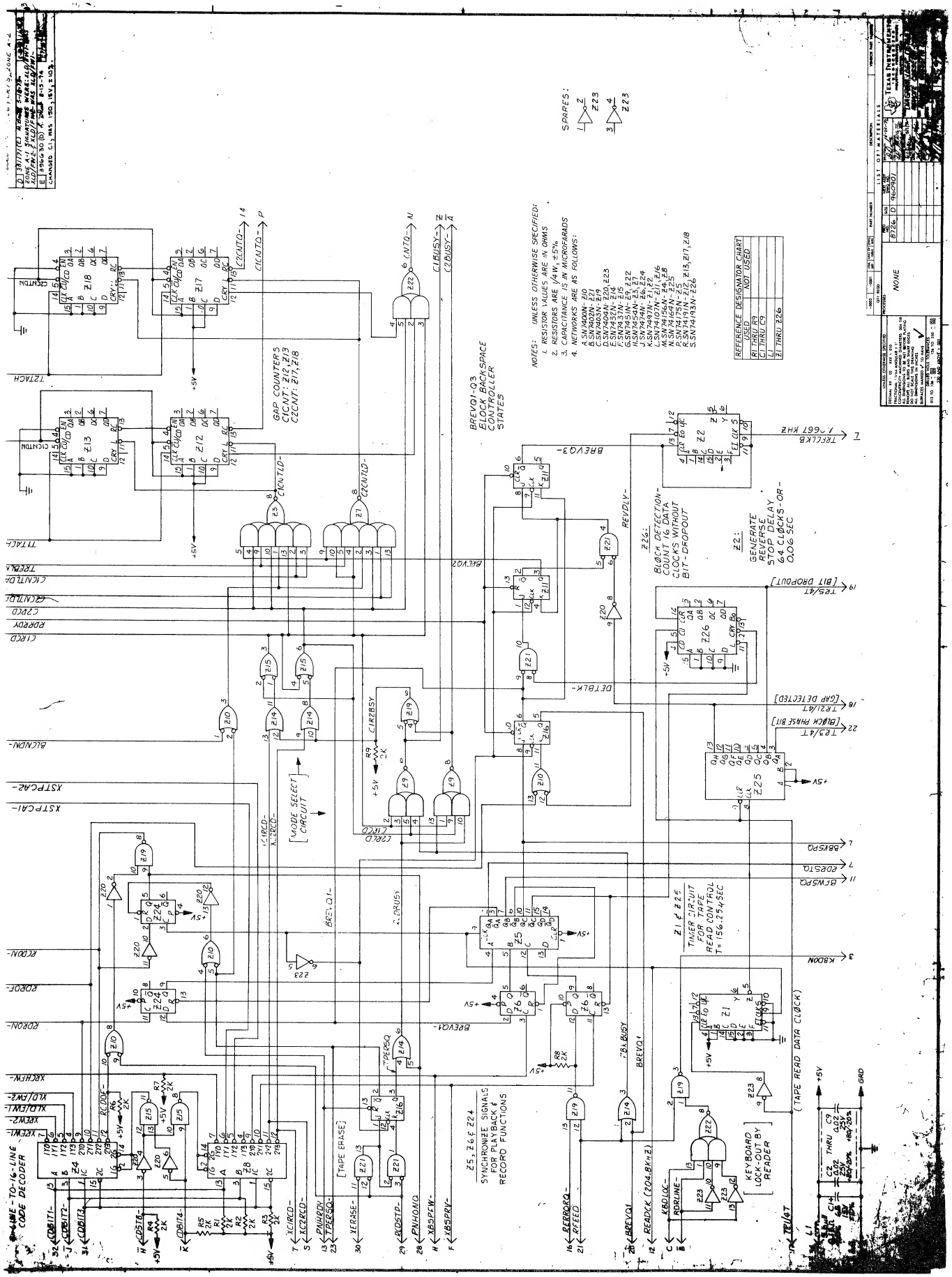
NOTES: UNLESS OTHERWISE SPECIFIED:
1. RESISTOR VALUES ARE IN OHMS
2. RESISTORS ARE 1/4W, ±5%
3. CAPACITANCE IS IN MICROFARADS
4. NETWORKS ARE AS FOLLOWS:
A. SN74000N-Z10
B. SN74020N-Z21
C. SN74030N-Z19
D. SN74004N-Z20, Z23
E. SN74320N-Z14
F. SN74331N-Z15
G. SN74151N-Z9, Z22
H. SN74154N-Z3, Z7
J. SN74194N-Z6, Z24
K. SN74197N-Z1, Z2
L. SN74107N-Z11, Z16
M. SN74156N-Z4, Z8
N. SN74164N-Z25
P. SN74175N-Z5
R. SN74191N-Z12, Z13, Z17, Z18
S. SN74193N-Z26
REFERENCE DESIGNATOR CHART
USED NOT USED
R1 THRU R9
C1 THRU C9
L1
Z1 THRU Z26
SPARES:
GAP COUNTERS
C1CNT: Z12, Z13
C2CNT: Z17, Z18
BREVQ1-Q3
BLOCK BACKSPACE
CONTROLLER
STATES
Z26:
BLOCK DETECTION-
COUNT 16 DATA
CLOCKS WITHOUT
BIT-DROPOUT
Z2:
GENERATE
REVERSE
STOP DELAY
64 CLOCKS-OR-
0.06 SEC
Z1 & Z25
TIMER CIRCUIT
FOR TAPE
READ CONTROL
T=156.254 SEC
Z5, Z6 & Z24
SYNCHRONIZE SIGNALS
FOR PLAYBACK &
RECORD FUNCTIONS
KEYBOARD
LOCK-OUT BY
READER
MODE SELECT
CIRCUIT
TAPE ERASE
(TAPE READ DATA CLOCK)
LINE-TO-16-LINE
CODE DECODER
TRECLKB
1.0667 KHZ
[BIT DROPOUT]
[GAP DETECTED]
[BLOCK PHASE BIT]
NONE
TEXAS INSTRUMENTS
DATA SYSTEMS
8726 D 960901

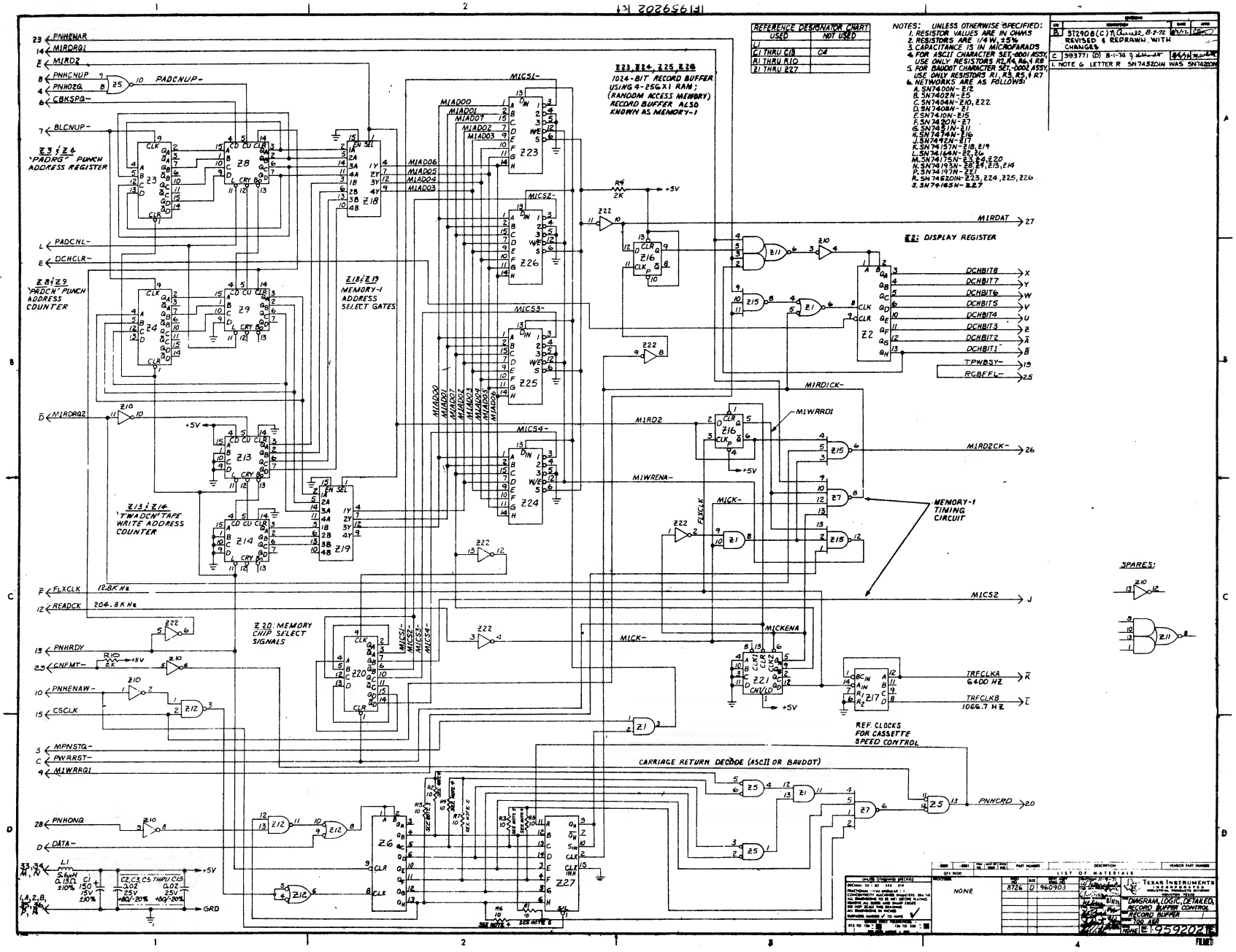
REFERENCE DESIGNATOR CHART
USED
NOT USED
NOTES: UNLESS OTHERWISE SPECIFIED:
1. RESISTOR VALUES ARE IN OHMS
2. RESISTORS ARE 1/4 W, ±5%
3. CAPACITANCE IS IN MICROFARADS
4. FOR ASCII CHARACTER SET-0001 ASSY, USE ONLY RESISTORS R1, R4, R6, & R8
5. FOR BAUDOT CHARACTER SET-0002 ASSY, USE ONLY RESISTORS R1, R3, R5, & R7
6. NETWORKS ARE AS FOLLOWS:
A. SN7400N - Z12
B. SN7402N - Z5
C. SN7404N - Z10, Z22
D. SN7408N - Z1
E. SN74 10N - Z15
F. SN7420N - Z7
G. SN7438N - Z11
H. SN7474N - Z16
J. SN7442N - Z17
K. SN74157N - Z18, Z19
L. SN74164N - Z2, Z6
M. SN74175N - Z3, Z4, Z20
N. SN74193N - Z8, Z9, Z13, Z14
P. SN74197N - Z21
R. SN74S20N - Z23, Z24, Z25, Z26
S. SN74S05N - Z27
Z23, Z24, Z25, Z26
1024-BIT RECORD BUFFER USING 4-256X1 RAM'S (RANDOM ACCESS MEMORY) RECORD BUFFER ALSO KNOWN AS MEMORY-1
Z3 & Z4 "PADRG" PUNCH ADDRESS REGISTER
Z8 & Z9 "PADCH" PUNCH ADDRESS COUNTER
Z13 & Z14 "TWADCH" TAPE WRITE ADDRESS COUNTER
Z18 & Z19 MEMORY-1 ADDRESS SELECT GATES
Z20: MEMORY CHIP SELECT SIGNALS
Z2: DISPLAY REGISTER
MEMORY-1 TIMING CIRCUIT
REF. CLOCKS FOR CASSETTE SPEED CONTROL
CARRIAGE RETURN DECODE (ASCII OR BAUDOT)
SPARES:
PNHENAR
MIRDRQ1
MIRDR2
PNHCNUP
PNHOZQ
CBKSPQ-
PADCNUP-
BLCNUP-
PADCNL-
DCHCLR-
MIRDRQ2
FLXCLK
12.8K Hz
READCK
204.8K Hz
PNHRDY
CNFMT-
PNHENAW-
CSCLK
MPNSTQ-
PWRRST-
M1WRRQ1
PNHONQ
DATA-
+5V
GRD
MIADOO
MIADO1
MIADO7
MIADO2
MIADO3
MIADO6
MIADO5
MIADO4
MICS1-
MICS2-
MICS3-
MICS4-
M1RDAT
DCHBIT8
DCHBIT7
DCHBIT6
DCHBIT5
DCHBIT4
DCHBIT3
DCHBIT2
DCHBIT1
TPWBSY-
RCBFFL-
MIRDICK-
M1WRRDI
M1RD2
M1RD2CK-
M1WRENA-
MICK-
MICKENA
TRFCLKA 6400 HZ
TRFCLKB 1066.7 HZ
PNHCRD
Texas Instruments
DIAGRAM, LOGIC, DETAILED, RECORD BUFFER CONTROL
700 ASR
1959202

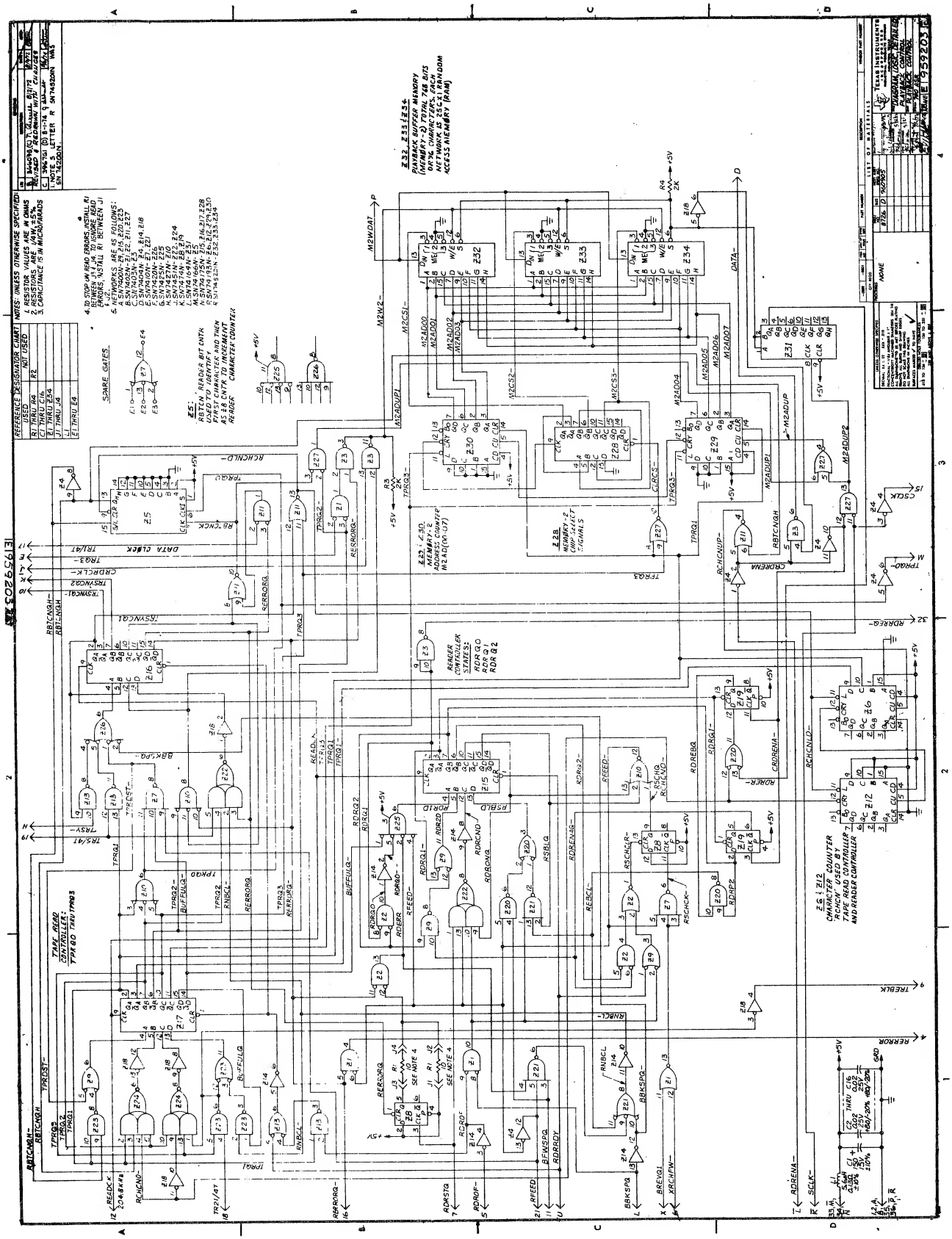

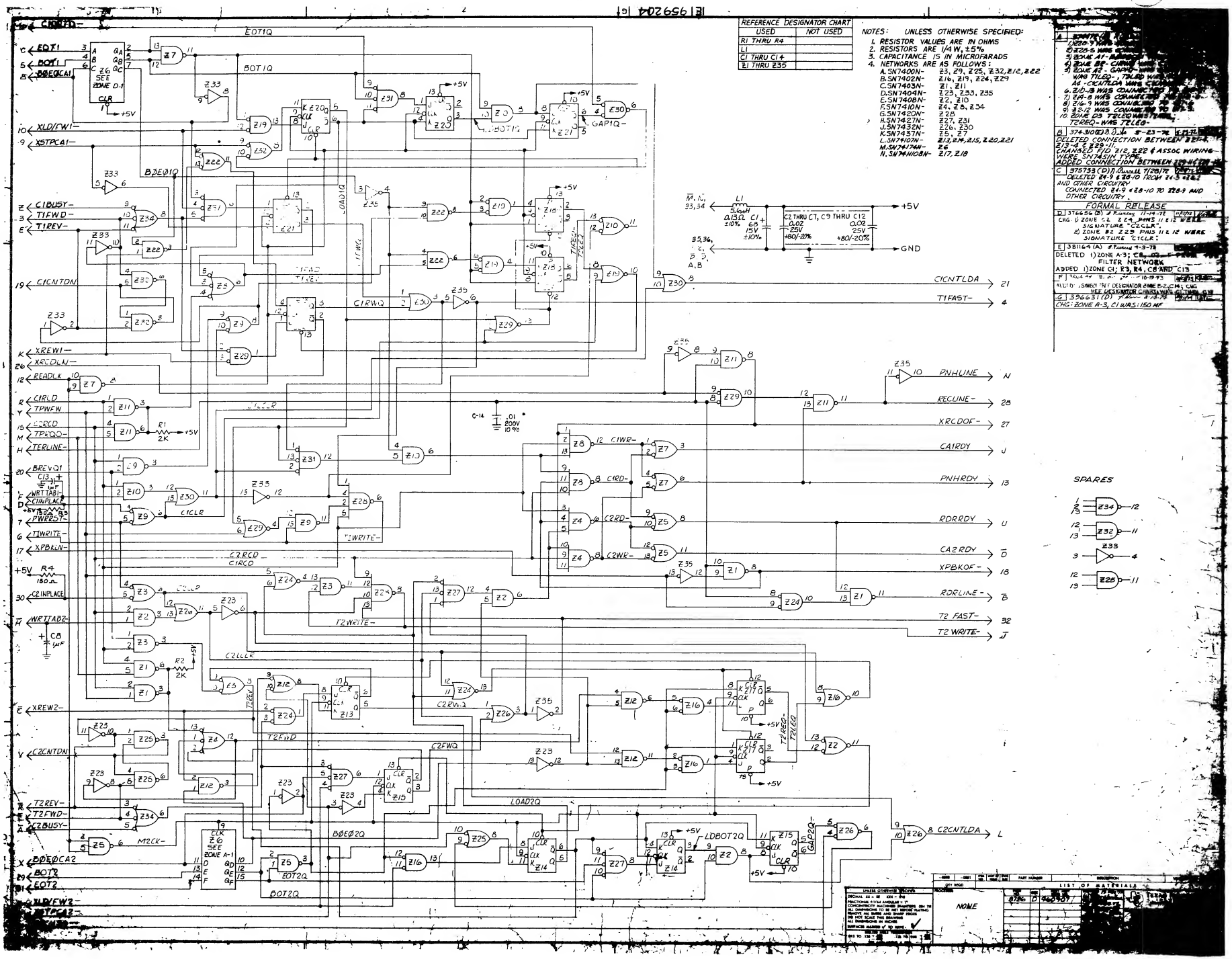
REFERENCE DESIGNATOR CHART
USED
NOT USED
R1 THRU R4
L1
C1 THRU C14
Z1 THRU Z35
NOTES: UNLESS OTHERWISE SPECIFIED:
1. RESISTOR VALUES ARE IN OHMS
2. RESISTORS ARE 1/4 W, ±5%
3. CAPACITANCE IS IN MICROFARADS
4. NETWORKS ARE AS FOLLOWS:
A. SN7400N- Z3, Z9, Z25, Z32, Z12, Z22
B. SN7402N- Z16, Z19, Z24, Z29
C. SN7403N- Z1, Z11
D. SN7404N- Z23, Z33, Z35
E. SN7408N- Z2, Z10
F. SN7410N- Z4, Z8, Z34
G. SN7420N- Z28
H. SN7427N- Z27, Z31
J. SN7432N- Z26, Z30
K. SN7437N- Z5, Z7
L. SN74107N- Z13, Z14, Z15, Z20, Z21
M. SN74174N- Z6
N. SN74H108N- Z17, Z18
EOT1Q
BOT1Q
BØEØ1Q
GAP1Q-
LOAD1Q
T1WC
T1FAST
T1REQ
T1READ TIME
C1RWQ
C1CLR
T1WRITE-
C1RCD
C1WR-
C1RD-
C2RD-
C2WR-
C2RCD-
C2INPLACE
C2LLCR
T2WRITE-
T2REV
T2REQ
T2FWD
C2FWQ
C2RWQ
LOAD2Q
BØEØ2Q
EOT2Q
LDBOT2Q
GAP2Q
M2CK-
L1
5.6uH
±10%
C1
68
15V
±10%
C2 THRU C7, C9 THRU C12
0.02
25V
+80/-20%
GND
C-14
.01
600V
10%
C1CNTLDA
T1FAST-
PNHLINE
RECLINE-
XRCDOF-
CA1RDY
PNHRDY
RDRRDY
CA2RDY
XPBKOF-
RDRLINE-
T2 FAST-
T2 WRITE-
C2CNTLDA
SPARES
Z34
Z32
Z38
Z25
LIST OF MATERIALS
QTY REQD
PART NUMBER
DESCRIPTION
NONE
SIZE
D
9592041

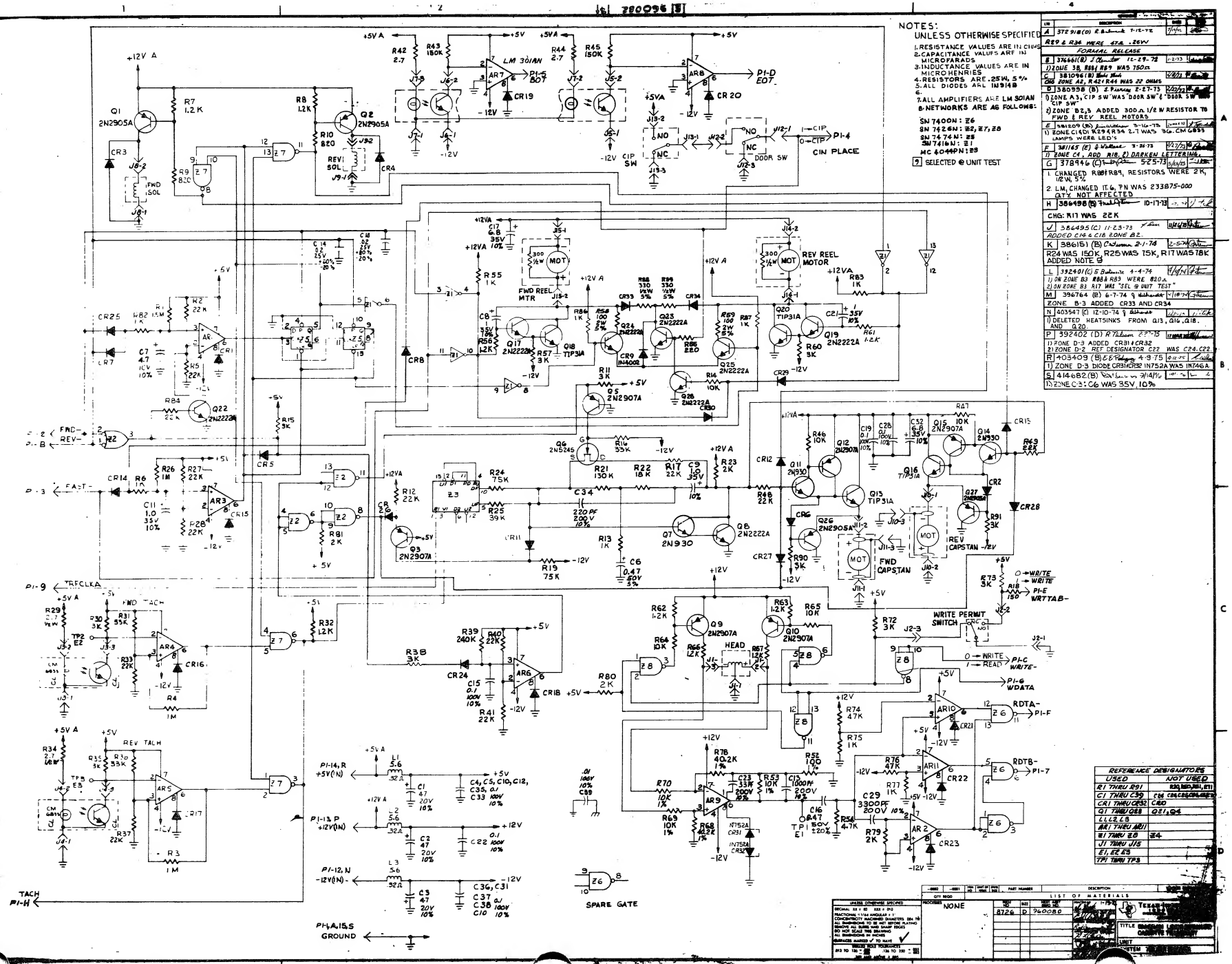
NOTES:
UNLESS OTHERWISE SPECIFIED
1. RESISTANCE VALUES ARE IN OHMS
2. CAPACITANCE VALUES ARE IN MICROFARADS
3. INDUCTANCE VALUES ARE IN MICROHENRIES
4. RESISTORS ARE .25W, 5%
5. ALL DIODES ARE IN914B
6.
7. ALL AMPLIFIERS ARE LM 301AN
8. NETWORKS ARE AS FOLLOWS:
SN 7400N : Z6
SN 7426N : Z2, Z7, Z8
SN 7474N : Z5
SN 7416N : Z1
MC 4044P1 : Z9
9 SELECTED @ UNIT TEST
FORMAL RELEASE
LM 301AN
REV REEL MOTOR
FWD REEL MTR
FWD CAPSTAN
REV CAPSTAN
FWD TACH
REV TACH
HEAD
WRITE PERMIT SWITCH
DOOR SW
CIP SW
SPARE GATE
PHASS GROUND
REFERENCE DESIGNATORS
NONE
LIST OF MATERIALS

C-26

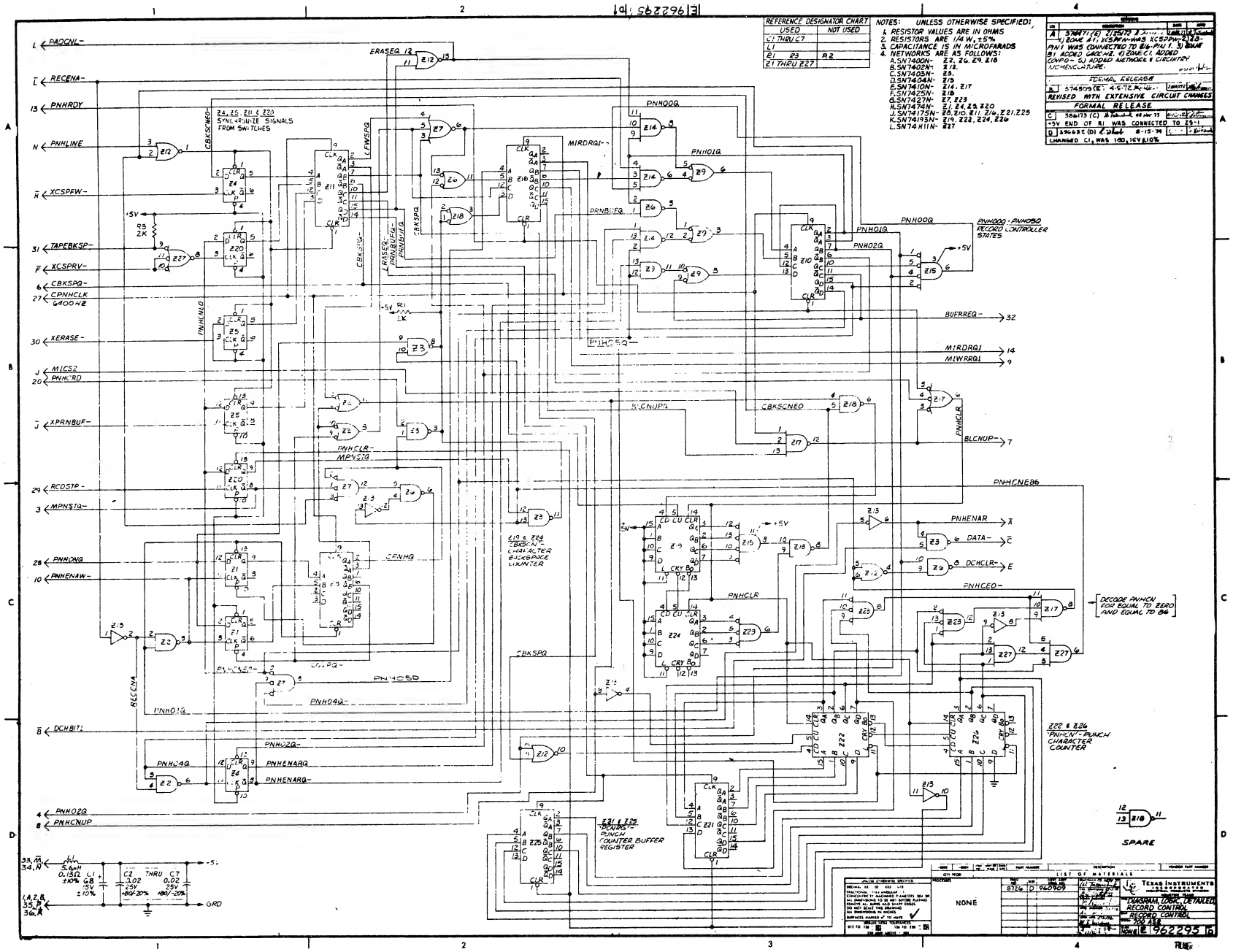
L BADCNL-
L RECENA-
13 PNHRDY
N PNHLINE
H XCSPEW-
31 TAPEBKSP-
F XCSPRV-
6 CBKSPQ-
27 CPNHCLK 6400 KHZ
30 XERASE-
J MICS2
20 PNHCRD
J XPRNBUF-
29 RCDSTP-
3 MPNSTQ-
28 PNHONQ
10 PNHENAW-
B DCHBIT1-
4 PNH02Q
8 PNHCNUP
33,M 34,N
1,A,Z,B 35,P 36,K
GRD
ERASEQ 12
Z12
Z24, Z5, Z11 & Z20 SYNCHRONIZE SIGNALS FROM SWITCHES
CBKSCNEO
CFWSPQ
CBKSPQ
CBKSCNQ
RAISE PRNBUFFQ PRNBUFFQ
PNH00Q
PNH01Q
PNH02Q
MIRDRQI-
PRNBUFFQ
PNH00Q - PNH08Q RECORD CONTROLLER STATES
BUFFREQ- 32
MIRDRQI 14
MIWRRQI 9
PNHCSQ
+5V
R1 1K
R3 2K
PNHCNUP
PNHCLR-MPNSTQ
CBKSCNEO
PNHCLR
BLCNUP- 7
PNHCNE86
PNHENAR
DATA-
DCHCLR-
PNHCEO-
DECODE PNHCN FOR EQUAL TO ZERO AND EQUAL TO 86
Z10 & Z24 "BKSP-N" CHARACTER BACKSPACE COUNTER
Z22 & Z26 "PN-CN" PUNCH CHARACTER COUNTER
Z31 & Z25 "PNCNB-" PUNCH COUNTER BUFFER REGISTER
SPARE
L1 5.6 uH 0.13Ω ±10% 15V ±10%
C1 THRU C7 0.02 25V +80/-20%
REFERENCE DESIGNATOR CHART
USED: C1 THRU C7; L1; R1, R3; Z1 THRU Z27
NOT USED: R2
NOTES: UNLESS OTHERWISE SPECIFIED:
1. RESISTOR VALUES ARE IN OHMS
2. RESISTORS ARE 1/4 W, ±5%
3. CAPACITANCE IS IN MICROFARADS
4. NETWORKS ARE AS FOLLOWS:
A.SN7400N- Z2, Z6, Z9, Z18
B.SN7402N- Z13
C.SN7403N- Z8
D.SN7404N- Z15
E.SN7410N- Z16, Z17
F.SN7425N- Z19
G.SN7427N- Z7, Z23
H.SN7474N- Z1, Z4, Z5, Z20
J.SN74175N- Z6, Z10, Z11, Z16, Z21, Z25
K.SN74193N- Z19, Z22, Z24, Z26
L.SN74H11N- Z27
FORMAL RELEASE
REVISED WITH EXTENSIVE CIRCUIT CHANGES
NONE
TEXAS INSTRUMENTS
DIAGRAM, LOGIC, DETAILED, RECORD CONTROL
962295 D

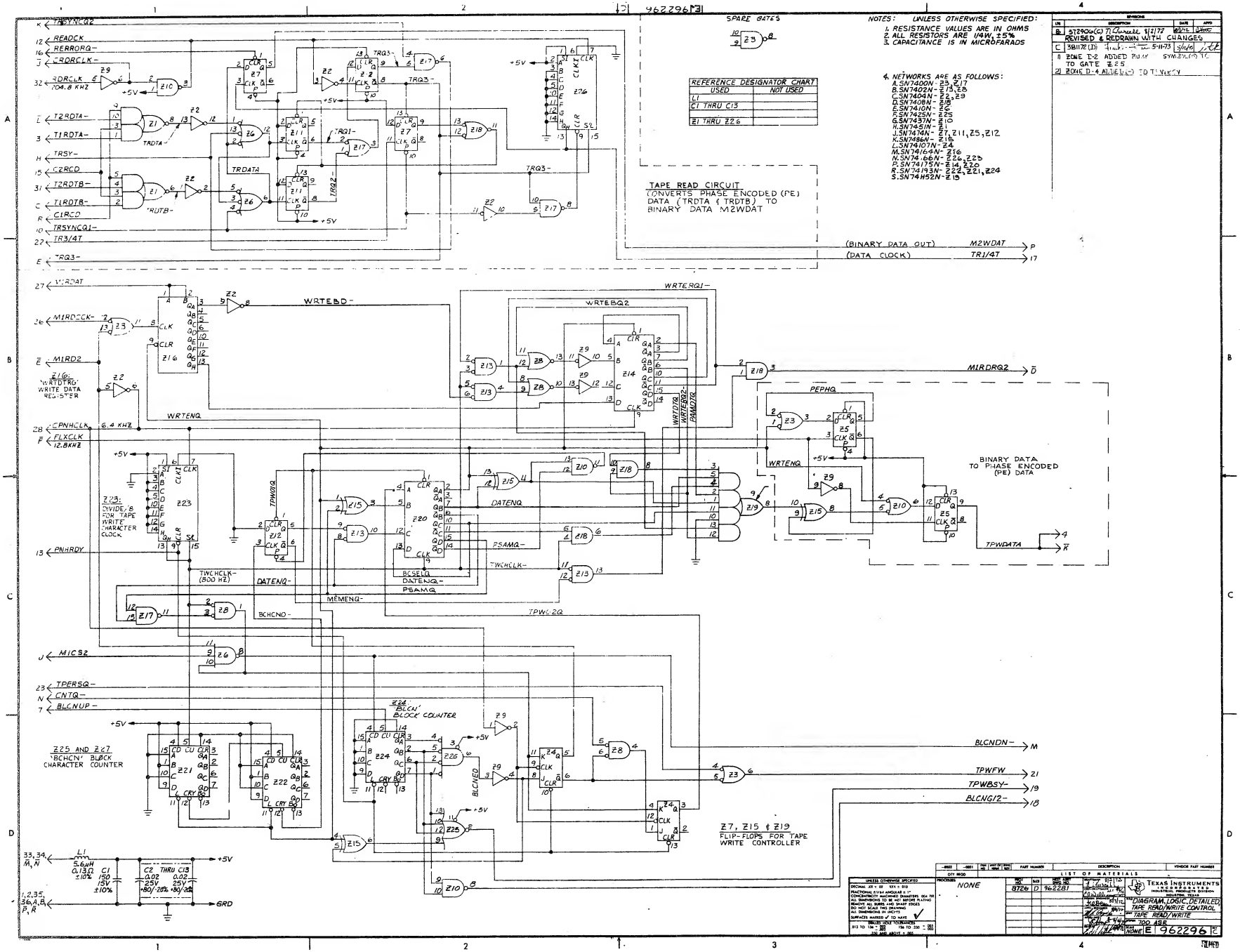
962296-31
SPARE GATES
NOTES: UNLESS OTHERWISE SPECIFIED:
1. RESISTANCE VALUES ARE IN OHMS
2. ALL RESISTORS ARE 1/4W, ±5%
3. CAPACITANCE IS IN MICROFARADS
4. NETWORKS ARE AS FOLLOWS:
A.SN7400N-Z3,Z17
B.SN7402N-Z13,Z8
C.SN7404N-Z2,Z9
D.SN7408N-Z18
E.SN7410N-Z6
F.SN7425N-Z5
G.SN7437N-Z10
H.SN7451N-Z1
J.SN7474N-Z7,Z11,Z5,Z12
K.SN7486N-Z15
L.SN74107N-Z4
M.SN74164N-Z16
N.SN74166N-Z26,Z23
P.SN74175N-Z14,Z20
R.SN74193N-Z22,Z21,Z24
S.SN74H52N-Z19
REFERENCE DESIGNATOR CHART
USED / NOT USED
L1
C1 THRU C13
Z1 THRU Z26
TAPE READ CIRCUIT
CONVERTS PHASE ENCODED (PE) DATA (TRDTA & TRDTB) TO BINARY DATA M2WDAT
(BINARY DATA OUT) M2WDAT
(DATA CLOCK) TR1/4T
WRITE DATA REGISTER
Z23: DIVIDE BY 8 FOR TAPE WRITE CHARACTER CLOCK
6.4 KHZ
12.8KHZ
BINARY DATA TO PHASE ENCODED (PE) DATA
TPWDATA
Z25 AND Z27 'BCHCN' BLOCK CHARACTER COUNTER
Z24 'BLCN' BLOCK COUNTER
Z7, Z15 & Z19 FLIP-FLOPS FOR TAPE WRITE CONTROLLER
L1 5.6uH 0.13Ω ±10%
C1 150 15V ±10%
C2 THRU C13 .02 25V +80/-20%
GRD
LIST OF MATERIALS
NONE
TEXAS INSTRUMENTS INCORPORATED
INDUSTRIAL PRODUCTS DIVISION
DIAGRAM, LOGIC, DETAILED
TAPE READ/WRITE CONTROL
TAPE READ/WRITE
962296

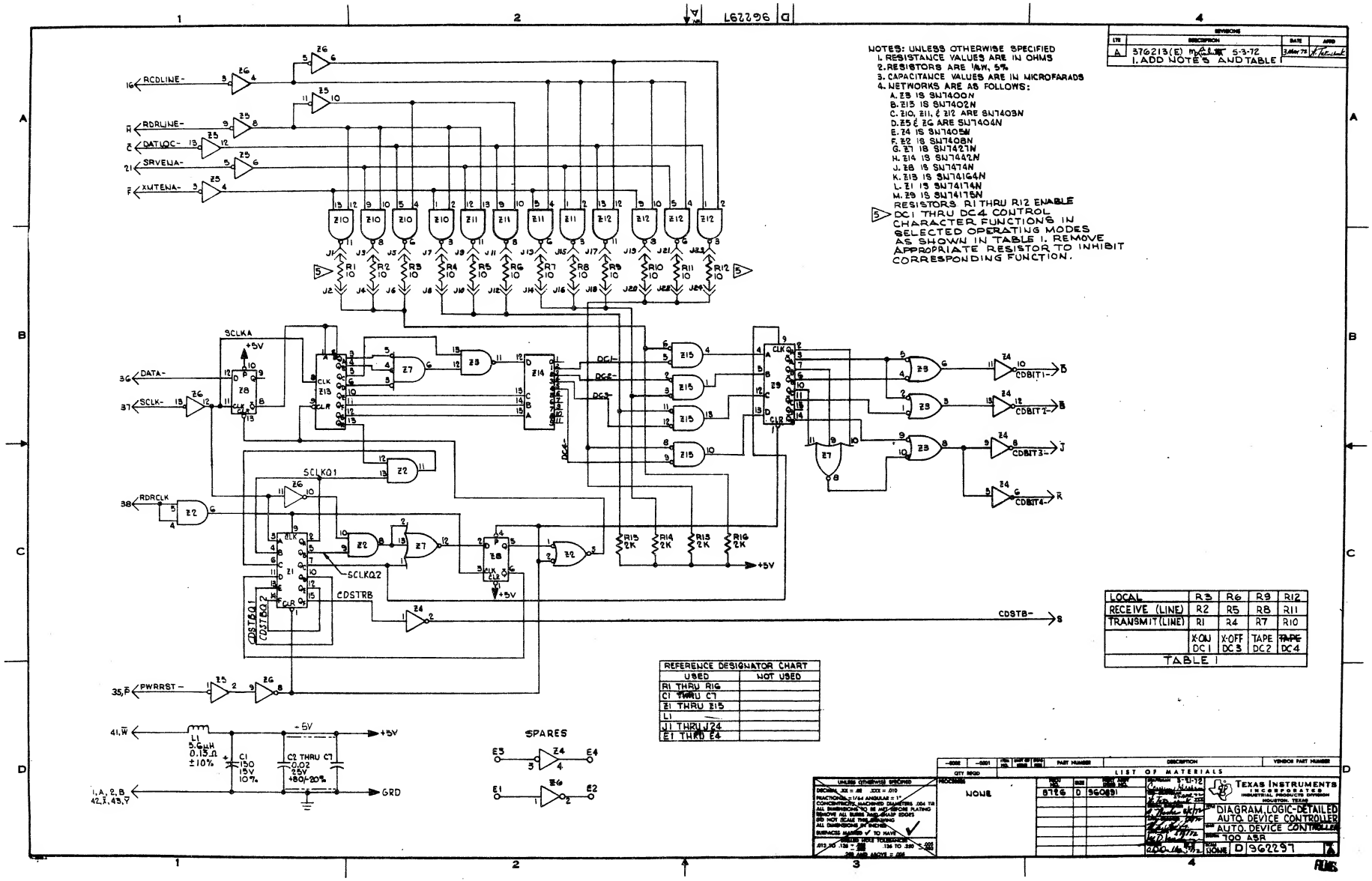

NOTES: UNLESS OTHERWISE SPECIFIED
1. RESISTANCE VALUES ARE IN OHMS
2. RESISTORS ARE 1/4W, 5%
3. CAPACITANCE VALUES ARE IN MICROFARADS
4. NETWORKS ARE AS FOLLOWS:
A. Z3 IS SN7400N
B. Z15 IS SN7402N
C. Z10, Z11, & Z12 ARE SN7403N
D. Z5 & Z6 ARE SN7404N
E. Z4 IS SN7405N
F. Z2 IS SN7408N
G. Z7 IS SN7427N
H. Z14 IS SN7442N
J. Z8 IS SN7474N
K. Z13 IS SN74164N
L. Z1 IS SN74174N
M. Z9 IS SN74175N
RESISTORS R1 THRU R12 ENABLE DC1 THRU DC4 CONTROL CHARACTER FUNCTIONS IN SELECTED OPERATING MODES AS SHOWN IN TABLE 1. REMOVE APPROPRIATE RESISTOR TO INHIBIT CORRESPONDING FUNCTION.

LTR	DESCRIPTION	DATE	APPD
A	376213(E) 5-3-72 1. ADD NOTES AND TABLE	3 Mar 72	

LOCAL	R3	R6	R9	R12
RECEIVE (LINE)	R2	R5	R8	R11
TRANSMIT (LINE)	R1	R4	R7	R10
	X-ON DC1	X-OFF DC3	TAPE DC2	~~TAPE~~ DC4

TABLE 1

REFERENCE DESIGNATOR CHART	
USED	NOT USED
R1 THRU R16	
C1 THRU C7	
Z1 THRU Z15	
L1	
J1 THRU J24	
E1 THRU E4	

LIST OF MATERIALS

QTY REQD	PART NUMBER	DESCRIPTION	VENDOR PART NUMBER
NONE	8726 D 960891		

TEXAS INSTRUMENTS INCORPORATED INDUSTRIAL PRODUCTS DIVISION HOUSTON, TEXAS

DIAGRAM, LOGIC-DETAILED AUTO. DEVICE CONTROLLER

AUTO. DEVICE CONTROLLER

700 ASR

NONE D 962297

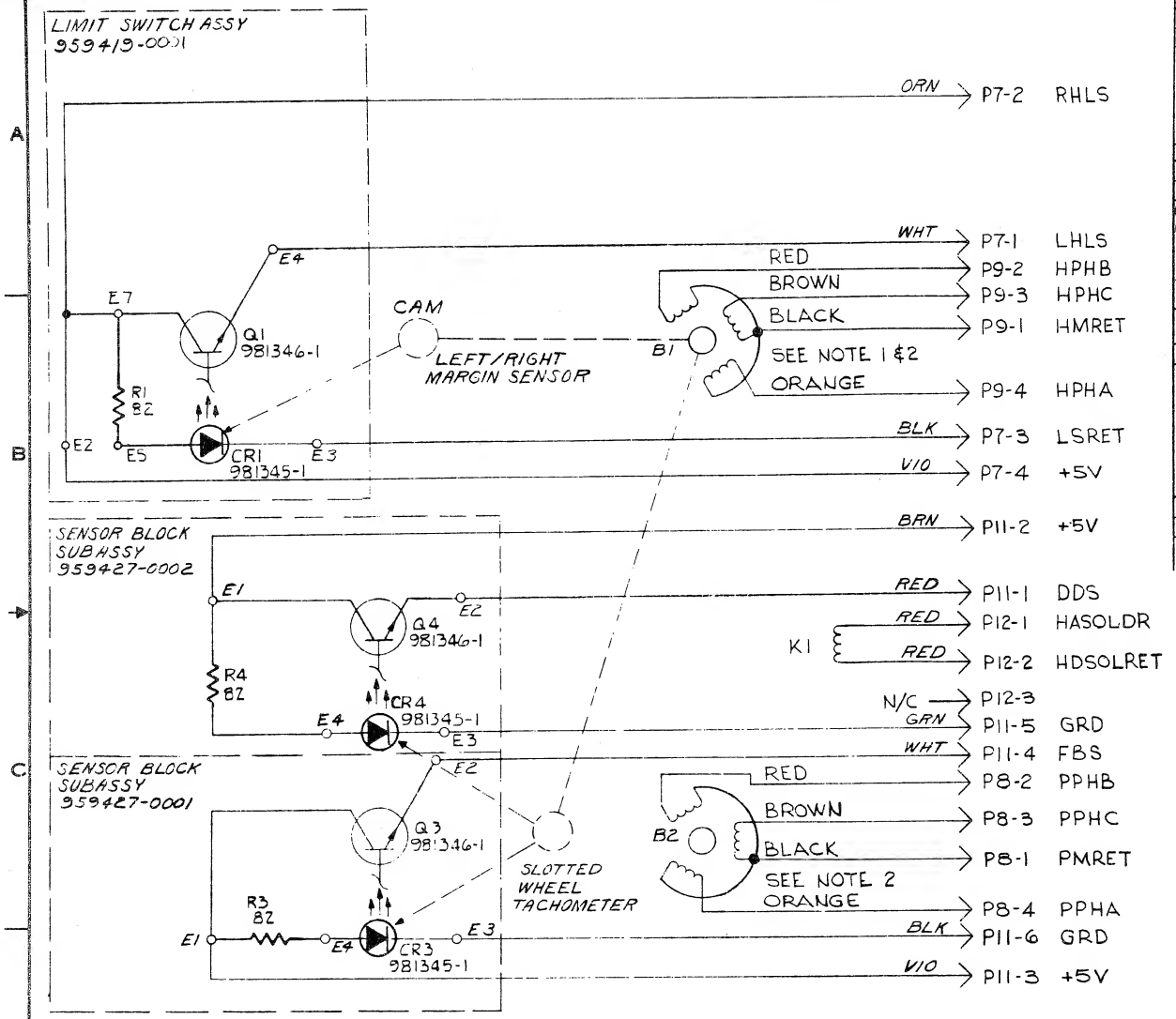

REVISIONS			
LTR	DESCRIPTION	DATE	APPD
A	380685 (B) J Piercy 3-19-73 1) Q1 THRU Q4 WERE "CLT-2160" 2) DELETED R1 THRU R4 (WERE 75Ω, 1/4 W, 1%) 3) DELETED NOTES 3 & 4. 4) DS1 WAS CR2, DS2 WAS CR1, DS3 WAS CR3, DS4 WAS CR4 5) ADDED: E7	3/21/73	S. Scott
B	392410(D) M.W.K. 6/19/74 1) 2 ONES A1, B1: DELETED Q2, DS2, E1, E2 AND E6 FROM LIMIT SWITCH ASSY	6/19/74	G. Hitchcock
C	403405 (C) 11-19-74 G. Hitchcock-DR (1) ADDED NOTES 3 & 4. (2) CHG ASA 7153 WAS CM6833. (3) ADDED: E2, RESISTORS BETWEEN E5 & E7, BETWEEN E1 & E4 ZONE C-1, AND BETWEEN E1 & E4 ZONE D-1. 4. DELETE CONNECTION BETWEEN E2 AND E5.	11/19/74	J. T. K.
D	403591 (D) R. J. Wilson 1-19-75 1) VALUES FOR RESISTORS BETWEEN E5 & E7 AND E1 & E4 (2 PLACES) WAS 27Ω.	1/19/75	J. T. K.
E	403498 (B) 1-27-75 G. Hitchcock-DR 1. NOTE 4 CHG .25W WAS .5W 2. ADDED SHEET 2. 3 ON SH 1 CHG THE FOLLOWING R1 WAS 22Ω, Q1 WAS TIL 81, CR1 WAS DS1-CM6833, R4 WAS 22Ω, Q4 WAS TIL 81, CR4 WAS DS4-ASA 7153, R3 WAS 22Ω Q3 WAS TIL 81 CR3 WAS DS3-CM6833.	1/27/75	J. T. K.
F	392124 (D) K. Wheet 5-9-75 ADDED NOTE 5.	12/MAY/75	[illegible]

NOTES:
1. FOR CLOCKWISE ROTATION STEPPING MODE, FOLLOW SEQUENCE ORANGE, RED AND BROWN
2. FOR CCW ROTATION SLEW OR PAPER ADVANCE MODE, FOLLOW SEQUENCE ORANGE, BROWN AND RED
~~3. RESISTOR VALUES ARE IN OHMS~~
~~4. RESISTORS ARE 1/4 W, 1%~~
3. RESISTOR VALUES ARE IN OHMS
4. RESISTORS ARE .25W, 5%.
5. ON SOME UNITS, Q1 & CR1, Q3 & CR3, AND/OR Q4 & CR4 ARE REPLACED WITH OPTICAL SWITCH, TI P/N 986355-0001

-0002	-0001	ITEM NO.	UNIT OF ISSUE	DWG SIZE	PART NUMBER	DESCRIPTION	VENDOR PART NUMBER
QTY REQD					LIST OF MATERIALS		

UNLESS OTHERWISE SPECIFIED
DECIMAL XX ± .02 XXX ± .010
FRACTIONAL ± 1/64 ANGULAR ± 1°
CONCENTRICITY MACHINED DIAMETERS .004 TIR
ALL DIMENSIONS TO BE MET BEFORE PLATING
REMOVE ALL BURRS AND SHARP EDGES
DO NOT SCALE THIS DRAWING
ALL DIMENSIONS IN INCHES
SURFACES MARKED ✓ TO HAVE ✓
DRILLED HOLE TOLERANCES
.013 TO .136 ± .003 / .002 — .136 TO .250 ± .005 / .003 — .250 AND ABOVE ± .005

PROCESSES: NONE

PROJ NO.	SIZE	NEXT ASSY DWG NO.
8726	E	959391

DRAFTSMAN 2 FEB 72 M. C. Dewitt
CKD-DRAFTSMAN 5/9/72
DESIGN ENGINEER 5-7-72
APPD-ENGINEER 5/12/72
APPD-MFG 5/12/72
RELEASE 5-12-72

TEXAS INSTRUMENTS INCORPORATED
INDUSTRIAL PRODUCTS DIVISION
HOUSTON, TEXAS

TITLE: DIAGRAM, ELECTRONIC SCHEMATIC - DRIVE ASSY
UNIT: DRIVE MECHANISM
SYSTEM: 700 ASR
SCALE: NONE | C | 962299 | REV F

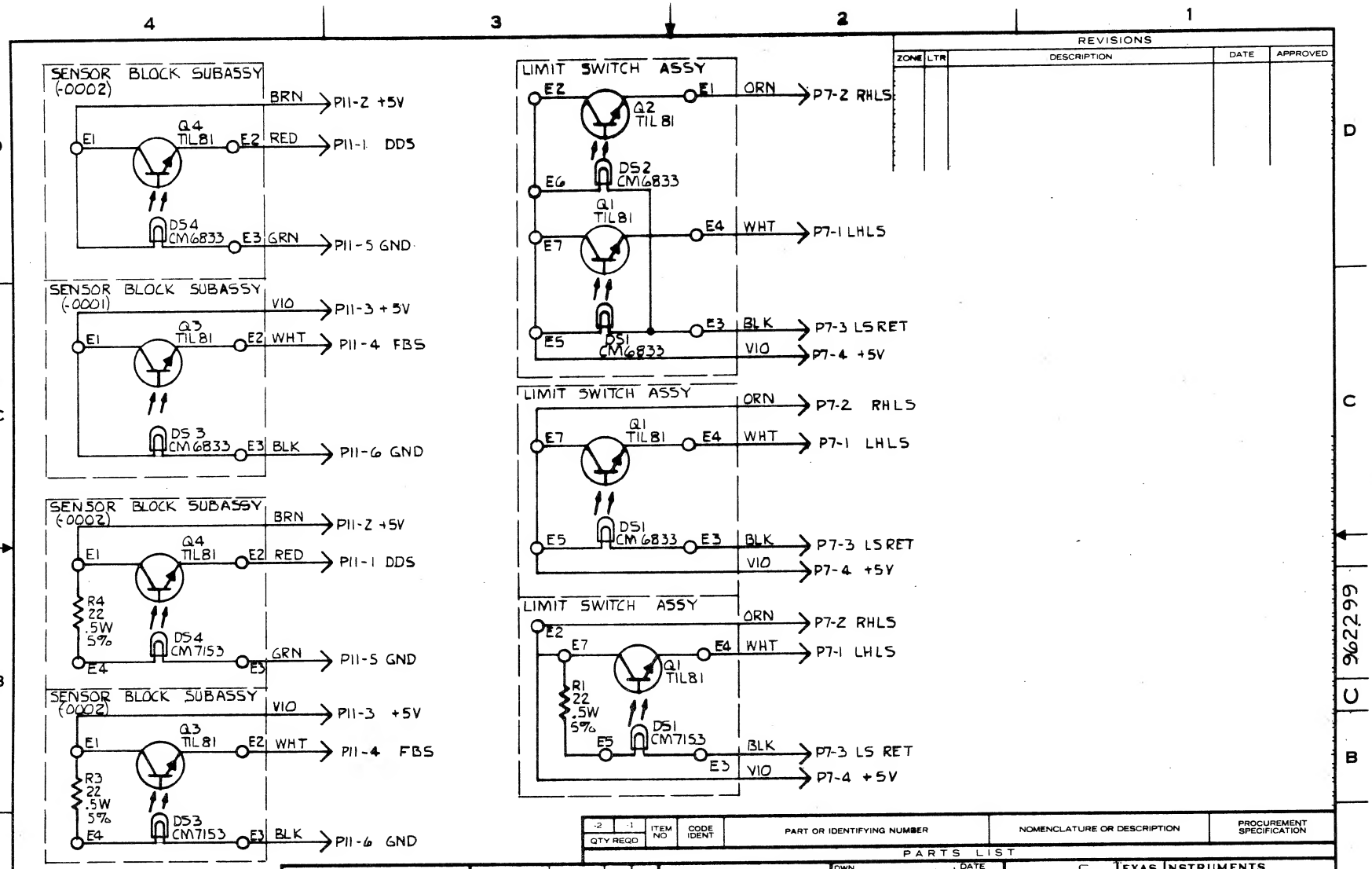

REVISIONS

ZONE	LTR	DESCRIPTION	DATE	APPROVED

QTY REQD	ITEM NO	CODE IDENT	PART OR IDENTIFYING NUMBER	NOMENCLATURE OR DESCRIPTION	PROCUREMENT SPECIFICATION

PARTS LIST

UNLESS OTHERWISE SPECIFIED
- REMOVE ALL BURRS AND SHARP EDGES
- CONCENTRICITY MACHINED DIAMETERS .010 FIR
- DIMENSIONAL LIMITS APPLY BEFORE FINISH PROCESSING
- IDENTIFYING NUMBERS SHOWN IN PARENTHESES FOR REFERENCE ONLY
- INTERPRET DRAWING IN ACCORDANCE WITH MIL-STD-100

HOLE TOLERANCE

.013 THRU .125 +.004 −.001	.126 THRU .250 +.006 −.001	.251 THRU .500 +.008 −.001
.501 THRU .750 +.008 −.001	.751 THRU 1.000 +.010 −.001	1.001 THRU 2.000 +.012 −.001

8726

NEXT ASSY | USED ON

APPLICATION

UNLESS OTHERWISE SPECIFIED
- DIMENSIONS ARE IN INCHES
- TOLERANCES: ANGLES ± 1° 3 PLACE DECIMALS ± .010 2 PLACE DECIMALS ± .02

DWN	DATE 1/27/75
CHK	
ENGR	
QA	
APVD	
CONTR NO	
DESIGN ACTIVITY RELEASE	

TEXAS INSTRUMENTS INCORPORATED
Equipment Group Dallas, Texas

DIAGRAM ELECTRONIC
SCHEMATIC - DRIVE ASSY

SIZE	CODE IDENT NO	DRAWING NO
C	96214	962299

SCALE NONE | REV F | SHEET 2

962299

C-31

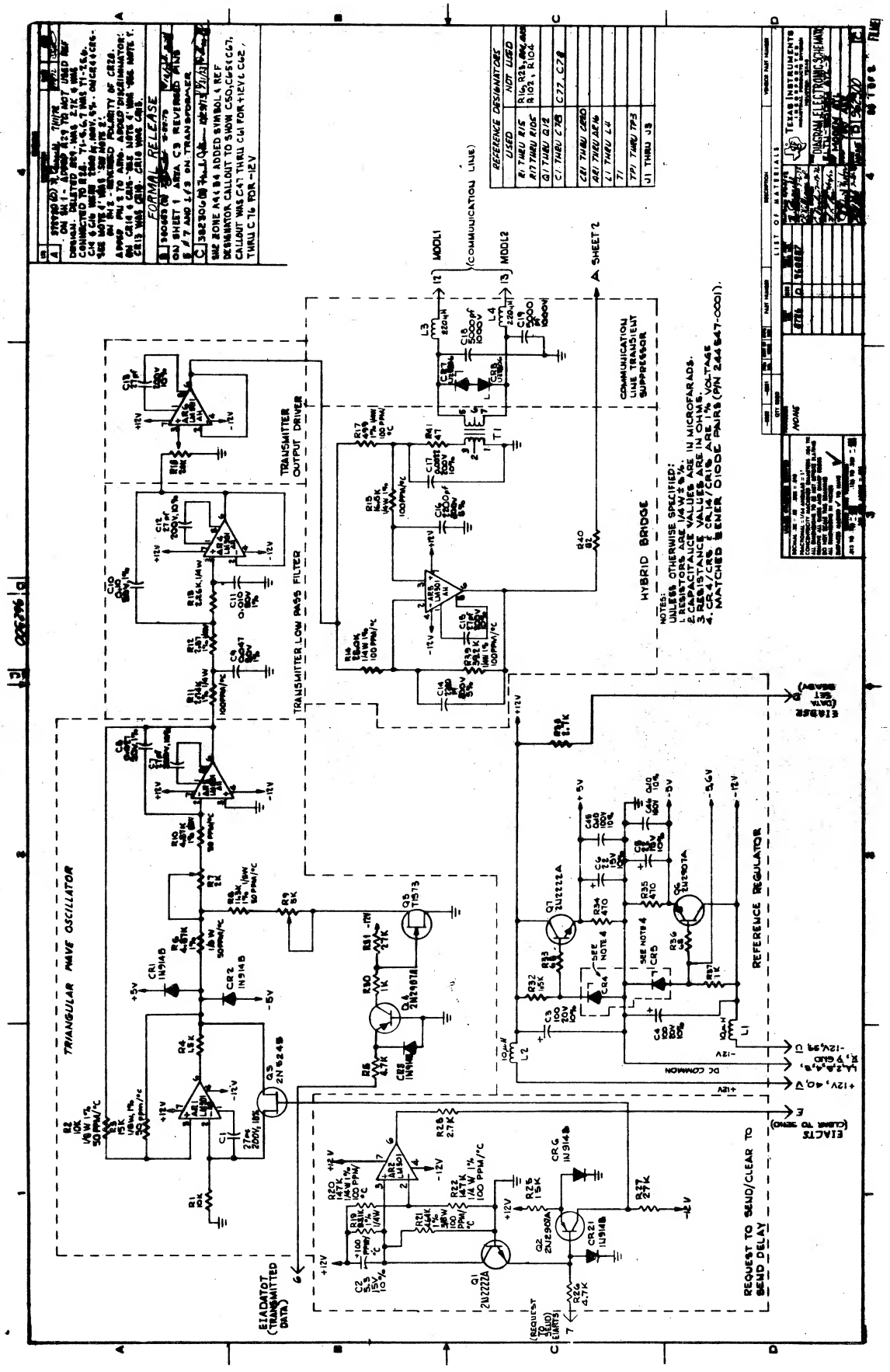
TRIANGULAR WAVE OSCILLATOR
TRANSMITTER LOW PASS FILTER
TRANSMITTER OUTPUT DRIVER
HYBRID BRIDGE
COMMUNICATION LINE TRANSIENT SUPPRESSOR
REFERENCE REGULATOR
REQUEST TO SEND/CLEAR TO SEND DELAY
EIADATOT (TRANSMITTED DATA)
EIACTS (CLEAR TO SEND)
EIASER (DATA SET READY)
DC COMMON
MODL1
MODL2
(COMMUNICATION LINE)
SHEET 2
FORMAL RELEASE
REFERENCE DESIGNATORS
USED
NOT USED
TEXAS INSTRUMENTS
DIAGRAM ELECTRONIC SCHEMATIC

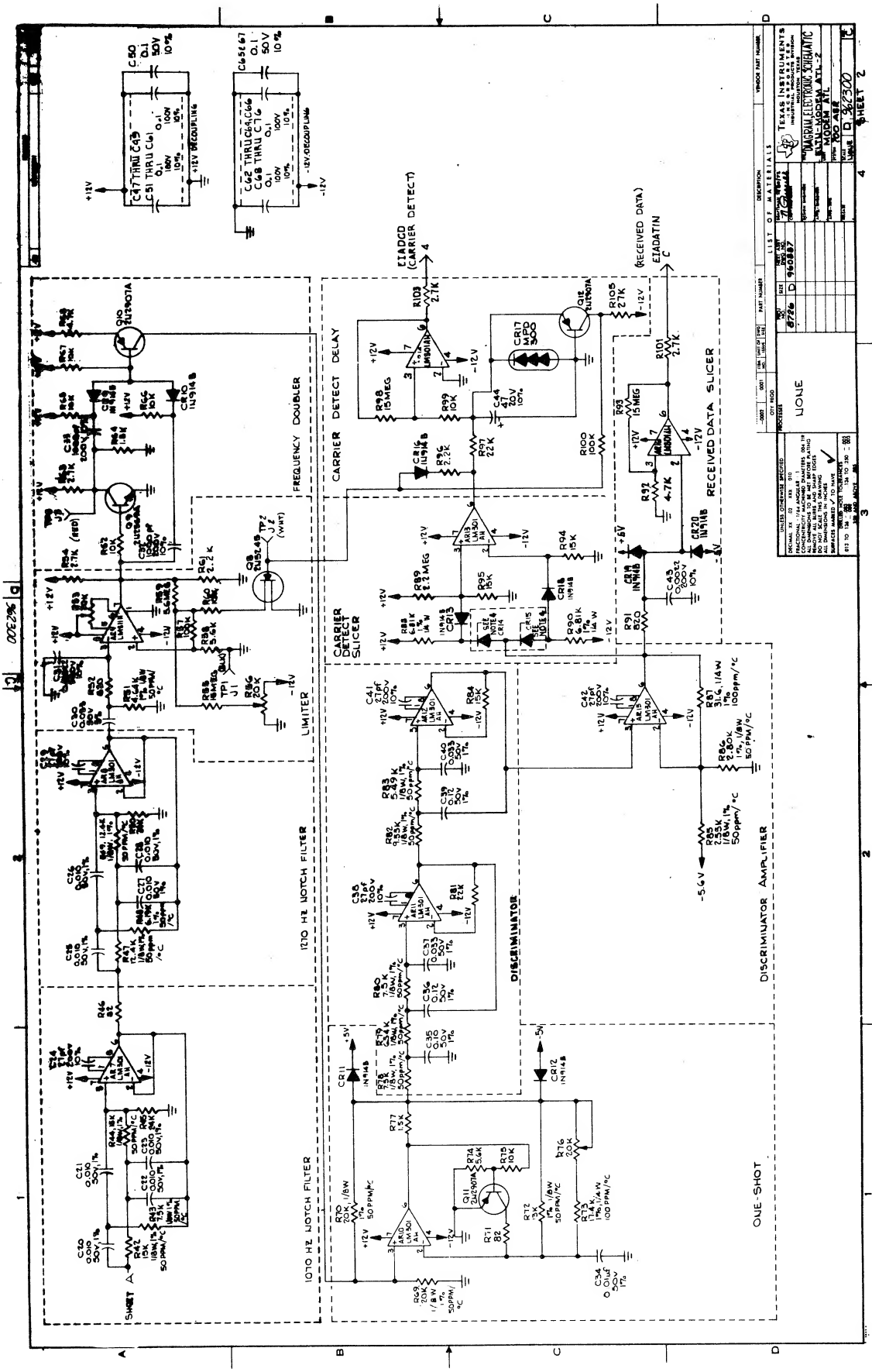

FREQUENCY DOUBLER
LIMITER
1270 HZ NOTCH FILTER
1070 HZ NOTCH FILTER
CARRIER DETECT DELAY
CARRIER DETECT SLICER
DISCRIMINATOR
RECEIVED DATA SLICER
DISCRIMINATOR AMPLIFIER
ONE-SHOT
EIADCD (CARRIER DETECT)
EIADATIN (RECEIVED DATA)
TEXAS INSTRUMENTS
DIAGRAM, ELECTRONIC SCHEMATIC
ELTN-MODEM ATL-2
MODEM ATL
700 ASR
SHEET 2
NONE

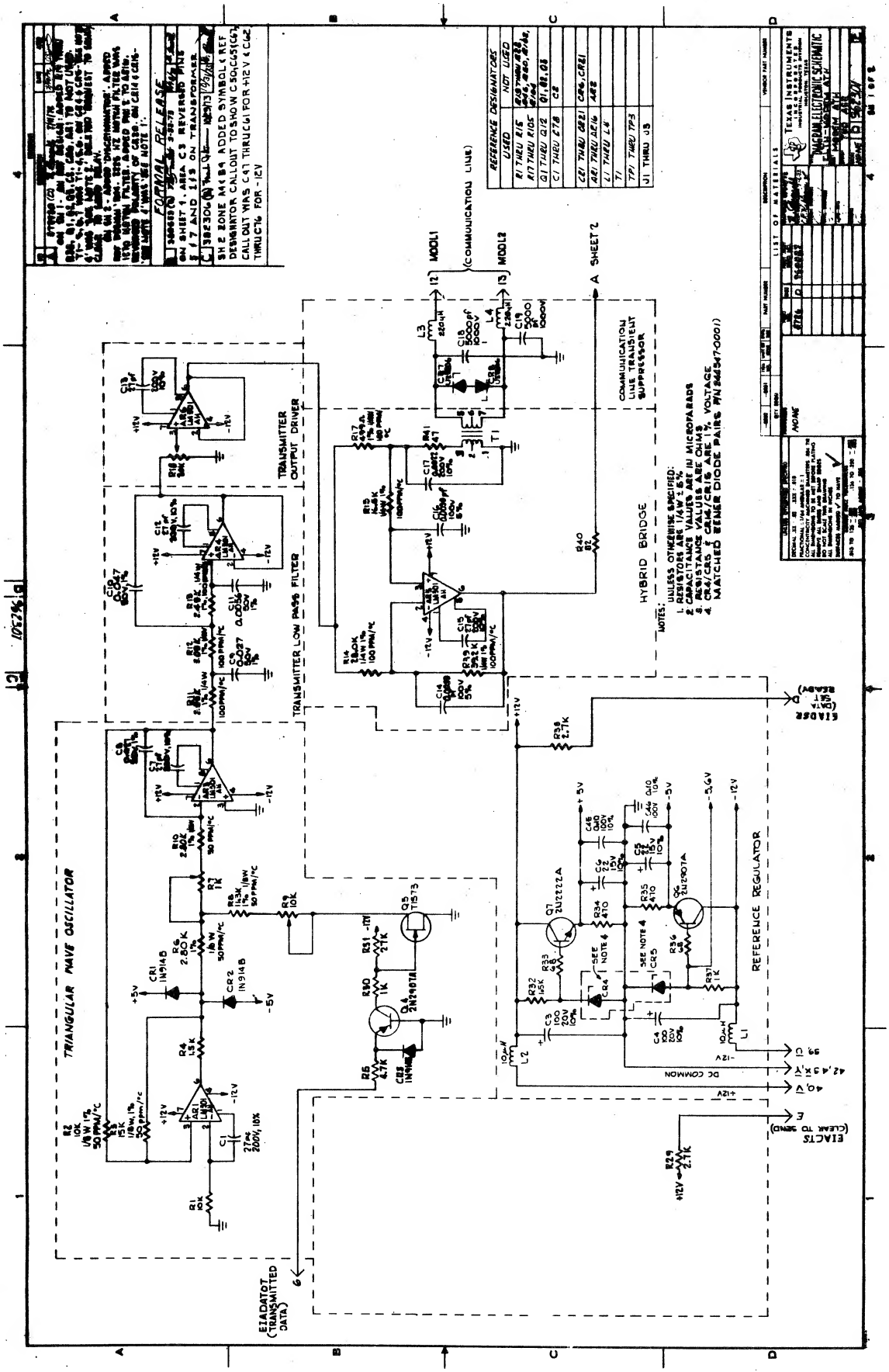
TRIANGULAR WAVE OSCILLATOR
TRANSMITTER LOW PASS FILTER
TRANSMITTER OUTPUT DRIVER
HYBRID BRIDGE
COMMUNICATION LINE TRANSIENT SUPPRESSOR
REFERENCE REGULATOR
MODL1
MODL2
(COMMUNICATION LINE)
A SHEET 2
EIADSR (DATA SET READY)
EIACTS (CLEAR TO SEND)
EIADATOT (TRANSMITTED DATA)
DC COMMON
NOTES:
UNLESS OTHERWISE SPECIFIED:
1. RESISTORS ARE 1/4W ± 5%
2. CAPACITANCE VALUES ARE IN MICROFARADS
3. RESISTANCE VALUES ARE OHMS
4. CR4/CR5 & CR14/CR16 ARE 1% VOLTAGE MATCHED ZENER DIODE PAIRS P/N 2445470001)
REFERENCE DESIGNATORS
USED
NOT USED
TEXAS INSTRUMENTS
DIAGRAM ELECTRONIC SCHEMATIC
LIST OF MATERIALS
FORMAL RELEASE

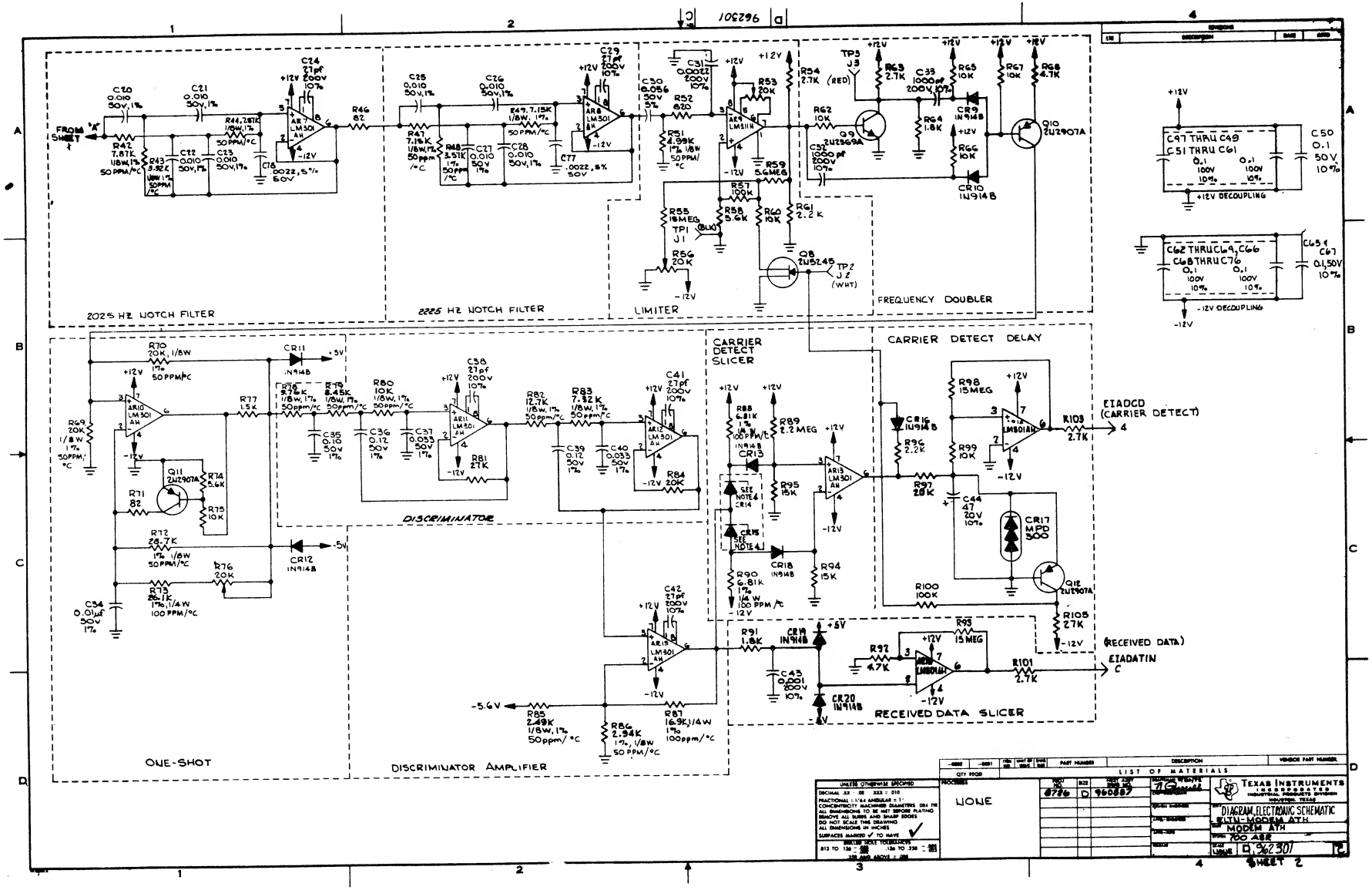
2025 HZ NOTCH FILTER
2225 HZ NOTCH FILTER
LIMITER
FREQUENCY DOUBLER
+12V DECOUPLING
-12V DECOUPLING
CARRIER DETECT SLICER
CARRIER DETECT DELAY
DISCRIMINATOR
ONE-SHOT
DISCRIMINATOR AMPLIFIER
RECEIVED DATA SLICER
EIADCD (CARRIER DETECT)
EIADATIN (RECEIVED DATA)
FROM SHEET 'A'
LIST OF MATERIALS
DIAGRAM, ELECTRONIC SCHEMATIC
ELTN-MODEM, ATH
MODEM ATH
700 482
SHEET 2

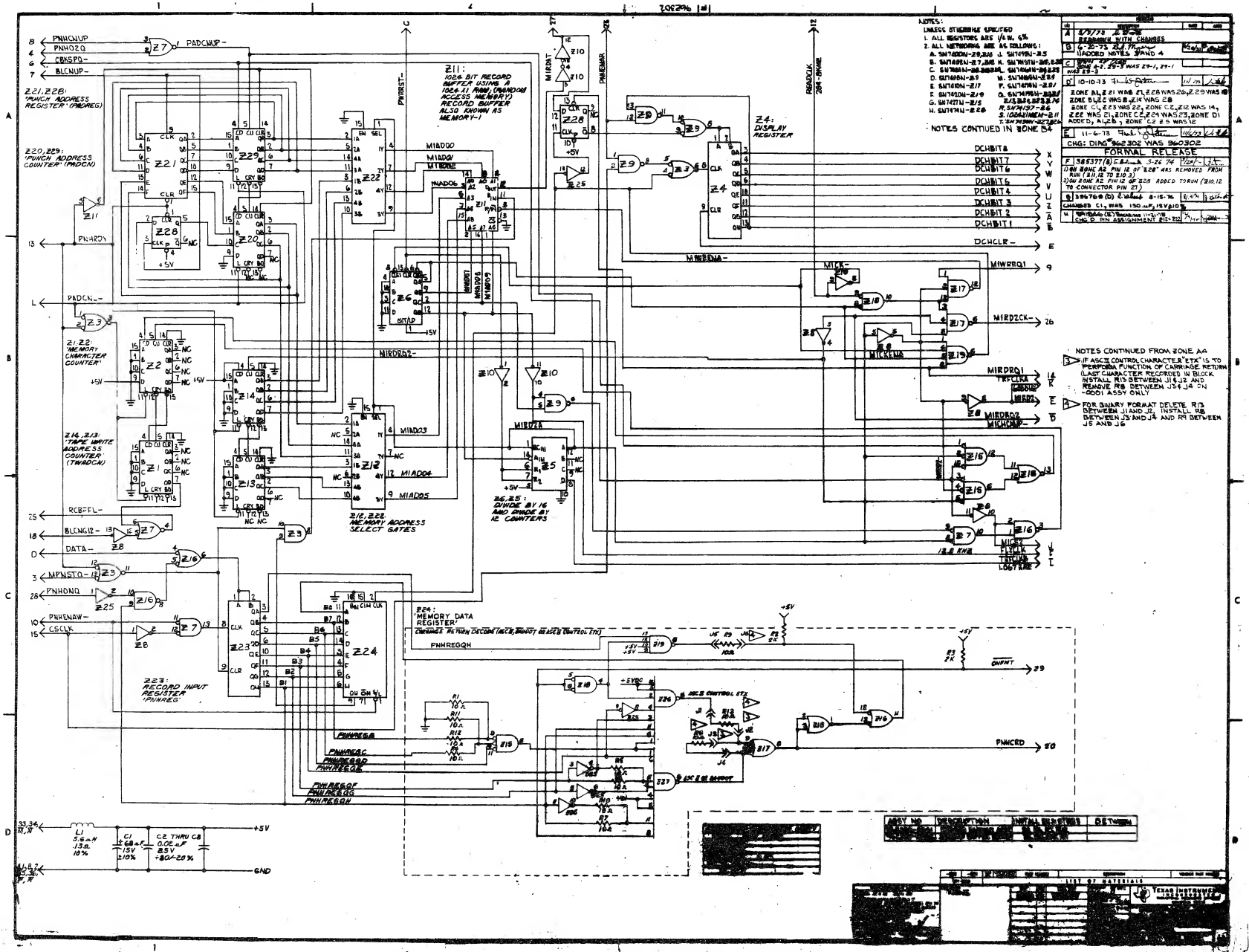
NOTES:
UNLESS OTHERWISE SPECIFIED
1. ALL RESISTORS ARE 1/4 W, 6%
2. ALL METRONOMS ARE AS FOLLOWS:
A. SN74000N-29,Z16 J. SN74191N-Z5
B. SN74000N-Z7,Z16 K. SN74157N-Z15,Z20
C. SN74000N-Z8,Z16 L. SN74161N-Z4,Z23
D. SN74000N-Z9 M. SN74161N-Z25
E. SN74100N-Z17 P. SN74174N-Z21
F. SN74200N-Z19 Q. SN74175N-Z22,Z23,Z24,Z25,Z26
G. SN74271N-Z15 R. SN74157-Z6
H. SN74741N-Z28 S. 1024X1MEM-Z11
T. SN74300N-Z27,Z26
NOTES CONTINUED IN ZONE B4
A 5/9/73 REDRAWN WITH CHANGES
B 6-20-73 ADDED NOTES 3 AND 4
C ZONE A-2, Z9-3 WAS Z9-1, Z9-1 WAS Z9-3
D 10-10-73
ZONE A1, Z21 WAS Z1, Z28 WAS Z6, Z29 WAS 10
ZONE B1, Z2 WAS B, Z14 WAS Z8
ZONE C1, Z23 WAS Z2, ZONE C2, Z12 WAS 14, Z22 WAS 21, ZONE C2, Z24 WAS Z3, ZONE D1 ADDED, A1, Z8, ZONE C2 Z5 WAS 12
E 11-6-73
CHG: DIAG 962302 WAS 960302
FORMAL RELEASE
F 385377(B) 3-26-74
1) ON ZONE A2 PIN 12 OF "Z28" WAS REMOVED FROM RUN (Z11, 12 TO Z10 3)
2) ON ZONE A2 PIN 12 OF Z28 ADDED TO RUN (Z10, 12 TO CONNECTOR PIN 27)
G 396769 (D) 8-15-74
CHANGED C1, WAS 150 uF, 15V ±10%
H CHG D PIN ASSIGNMENT Z12 & Z22
NOTES CONTINUED FROM ZONE A4
3 IF ASCII CONTROL CHARACTER "ETX" IS TO PERFORM FUNCTION OF CARRIAGE RETURN (LAST CHARACTER RECORDED IN BLOCK INSTALL R13 BETWEEN J1 & J2 AND REMOVE R8 BETWEEN J3 & J4 ON -0001 ASSY ONLY
4 FOR BINARY FORMAT DELETE R13 BETWEEN J1 AND J2, INSTALL R8 BETWEEN J3 AND J4 AND R9 BETWEEN J5 AND J6
Z11: 1024 BIT RECORD BUFFER USING A 1024 X1 RAM, (RANDOM ACCESS MEMORY) RECORD BUFFER ALSO KNOWN AS MEMORY-1
Z4: DISPLAY REGISTER
Z21, Z28: 'PUNCH ADDRESS REGISTER' (PADREG)
Z20, Z29: 'PUNCH ADDRESS COUNTER' (PADCN)
Z1, Z2: 'MEMORY CHARACTER COUNTER'
Z14, Z13: 'TAPE WRITE ADDRESS COUNTER' (TWADCN)
Z12, Z22: MEMORY ADDRESS SELECT GATES
Z6, Z5: DIVIDE BY 16 AND DIVIDE BY 12 COUNTERS
Z24: 'MEMORY DATA REGISTER'
Z23: RECORD INPUT REGISTER 'PNHREG'
PNHCNUP
PNHO2Q
CBKSPQ-
BLCNUP-
PADCNUP-
PNHRDY
PADCN-
RCBFFL-
BLCNG12-
DATA-
MPNSTQ-
PNHONQ
PNHENAW-
CSCLK
PWRRST-
MIRDAT
PNHEMAR
READCLK
DCHBIT8
DCHBIT7
DCHBIT6
DCHBIT5
DCHBIT4
DCHBIT3
DCHBIT2
DCHBIT1
DCHCLR-
MIWRRQ1
MIRD2CK-
MIRDRQ1
MIRDRQ2
MICHCNP-
MIWRENA-
MICK-
MICKENA
MIRDRQ2-
MIRD2A
MIAD00
MIAD01
MIAD02
MIAD03
MIAD04
MIAD05
MIAD06
MIAD07
MIAD08
MIAD09
PNHREGQH
PNHREGB
PNHREGC
PNHREGQD
PNHREGQE
PNHREGQF
PNHREGQG
PNHREGQH
CHFNT
PNHCRD
+5V
GND
L1 5.6 uH .13 Ω 10%
C1 68 uF 15V ±10%
C2 THRU C8 0.02 uF 25V +80/-20%
ASSY NO
DESCRIPTION
INSTALL RESISTORS
BETWEEN
LIST OF MATERIALS
TEXAS INSTRUMENTS

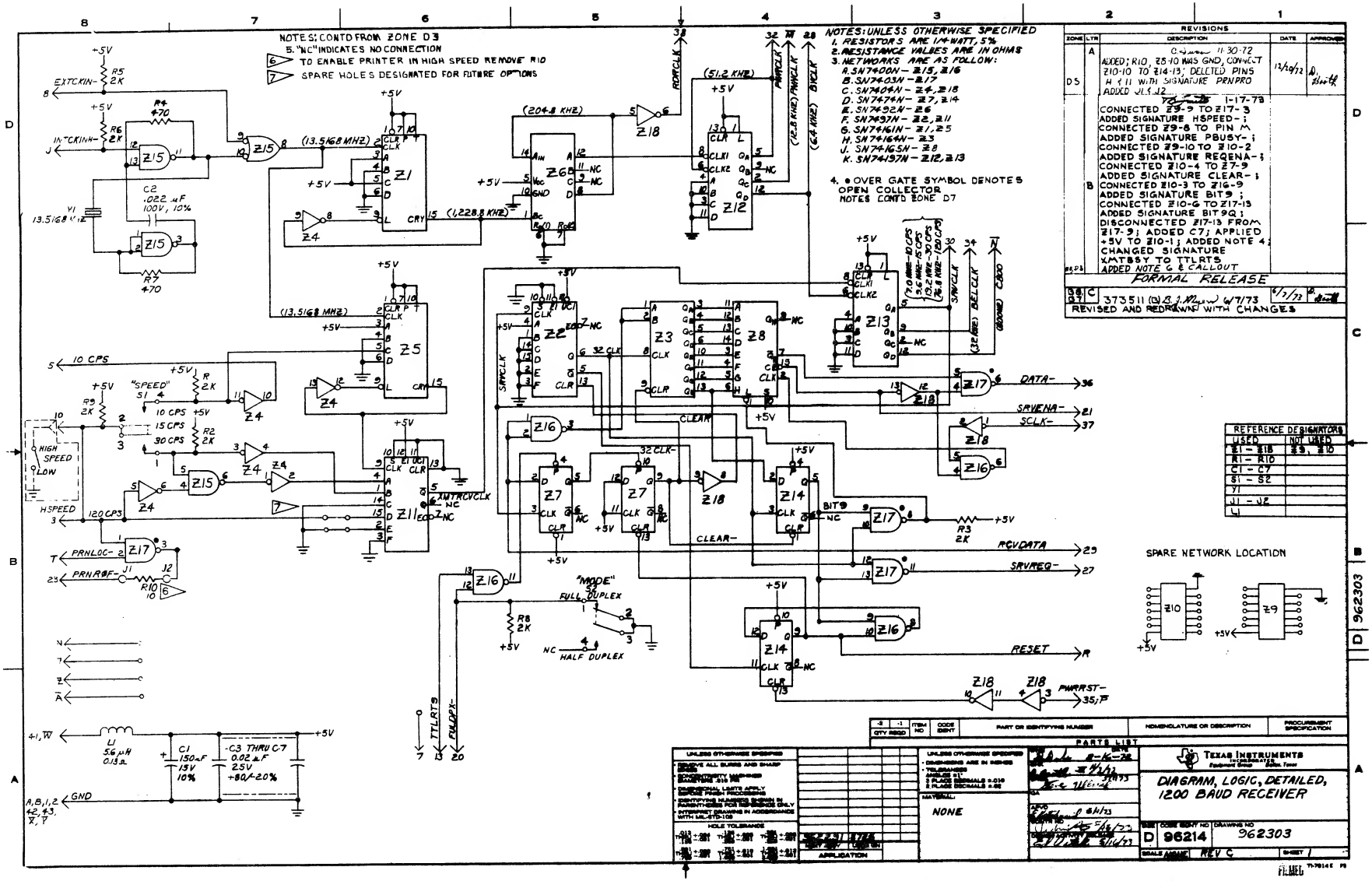
NOTES: CONTD FROM ZONE D3
5. "NC" INDICATES NO CONNECTION
6 TO ENABLE PRINTER IN HIGH SPEED REMOVE R10
7 SPARE HOLES DESIGNATED FOR FUTURE OPTIONS
NOTES: UNLESS OTHERWISE SPECIFIED
1. RESISTORS ARE 1/4 WATT, 5%
2. RESISTANCE VALUES ARE IN OHMS
3. NETWORKS ARE AS FOLLOW:
A. SN7400N - Z15, Z16
B. SN7403N - Z17
C. SN7404N - Z4, Z18
D. SN7474N - Z7, Z14
E. SN7432N - Z6
F. SN7497N - Z2, Z11
G. SN74161N - Z1, Z5
H. SN74164N - Z3
J. SN74165N - Z8
K. SN74197N - Z12, Z13
4. ● OVER GATE SYMBOL DENOTES OPEN COLLECTOR
NOTES CONTD ZONE D7
REVISIONS
ZONE LTR DESCRIPTION DATE APPROVED
D5 A ADDED; R10, Z5-10 WAS GND, CONNECT Z10-10 TO Z14-13; DELETED PINS H & 11 WITH SIGNATURE PRNPRO ADDED J1-1, J2 12/19/72
B CONNECTED Z9-9 TO Z17-3 ADDED SIGNATURE HSPEED-; CONNECTED Z9-8 TO PIN M ADDED SIGNATURE PBUSY-; CONNECTED Z9-10 TO Z10-2 ADDED SIGNATURE REQENA-; CONNECTED Z10-4 TO Z7-9 ADDED SIGNATURE CLEAR-; CONNECTED Z10-13 TO Z16-9 ADDED SIGNATURE BIT9; CONNECTED Z10-6 TO Z17-13 ADDED SIGNATURE BIT9Q; DISCONNECTED Z17-13 FROM Z17-3; ADDED C7; APPLIED +5V TO Z10-1; ADDED NOTE 4; CHANGED SIGNATURE XMTBSY TO TTLRTS ADDED NOTE 6 & CALLOUT 1-17-73
FORMAL RELEASE
C 373511 (Q) 6/7/73
REVISED AND REDRAWN WITH CHANGES 6/7/73
REFERENCE DESIGNATORS
USED NOT USED
Z1 - Z18 Z9, Z10
R1 - R10
C1 - C7
S1 - S2
J1 - J2
SPARE NETWORK LOCATION
PARTS LIST
QTY REQD ITEM NO CODE IDENT PART OR IDENTIFYING NUMBER NOMENCLATURE OR DESCRIPTION PROCUREMENT SPECIFICATION
MATERIAL: NONE
TEXAS INSTRUMENTS
DIAGRAM, LOGIC, DETAILED, 1200 BAUD RECEIVER
SIZE D CODE IDENT NO 96214 DRAWING NO 962303
SCALE NONE REV C SHEET 1
962303

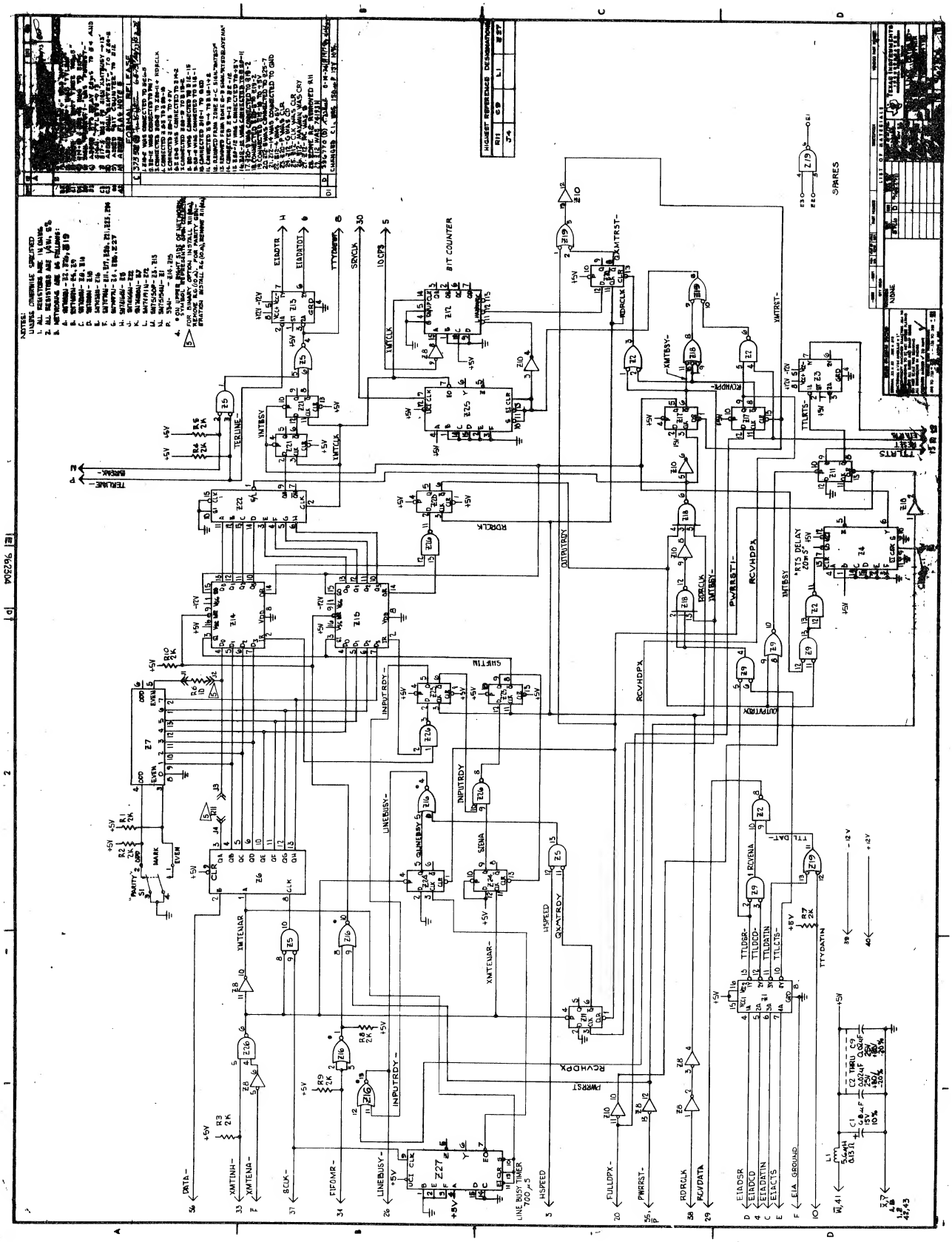

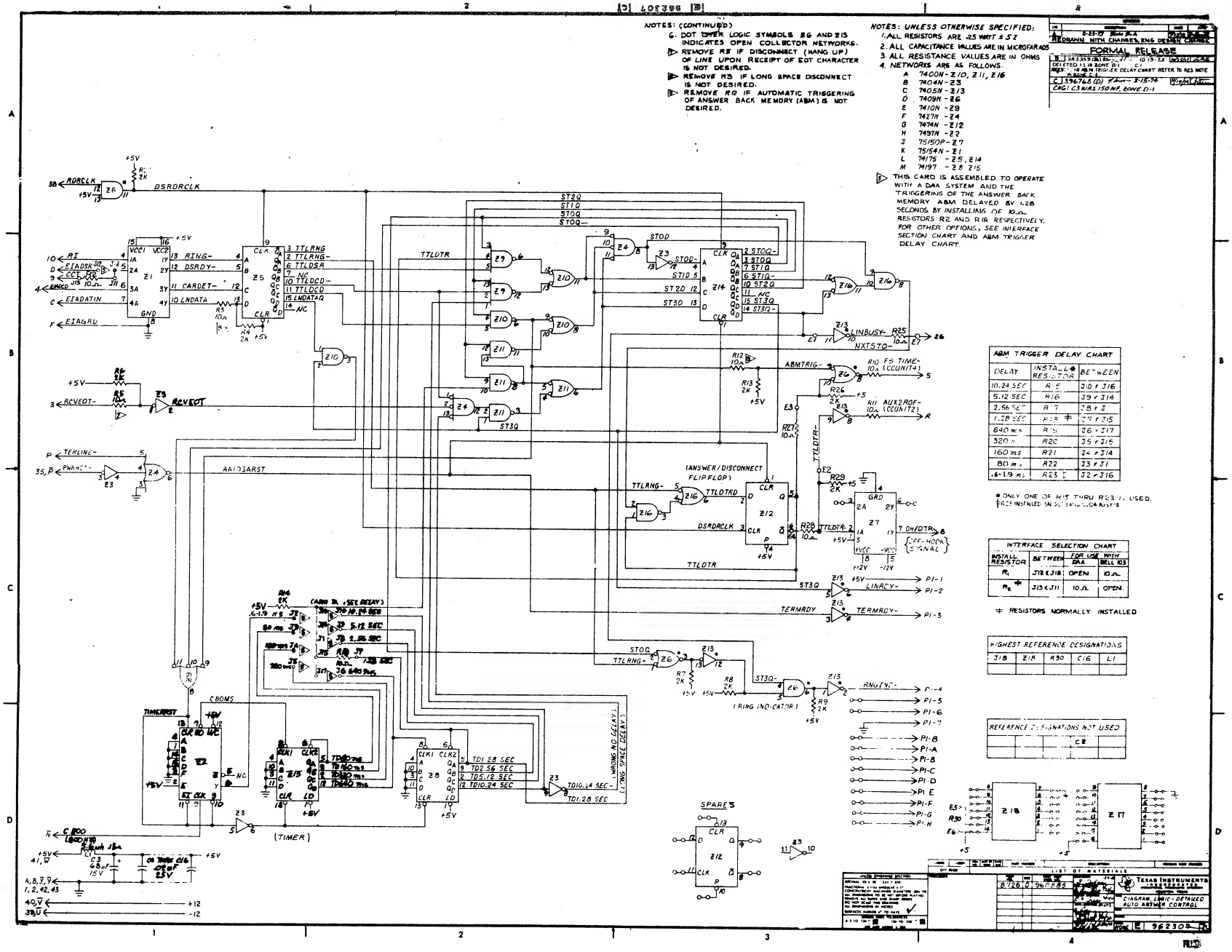
NOTES: (CONTINUED)
6. DOT TYPE LOGIC SYMBOLS E6 AND Z13 INDICATES OPEN COLLECTOR NETWORKS.
REMOVE R8 IF DISCONNECT (HANG UP) OF LINE UPON RECEIPT OF EOT CHARACTER IS NOT DESIRED.
REMOVE R9 IF LONG SPACE DISCONNECT IS NOT DESIRED.
REMOVE R10 IF AUTOMATIC TRIGGERING OF ANSWER BACK MEMORY (ABM) IS NOT DESIRED.
NOTES: UNLESS OTHERWISE SPECIFIED:
1. ALL RESISTORS ARE .25 WATT ± 5%
2. ALL CAPACITANCE VALUES ARE IN MICROFARADS
3. ALL RESISTANCE VALUES ARE IN OHMS
4. NETWORKS ARE AS FOLLOWS.
A 7400N - Z10, Z11, Z16
B 7404N - Z3
C 7405N - Z13
D 7409N - Z6
E 7410N - Z9
F 7427N - Z4
G 7474N - Z12
H 7497N - Z2
J 75150P - Z7
K 75154N - Z1
L 74175 - Z5, Z14
M 74197 - Z8, Z15
THIS CARD IS ASSEMBLED TO OPERATE WITH A DAA SYSTEM AND THE TRIGGERING OF THE ANSWER BACK MEMORY ABM DELAYED BY 4.28 SECONDS BY INSTALLING OF 10Ω RESISTORS R12 AND R18 RESPECTIVELY. FOR OTHER OPTIONS, SEE INTERFACE SECTION CHART AND ABM TRIGGER DELAY CHART.
REDRAWN WITH CHANGES, ENG DESIGN CONTROL
FORMAL RELEASE
DELETED (-1) IN ZONE B1 C1
ADD: -1R ABM TRIGGER DELAY CHART REFER TO R23 NOTE IN ZONE E4
CHG: C3 WAS 150 MF, ZONE D-1
ABM TRIGGER DELAY CHART
DELAY | INSTALL RESISTOR | BETWEEN
10.24 SEC | R15 | J10 & J16
5.12 SEC | R16 | J9 & J14
2.56 SEC | R17 | J8 & J
1.28 SEC | R18 * | J7 & J15
640 ms | R19 | J6 & J17
320 ms | R20 | J5 & J15
160 ms | R21 | J4 & J14
80 ms | R22 | J3 & J11
40-19 ms | R23 | J2 & J16
* ONLY ONE OF R15 THRU R23 IS USED.
R23 INSTALLED ON SCHEMATIC LOGIC ASSY'S
INTERFACE SELECTION CHART
INSTALL RESISTOR | BETWEEN | FOR USE WITH DAA | FOR USE WITH BELL 103
R1 | J12 & J18 | OPEN | 10Ω
R2 * | J13 & J11 | 10Ω | OPEN
* RESISTORS NORMALLY INSTALLED
HIGHEST REFERENCE DESIGNATIONS
J18 | Z18 | R30 | C16 | L1
REFERENCE DESIGNATIONS NOT USED
C2
LIST OF MATERIALS
8726,0 96F85
DIAGRAM, LOGIC - DETAILED AUTO ANSWER CONTROL
962305
TEXAS INSTRUMENTS
DATA 100 TERMINAL
+5V
+12
-12
RDRCLK
DSRDRCLK
RI
EIADSR
CCT
EIADATIN
EIAGRU
RING-
DSRDY-
CARDET-
LNDATAQ
TTLRNG
TTLDSR
TTLDCD-
TTLDCD
RCVEOT-
TERLINE-
PWRACT-
ABMDSARST
ST2Q
ST1Q
STOQ
STOQ-
STOD
STID
ST2D
ST3D
ST3Q-
TTLDTR
ABMTRIG-
NXTSTQ-
LINBUSY-
AUX2ROF-
(ANSWER/DISCONNECT FLIP FLOP)
TTLRNG-
TTLDTRD
DSRDRCLK
OH/DTR
(OFF-HOOK SIGNAL)
LINRCY-
TERMRDY
TERMRDY-
RNGIND-
(RING INDICATOR)
PI-1
PI-2
PI-3
PI-4
PI-5
PI-6
PI-7
PI-8
PI-A
PI-B
PI-C
PI-D
PI-E
PI-F
PI-G
PI-H
(ABM 10 SEC DELAY)
.64-1.9 ms
80 ms
160 ms
320 ms
640 ms
1.28 SEC
2.56 SEC
5.12 SEC
10.24 SEC
CBOMS
TIMERRST
(TIMER)
TDI.64 SEC
TDI.28 SEC
TDI2.56 SEC
TDI5.12 SEC
TDI10.24 SEC
(WRONG NO. DELAYS - LONG SPACE DELAYS)
SPARES
Z18
Z17
E5
R30
E6
Z1
Z2
Z3
Z4
Z5
Z6
Z7
Z8
Z9
Z10
Z11
Z12
Z13
Z14
Z15
Z16
C3 68 uF 15V
C6 .05 uF 25V
4,8,7,7
1,2,42,43
40,7
39,U

NOTES: UNLESS OTHERWISE SPECIFIED
1. RESISTANCE VALUES ARE IN OHMS
2. RESISTORS ARE .25 WATT ± 5 %
3. ALL LIGHT-EMITTING DIODES ARE SL1258
4. ~~R4 THRU R6 AND CR4 THRU CR6 NOT USED ON -0001 ASSEMBLY. TO BE USED FOR FUTURE OPTIONS.~~

REVISIONS				
ZONE	LTR	DESCRIPTION	DATE	APPROVED
	A	375812 (D) [illegible] 7/19/73 1) DELETED FLAG NOTE 4 & DOTED LINE FROM AROUND CR4, 5&6 AND R4, 5&6. 2) ADDED 960165-0002 TO PART NUMBER SCHEDULE.	7-23-73	[illegible]

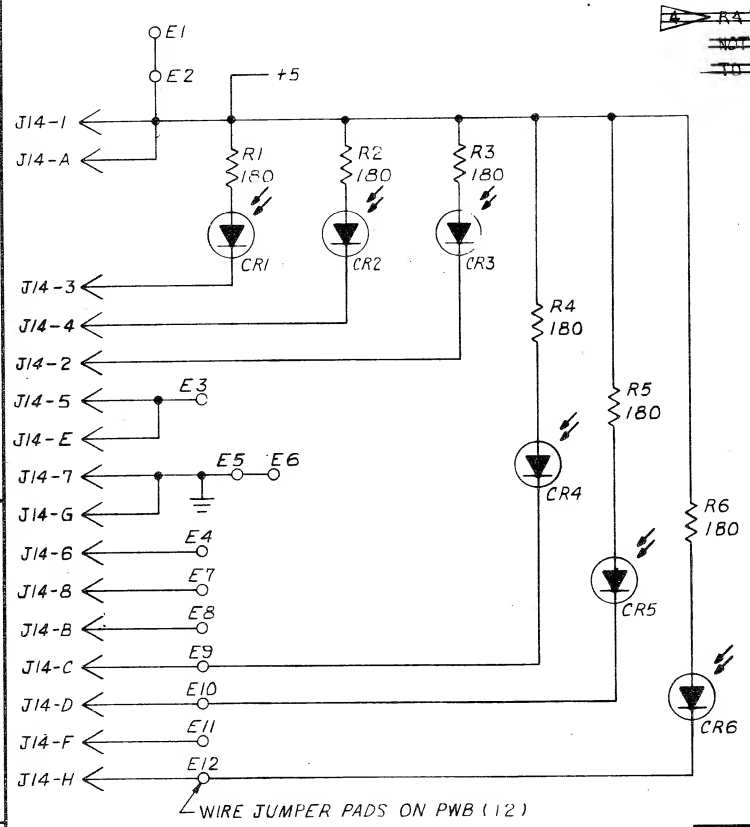

REFERENCE DESIGNATOR CHART	
USED	NOT USED
R1 THRU R6	
CR1 THRU CR6	
E1 THRU E12	

ASSEMBLY NO.	ASSEMBLY DESCRIPTION	TERMINAL READY	NOT USED	RING INDICATOR	RECEIVE MODE	NOT USED	XMT MODE
960165-0002	DISPLAY, BLOCK TRANSMISSION	TERMINAL READY	RING INDICATOR	LINE READY	NOT USED	NOT USED	NOT USED
960165-0001	DISPLAY, AUTO ANSWER	CR1	CR2	CR3	CR4	CR5	CR6

LABELING OF SL1258

-2	-1	ITEM NO	CODE IDENT	PART OR IDENTIFYING NUMBER	NOMENCLATURE OR DESCRIPTION	PROCUREMENT SPECIFICATION
QTY REQD						

PARTS LIST

UNLESS OTHERWISE SPECIFIED
- REMOVE ALL BURRS AND SHARP EDGES
- CONCENTRICITY MACHINED DIAMETERS .010 FIR
- DIMENSIONAL LIMITS APPLY BEFORE FINISH PROCESSING
- IDENTIFYING NUMBERS SHOWN IN PARENTHESES FOR REFERENCE ONLY
- INTERPRET DRAWING IN ACCORDANCE WITH MIL-STD-100

HOLE TOLERANCE

.013 THRU .125 ± .004 −.001	.126 THRU .250 ± .005 −.001	.251 THRU .500 ± .006 −.001
.501 THRU .750 ± .008 −.001	.751 THRU 1.000 ± .010 −.001	1.001 THRU 2.000 ± .012 −.001

NEXT ASSY	USED ON
960165	8726

APPLICATION

UNLESS OTHERWISE SPECIFIED
- DIMENSIONS ARE IN INCHES
- TOLERANCES: ANGLES ± 1° 3 PLACE DECIMALS ± .010 2 PLACE DECIMALS ± .02

MATERIAL:

		DATE
DWN	B. Urban	12-19-72
CHK	D. Booth III	3/9/73
ENGR	R. E. Vieau	3-9-73
QA	[illegible]	3/[illegible]/73
APVD		
CONTR NO		
DESIGN ACTIVITY RELEASE	Ed Vitik	3-22-73

TEXAS INSTRUMENTS INCORPORATED
Equipment Group Dallas, Texas

DIAGRAM, LOGIC, DETAILED, OPTION PANEL DISPLAY

SIZE	CODE IDENT NO	DRAWING NO
C	96214	962308

SCALE NONE REV A SHEET 1 OF 1

962308 C

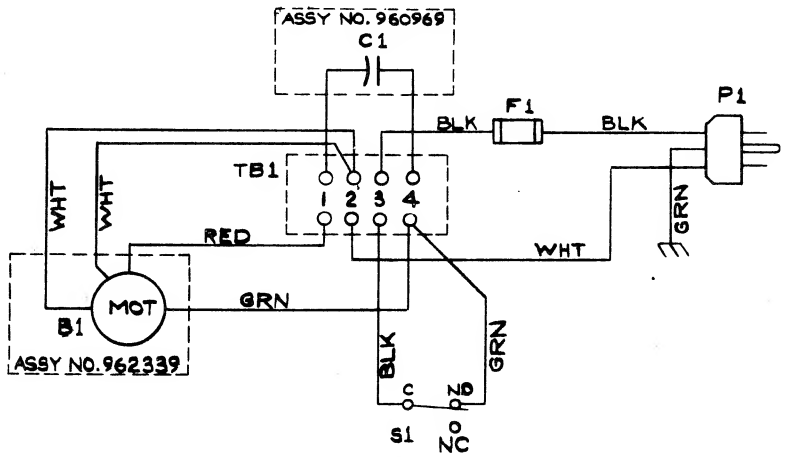

B 962353

REVISIONS

ZONE	LTR	DESCRIPTION	DATE	APPROVED

-2	-1	ITEM NO	CODE IDENT	PART OR IDENTIFYING NUMBER	NOMENCLATURE OR DESCRIPTION	PROCUREMENT SPECIFICATION
QTY REQD						

PARTS LIST

UNLESS OTHERWISE SPECIFIED
- REMOVE ALL BURRS AND SHARP EDGES
- CONCENTRICITY MACHINED DIAMETERS .010 FIR
- DIMENSIONAL LIMITS APPLY BEFORE FINISH PROCESSING
- IDENTIFYING NUMBERS SHOWN IN PARENTHESES FOR REFERENCE ONLY
- INTERPRET DRAWING IN ACCORDANCE WITH MIL-STD-100

HOLE TOLERANCE

.013 THRU .125 ± .004 − .001	.126 THRU .250 ± .005 − .001	.251 THRU .500 ± .006 − .001
.501 THRU .750 ± .008 − .001	.751 THRU 1.000 ± .010 − .001	1.001 THRU 2.000 ± .012 − .001

NEXT ASSY	USED ON
960133	8726

APPLICATION

UNLESS OTHERWISE SPECIFIED
- DIMENSIONS ARE IN INCHES
- TOLERANCES: ANGLES ± 1° 3 PLACE DECIMALS ± .010 2 PLACE DECIMALS ± .02

MATERIAL:

DWN M. Ritchie DATE 1-15-73
CHK J. Barth 2/19/73
ENGR J. Burke 2/21/73
QA J. Hart 2/4/73
APVD H. V. Hill 2-21-73
CONTR NO
DESIGN ACTIVITY RELEASE 2/27/73

TEXAS INSTRUMENTS INCORPORATED
Equipment Group Dallas, Texas

ELTN SCHEMATIC DIAG, PAPER WINDER

SIZE	CODE IDENT NO	DRAWING NO
B	96214	962353

SCALE NONE SHEET 1

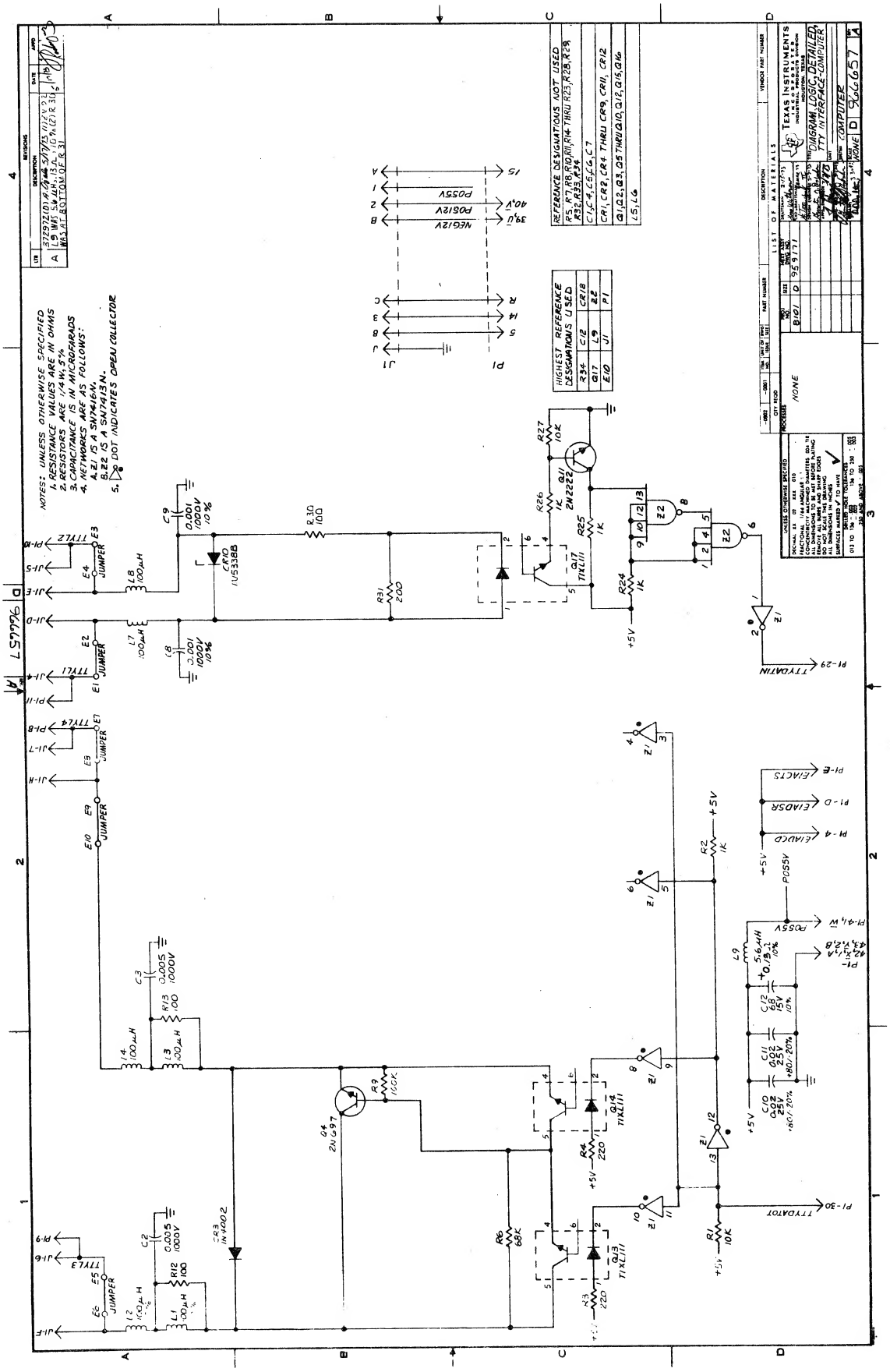
NOTES: UNLESS OTHERWISE SPECIFIED
1. RESISTANCE VALUES ARE IN OHMS
2. RESISTORS ARE 1/4W, 5%
3. CAPACITANCE IS IN MICROFARADS
4. NETWORKS ARE AS FOLLOWS:
A. Z1 IS A SN7416N.
B. Z2 IS A SN7413N.
5. DOT INDICATES OPEN COLLECTOR
REFERENCE DESIGNATIONS NOT USED
R5, R7, R8, R10, R11, R14 THRU R23, R28, R29, R32, R33, R34
C1, C4, C5, C6, C7
CR1, CR2, CR4 THRU CR9, CR11, CR12
Q1, Q2, Q3, Q5 THRU Q10, Q12, Q15, Q16
L5, L6
HIGHEST REFERENCE DESIGNATIONS USED
R34 C12 CR18
Q17 L9 Z2
E10 J1 P1
TEXAS INSTRUMENTS
DIAGRAM, LOGIC, DETAILED, TTY INTERFACE-COMPUTER
COMPUTER
NONE
D 966657
LIST OF MATERIALS
NONE
B101 D 959171
L5996

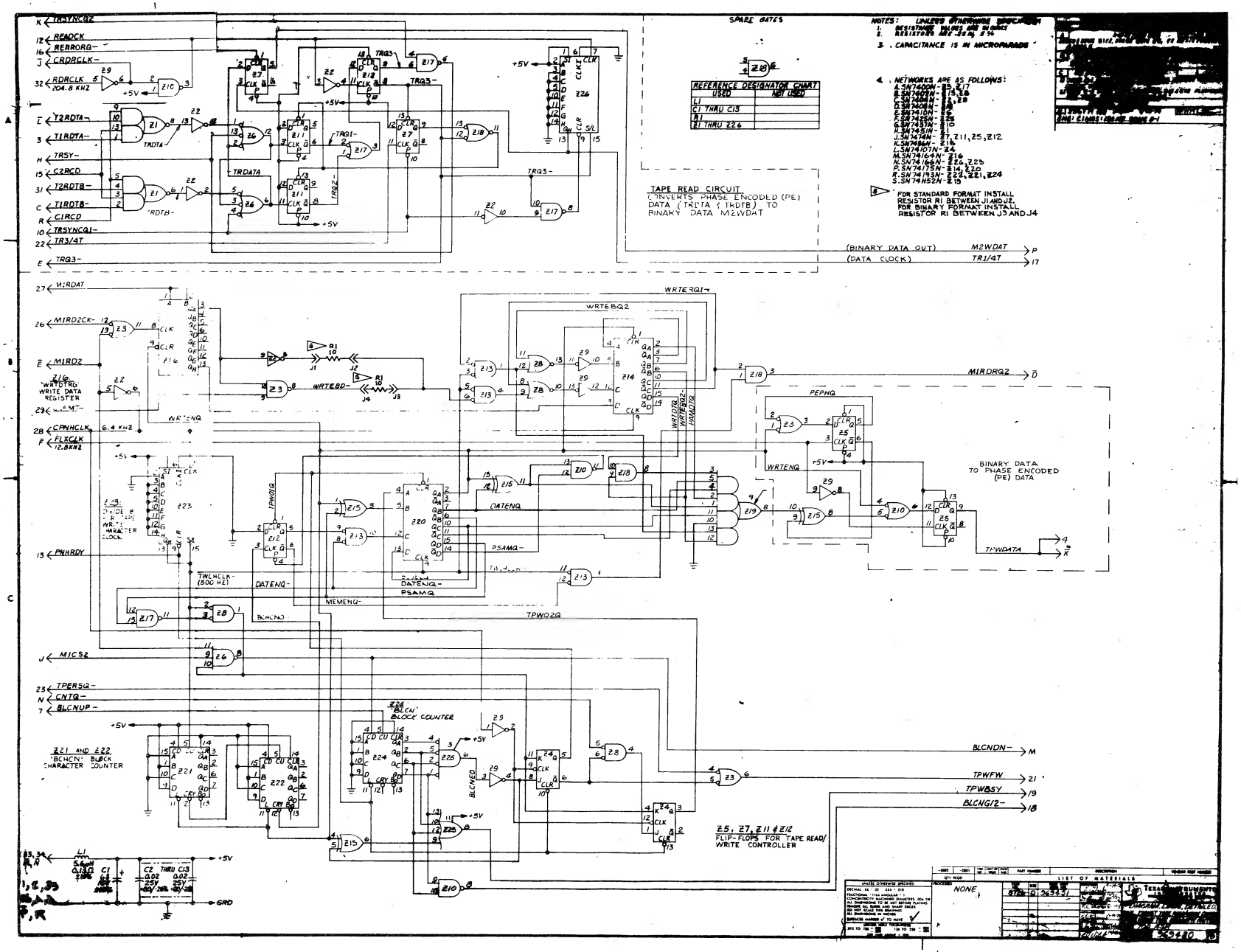
SPARE GATES
REFERENCE DESIGNATOR CHART
USED
NOT USED
C1 THRU C13
Z1 THRU Z26
NOTES:
4. NETWORKS ARE AS FOLLOWS:
A:SN7400N - Z3,Z7
B:SN7404N - Z4,Z8
C:SN7408N - Z9
D:SN7410N - Z6
E:SN7420N - Z5
F:SN7430N - Z10
G:SN7451N - Z1
J:SN7474N - Z7,Z11,Z5,Z12
K:SN7486N - Z15
L:SN74107N - Z4
M:SN74164N - Z16
N:SN74166N - Z26,Z25
P:SN74175N - Z14,Z20
R:SN74193N - Z22,Z21,Z24
S:SN74S20N - Z19
5. FOR STANDARD FORMAT INSTALL RESISTOR R1 BETWEEN J1 AND J2. FOR BINARY FORMAT INSTALL RESISTOR R1 BETWEEN J3 AND J4
TAPE READ CIRCUIT
CONVERTS PHASE ENCODED (PE) DATA (TRDTA / TRDTB) TO BINARY DATA M2WDAT
(BINARY DATA OUT) M2WDAT
(DATA CLOCK) TR1/4T
WRTBQ1-
WRTBQ2
MIRDRQ2
PEPHQ
BINARY DATA TO PHASE ENCODED (PE) DATA
TPWDATA
DATENQ
PSAMQ-
MEMENQ-
TPWD2Q
BLCNDN-
TPWFW
TPWBSY
BLCNG/2-
Z5, Z7, Z11 & Z12 FLIP-FLOPS FOR TAPE READ/ WRITE CONTROLLER
Z21 AND Z22 'BCHCN' BLOCK CHARACTER COUNTER
Z24 'BLCN' BLOCK COUNTER
LIST OF MATERIALS
NONE

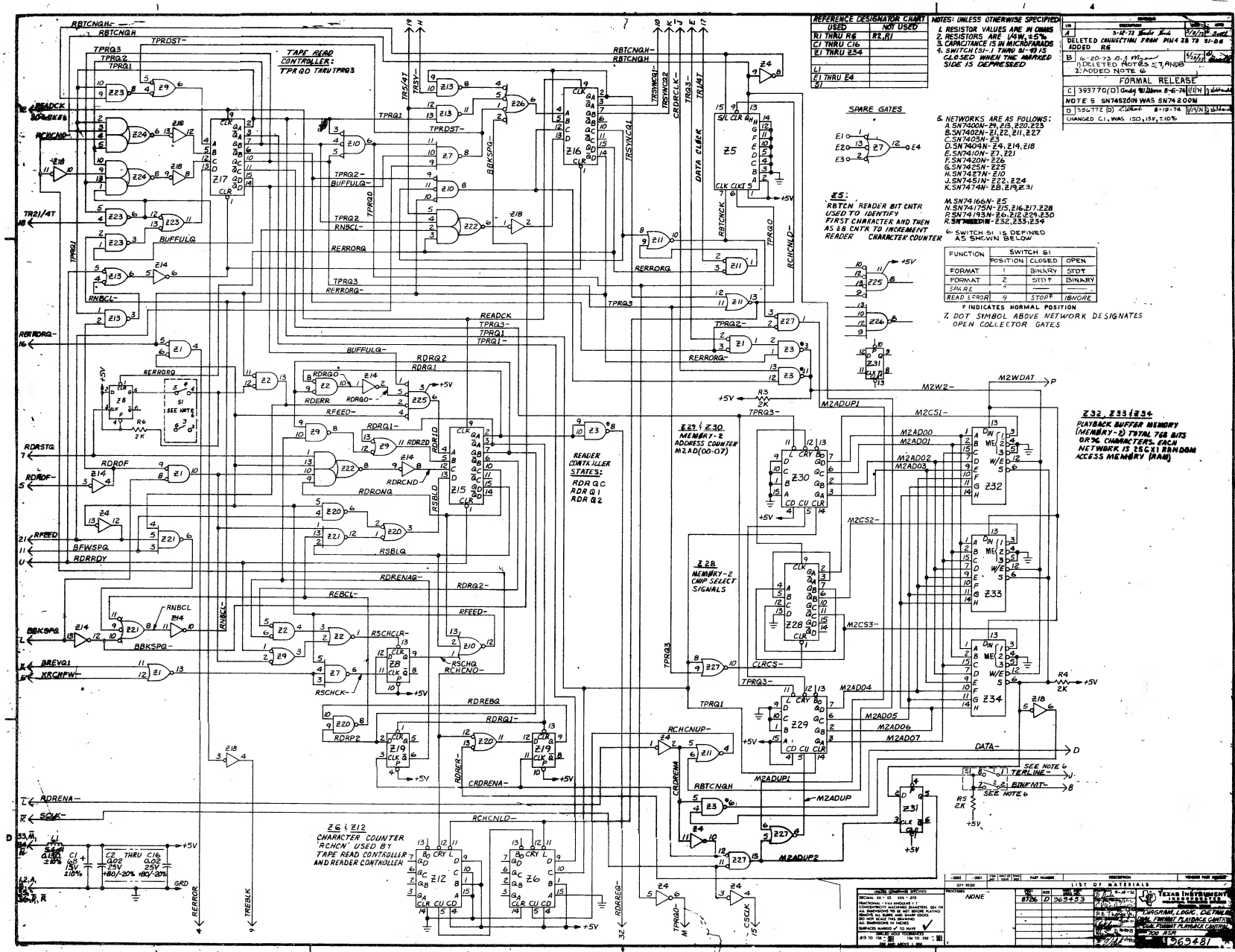
REFERENCE DESIGNATOR CHART
USED
NOT USED
R1 THRU R6
R2,R1
C1 THRU C16
E1 THRU E34
L1
E1 THRU E4
S1
NOTES: UNLESS OTHERWISE SPECIFIED
1. RESISTOR VALUES ARE IN OHMS
2. RESISTORS ARE 1/4W, ±5%
3. CAPACITANCE IS IN MICROFARADS
4. SWITCH (S1-1 THRU S1-9) IS CLOSED WHEN THE MARKED SIDE IS DEPRESSED
SPARE GATES
5. NETWORKS ARE AS FOLLOWS:
A. SN7400N- Z9, Z15, Z20, Z23
B. SN7402N- Z1, Z2, Z11, Z27
C. SN7403N- Z3
D. SN7404N- Z4, Z19, Z18
E. SN7410N- Z7, Z21
F. SN7420N- Z26
G. SN7425N- Z25
H. SN7427N- Z10
J. SN7451N- Z22, Z24
K. SN7474N- Z8, Z9, Z31
L. SN74166N- Z5
M. SN74175N- Z15, Z16, Z17, Z28
N. SN74193N- Z6, Z12, Z29, Z30
P. SN74S288N- Z32, Z33, Z34
6. SWITCH S1 IS DEFINED AS SHOWN BELOW
FUNCTION
SWITCH S1
POSITION
CLOSED
OPEN
FORMAT 1
BINARY
STDT
FORMAT 2
STDT
BINARY
SPARE 3
READ ERROR 4
STOP*
IGNORE
* INDICATES NORMAL POSITION
7. DOT SYMBOL ABOVE NETWORK DESIGNATES OPEN COLLECTOR GATES
Z5:
RBTCN READER BIT CNTR USED TO IDENTIFY FIRST CHARACTER AND THEN AS Z8 CNTR TO INCREMENT READER CHARACTER COUNTER
TAPE READ CONTROLLER: TPRQ0 THRU TPRQ3
Z6 & Z12 CHARACTER COUNTER 'RCHCN' USED BY TAPE READ CONTROLLER AND READER CONTROLLER
READER CONTROLLER STATES: RDR Q0 RDR Q1 RDR Q2
Z29 & Z30 MEMORY-2 ADDRESS COUNTER M2AD(00-07)
Z28 MEMORY-2 CHIP SELECT SIGNALS
Z32, Z33 & Z34 PLAYBACK BUFFER MEMORY (MEMORY-2) TOTAL 768 BITS OR 96 CHARACTERS. EACH NETWORK IS 256 X 1 RANDOM ACCESS MEMORY (RAM)
SEE NOTE 6
TERMINC-
BINPMT-
SEE NOTE 6
RBTCNGH-
RBTCNGH
READCK
RCHCNG-
TR21/4T
BUFFULQ-
RERRORQ-
RNBCL-
RDRDRQ-
RDRSTQ
RDROF
RDROF-
RFEED-
BFWSPQ
RDRRDY
BBKSPQ
BBKSPQ-
BREVQ1
XRCNFW-
RDRENAQ-
REBCL-
RSCHCLR-
RSCHCK-
RSCHCNO-
RDREBQ
RDRP2
RDRENA-
SCLK-
RERROR
TREBLK
RCHCNLD-
RDREQ-
TPRQ0-
CSCLK
M2W2-
M2WDAT
M2ADUP1
M2CS1-
M2CS2-
M2CS3-
M2AD00
M2AD01
M2AD02
M2AD03
M2AD04
M2AD05
M2AD06
M2AD07
DATA-
M2ADUP
M2ADUP2
CLRCS-
RCHCNUP-
CRDRENA-
R1 2K
R2 2K
R3 2K
R4 2K
R5 2K
C1 .068 ±10%
C2 THRU C16 .002 ±80/-20%
+5V
GRD
DELETED CONNECTION FROM PIN 4 Z8 TO 11-0-8
ADDED R6
DELETED NOTES 2, 7, AND 8
ADDED NOTE 6
FORMAL RELEASE
393770(D)
NOTE 5 SN74S20N WAS SN74200N
396772 (D)
CHANGED C1, WAS 150, 15V, ±10%
LIST OF MATERIALS
NONE
TEXAS INSTRUMENTS
DIAGRAM, LOGIC, CUSTOMER ENGR. FORMAT PLAYBACK CONTROL
700 ASR
1956481

C44

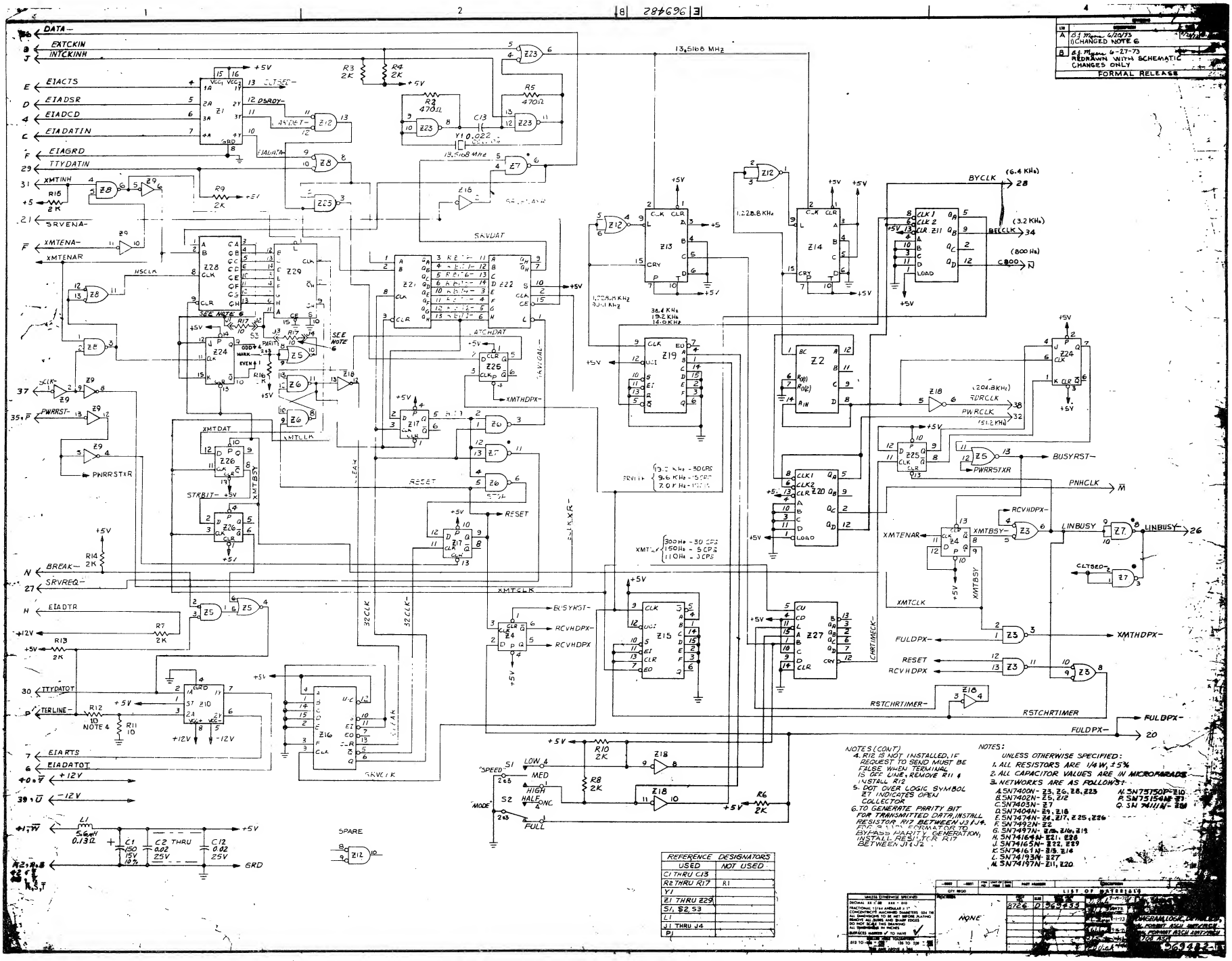
DATA–
EXTCKIN
INTCKINH
EIACTS
EIADSR
EIADCD
EIADATIN
EIAGRD
TTYDATIN
XMTINH
XMTENA–
XMTENAR
SRVENA–
SCLK–
PWRRST–
BREAK–
SRVREQ–
EIADTR
TTYDATOT
TERLINE–
EIARTS
EIADATOT
+12V
–12V
+5V
GRD
13.5168 MHz
BYCLK (6.4 KHz)
BECLK (3.2 KHz)
C800 (800 Hz)
SRVDAT
ATCHDAT
XMTHDPX–
XMTDAT
XMTCLK
XMTBSY
STRBIT–
RESET
SRVCLK
BUSYRST–
RCVHDPX–
RCVHDPX
PWRRSTXR
PWRCLK
PNHCLK
LINBUSY
CLTSEC–
FULDPX–
RSTCHRTIMER–
RSTCHRTIMER
SPEED
MODE
LOW
MED
HIGH
HALF DUNC
FULL
SPARE
SEE NOTE 6
NOTE 4
NOTES:
UNLESS OTHERWISE SPECIFIED:
1. ALL RESISTORS ARE 1/4 W, ±5%
2. ALL CAPACITOR VALUES ARE IN MICROFARADS
3. NETWORKS ARE AS FOLLOWS:
A. SN7400N – Z3, Z6, Z8, Z25
B. SN7402N – Z5, Z12
C. SN7403N – Z7
D. SN7404N – Z9, Z18
E. SN7474N – Z4, Z17, Z25, Z26
F. SN7492N – Z2
G. SN7497N – Z16, Z19
H. SN74164N – Z21, Z28
J. SN74165N – Z22, Z29
K. SN74161N – Z15, Z16
L. SN74193N – Z27
M. SN74197N – Z11, Z20
N. SN75150P – Z10
P. SN75154N – Z1
Q. SN 74111N – Z30
NOTES (CONT)
4. R12 IS NOT INSTALLED, IF REQUEST TO SEND MUST BE FALSE WHEN TERMINAL IS OFF LINE, REMOVE Z11 & INSTALL R12
5. DOT OVER LOGIC SYMBOL Z7 INDICATES OPEN COLLECTOR
6. TO GENERATE PARITY BIT FOR TRANSMITTED DATA, INSTALL RESISTOR R17 BETWEEN J13 J14. FOR 8 BIT FORMATOR TO BYPASS PARITY GENERATION) INSTALL RESISTOR R17 BETWEEN J14 J2
REFERENCE DESIGNATORS
USED: C1 THRU C13; R2 THRU R17; Y1; Z1 THRU Z29; S1, S2, S3; L1; J1 THRU J4; P1
NOT USED: R1
FORMAL RELEASE
A 8-1 M. Mann 6/20/73 1) CHANGED NOTE 6
B 8-1 M. Mann 6-27-73 REDRAWN WITH SCHEMATIC CHANGES ONLY
LIST OF MATERIALS
NONE
MAGNALOG 6800 MODEM, W/ ROBERT ASCII INTERFACE, W/ FORMAT ASCII CONTROLLER
DOC ASCI
369482-1
8726 01 369482

NOTES: UNLESS OTHERWISE SPECIFIED
1. RESISTANCE VALUES ARE IN OHMS
2. RESISTORS ARE 1/4 W, ±5%
3. CAPACITANCE VALUES ARE IN MICROFARADS
4. AMPLIFIERS ARE SN72558P
5. DIODES ARE IN914B
6 COMPONENTS NOT USED
REVISIONS
A 402142 7-23-75 REVISED TO ALLOW ADJUSTMTS TO RECEIVER FILTERS (XMIT FREQ ADJUSTM'T MADE EASIER
FORMAL RELEASE
B 591827 (E) 10-1-75
C CN424674
1) SH1, ZB-6 Q3 DESCR WAS TIS75
2) SH1, ZC-8 R3 WAS 200K, 1%
D CN424082
(1) ADDED CR21 & R88 IN Z(C-4) SH2
REFERENCE DESIGNATORS
USED
AR1 THRU AR10
C1 THRU C22
CR1 THRU CR20
Q1 Q2 Q3
R1 THRU R87
P1, P2, P3
NOT USED
R35 R36
SPARES
COUPLER XMIT DATA
CARRIER DCD
LMTR (SH2)
INTGR (SH2 ZONE C4)
PARTS LIST
TEXAS INSTRUMENTS
DIAGRAM, SCHEMATIC, 733 ACOUSTIC COUPLER
D 96214 969502

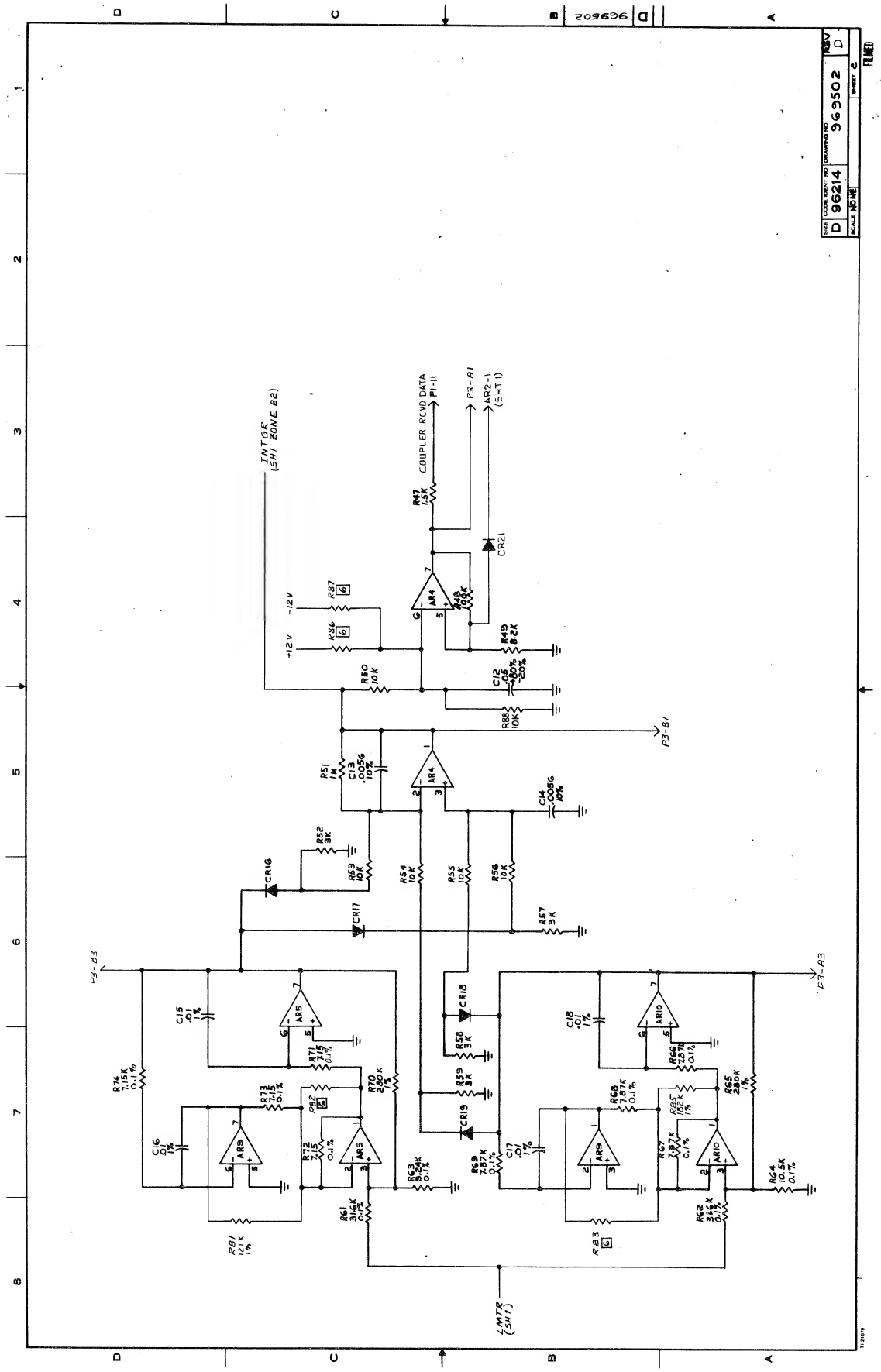
INTGR (SH1 ZONE B2)
COUPLER RCVD DATA P1-11
P3-A1
AR2-1 (SHT 1)
CR21
-12 V
+12 V
P3-B1
P3-B3
P3-A3
CR16
CR17
CR18
CR19
AR4
AR5
AR9
AR10
R47 1.5K
R48 100K
R49 8.2K
R50 10K
R51 1M
R52 3K
R53 10K
R54 10K
R55 10K
R56 10K
R57 3K
R58 3K
R59 3K
R61 3.16K 0.1%
R62 3.16K 0.1%
R63 5.24K 0.1%
R64 10.5K 0.1%
R65 280K 1%
R66 1.27K 0.1%
R67 7.87K 0.1%
R68 7.87K 0.1%
R69 7.87K 0.1%
R70 280K 1%
R71 7.15 0.1%
R72 7.15 0.1%
R73 7.15 0.1%
R74 7.15K 0.1%
R81 12K 1%
R82 6
R83 6
R85 10.2K 1%
R86 6
R87 6
C12 .05 +100% -20%
C13 .0056 10%
C14 .0056 10%
C15 .01 1%
C16 .01 1%
C17 .01 1%
C18 .01 1%
-MTR (SH1)
SIZE D
CODE IDENT NO 96214
DRAWING NO 96502
REV D
SCALE NONE
SHEET 2
FILMED

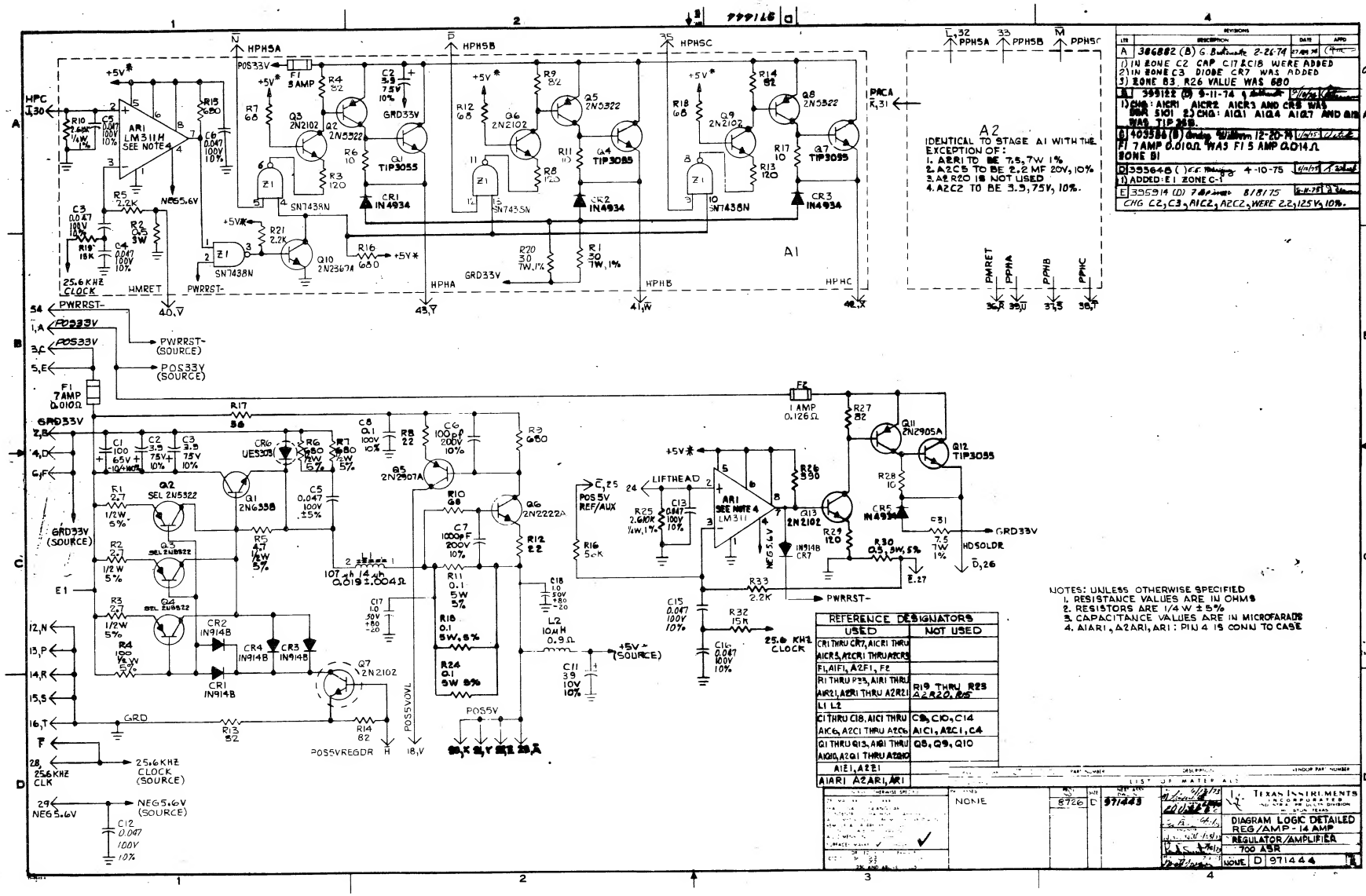
A1
A2
IDENTICAL TO STAGE A1 WITH THE EXCEPTION OF:
1. A2R1 TO BE 7.5, 7W 1%
2. A2C5 TO BE 2.2 MF 20V, 10%
3. A2R20 IS NOT USED
4. A2C2 TO BE 3.9, 75V, 10%.
REVISIONS
A 386882 (B) G. Bustamante 2-26-74
1) IN ZONE C2 CAP C17 & C18 WERE ADDED
2) IN ZONE C3 DIODE CR7 WAS ADDED
3) ZONE B3, R26 VALUE WAS 680
B 399122 (D) 9-11-74
1) CHG: A1CR1 A1CR2 A1CR3 AND CR5 WAS DBR 5101 2) CHG: A1Q1 A1Q4 A1Q7 AND Q12 WAS TIP 35B.
C 403586 (B) 12-20-74
F1 7AMP 0.010Ω WAS F1 5 AMP 0.014Ω
ZONE B1
D 395648 ( ) 4-10-75
1) ADDED: E1 ZONE C-1
E 395914 (D) 8/8/75
CHG C2, C3, A1C2, A2C2, WERE 2.2, 125V, 10%.
NOTES: UNLESS OTHERWISE SPECIFIED
1. RESISTANCE VALUES ARE IN OHMS
2. RESISTORS ARE 1/4 W ± 5%
3. CAPACITANCE VALUES ARE IN MICROFARADS
4. A1AR1, A2AR1, AR1: PIN 4 IS CONN TO CASE
REFERENCE DESIGNATORS
USED | NOT USED
CR1 THRU CR7, A1CR1 THRU A1CR3, A2CR1 THRU A2CR3
F1, A1F1, A2F1, F2
R1 THRU R23, A1R1 THRU A1R21, A2R1 THRU A2R21
R19 THRU R23 A2R20, R15
L1 L2
C1 THRU C18, A1C1 THRU A1C6, A2C1 THRU A2C6
C9, C10, C14 A1C1, A2C1, C4
Q1 THRU Q13, A1Q1 THRU A1Q10, A2Q1 THRU A2Q10
Q8, Q9, Q10
A1Z1, A2Z1
A1AR1 A2AR1, AR1
LIST OF MATERIALS
NONE
8726
D
971443
TEXAS INSTRUMENTS INCORPORATED
DIAGRAM LOGIC DETAILED REG/AMP - 14 AMP
REGULATOR/AMPLIFIER
700 ASR
NONE D 971444

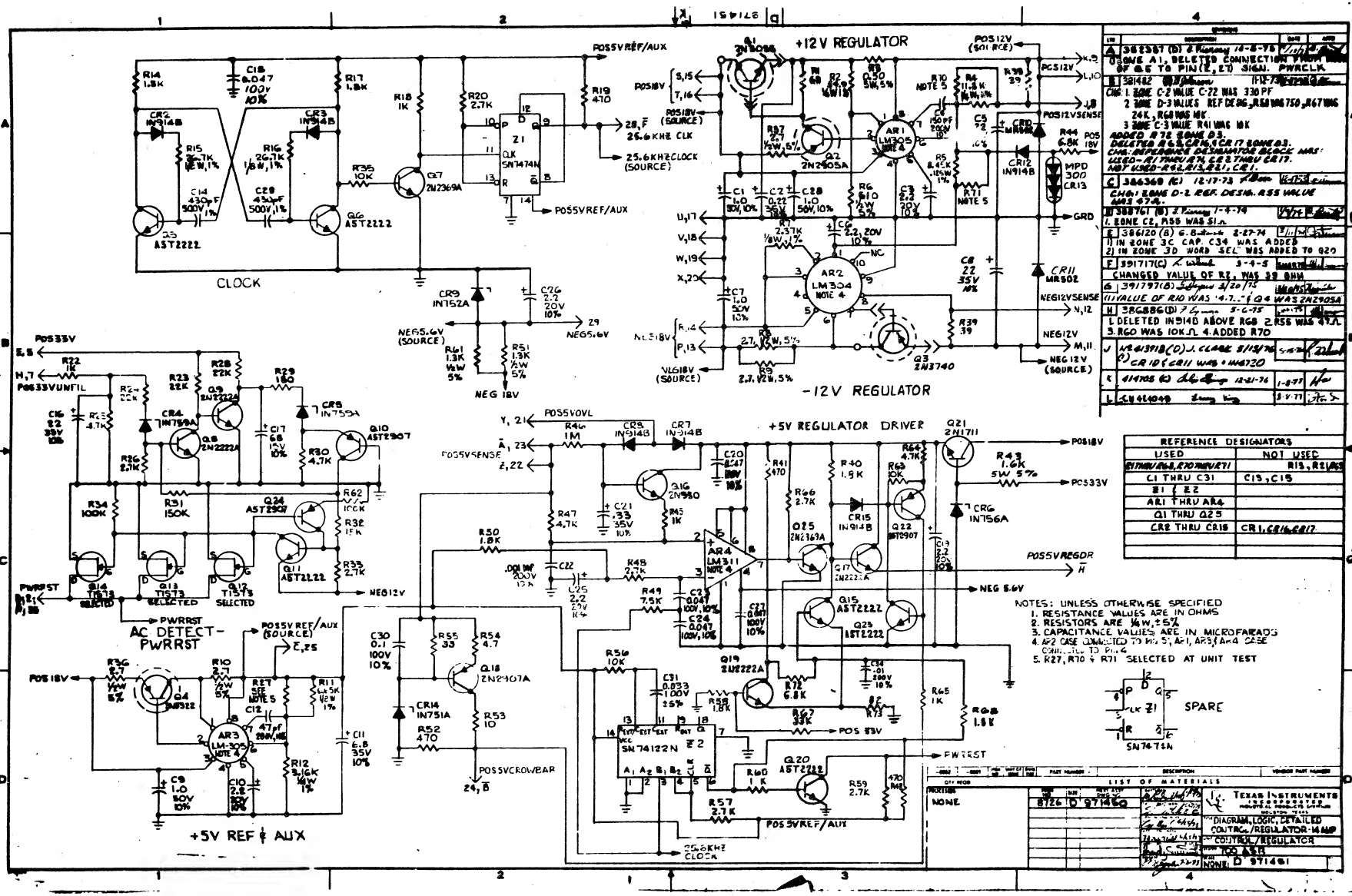
CLOCK
+12V REGULATOR
-12V REGULATOR
+5V REGULATOR DRIVER
+5V REF & AUX
AC DETECT-PWRRST
SPARE
SN74175N
NOTES: UNLESS OTHERWISE SPECIFIED
1. RESISTANCE VALUES ARE IN OHMS
2. RESISTORS ARE ½W, ±5%
3. CAPACITANCE VALUES ARE IN MICROFARADS
4. AR2 CASE CONNECTED TO PIN 5, AR1, AR3, AR4 CASE CONNECTED TO PIN 4
5. R27, R70 & R71 SELECTED AT UNIT TEST
REFERENCE DESIGNATORS
USED
NOT USED
C1 THRU C31
Z1 & Z2
AR1 THRU AR4
Q1 THRU Q25
CR2 THRU CR15
CR1, CR16, CR17
LIST OF MATERIALS
NONE
TEXAS INSTRUMENTS
DIAGRAM, LOGIC, DETAILED CONTROL/REGULATOR-14 AMP
CONTROL/REGULATOR
D 971461

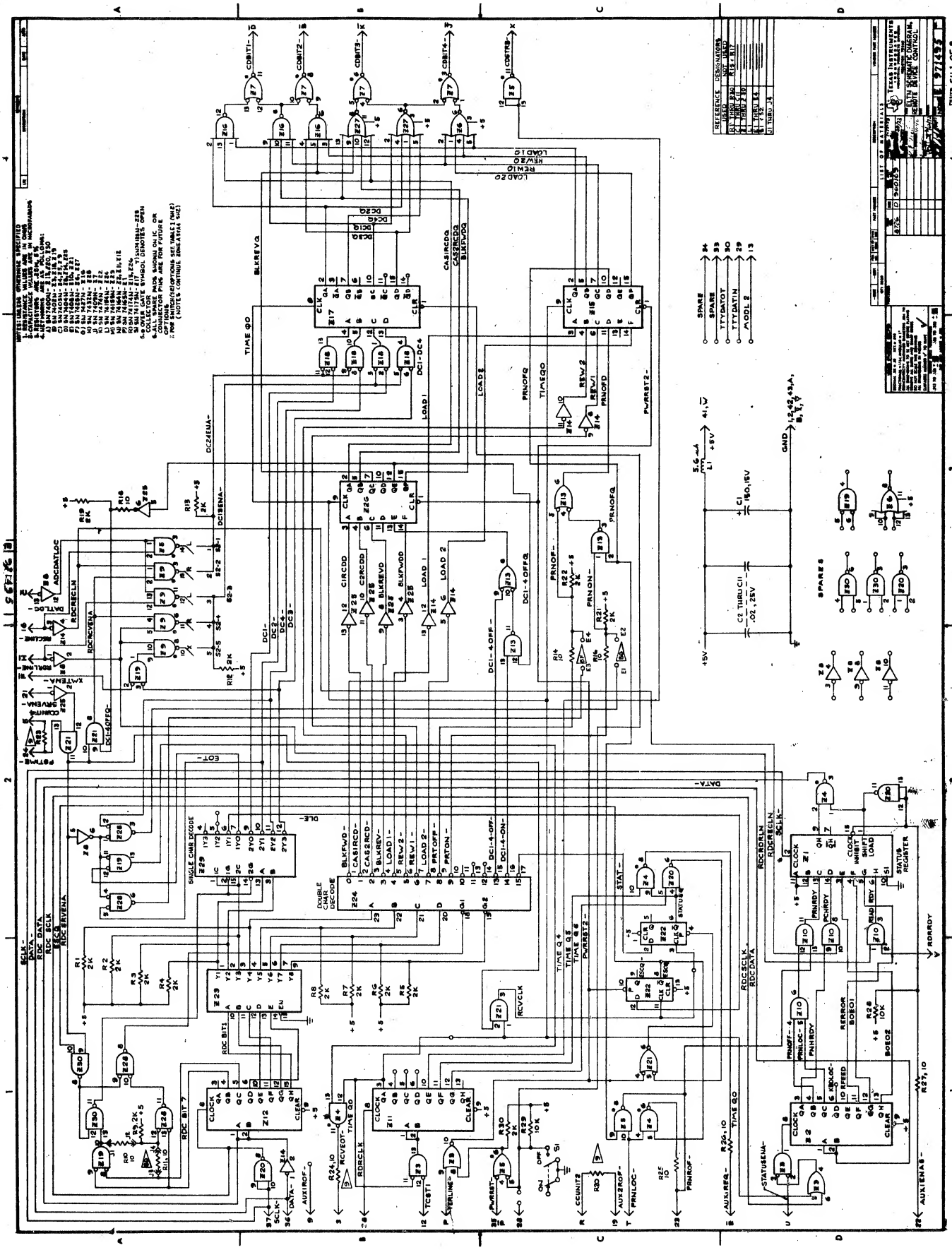

ASCII CHARACTER COLUMN 1 R11 INSTALLED	ASCII CHARACTER COLUMN 2 R10* INSTALLED	Z23 PATTERN #1 INPUT ADDRESS E	D	C	B	A	OUTPUT CODE Y8	Y7	Y6	Y5	Y4	Y3	Y2	Y1	SIGNAL SIGNATURE DOUBLE CHAR DECODE (Z24) "DLE ___"	SINGLE CHAR DECODE (Z29) (COLUMN 1 CHARS ONLY)
NUL	SPACE	0	0	0	0	0	1	0	0	0	0	1	1	1		
SOH	!	0	0	0	0	1	1	0	0	0	0	1	1	1		
STX	"	0	0	0	1	0	1	0	0	0	0	1	1	1		
ETX	#	0	0	0	1	1	1	0	0	0	0	1	1	1		
EOT	$	0	0	1	0	0	1	0	0	0	0	1	0	0		EOT
ENQ	%	0	0	1	0	1	1	0	0	0	0	1	1	1		
ACK	&	0	0	1	1	0	1	0	0	0	0	1	1	1		
BEL	'	0	0	1	1	1	1	0	0	0	0	1	1	1		
BS	(	0	1	0	0	0	1	0	0	0	0	1	1	1		
HT	)	0	1	0	0	1	1	0	0	0	0	1	1	1		
LF	*	0	1	0	1	0	1	0	0	0	0	1	1	1		
VT	+	0	1	0	1	1	1	0	0	0	0	1	1	1		
FF	,	0	1	1	0	0	1	0	0	0	0	1	1	1		
CR	-	0	1	1	0	1	1	0	0	0	0	1	1	1		
SO	.	0	1	1	1	0	1	0	0	0	0	1	1	1		
SI	/	0	1	1	1	1	1	0	0	0	0	1	1	0		(DECODE 6)
DLE	0	1	0	0	0	0	0	1	0	0	0	1	0	1	PRN OFF	DLE
DC1	1	1	0	0	0	1	0	0	1	1	0	0	0	0	REW 1	DC1
DC2	2	1	0	0	1	0	0	0	1	0	1	0	0	1	REW 2	DC2
DC3	3	1	0	0	1	1	0	0	1	0	0	0	1	1	LOAD 1	DC3
DC4	4	1	0	1	0	0	0	0	1	1	1	0	1	0	LOAD 2	DC4
NAK	5	1	0	1	0	1	0	0	0	0	1	1	1	1	CAS1 RCD	
SYN	6	1	0	1	1	0	0	0	0	1	0	1	1	1	CAS2 RCD	
ETB	7	1	0	1	1	1	0	0	0	0	0	1	1	1	BLK FWD	
CAN	8	1	1	0	0	0	0	0	0	1	1	1	1	1	BLK REV	
EM	9	1	1	0	0	1	0	1	0	0	1	1	1	1	PRN ON	
SUB	:	1	1	0	1	0	0	1	1	1	0	1	1	1	DC1-4 ON	
ESC	;	1	1	0	1	1	0	1	1	0	1	1	1	1	DC1-4 OFF	
FS	<	1	1	1	0	0	0	1	1	1	1	1	1	1	STATUS	
GS	=	1	1	1	0	1	0	1	0	1	0	1	1	1	(DECODE 10)	
RS	>	1	1	1	1	0	0	1	0	1	1	1	1	1	(DECODE 11)	
US	?	1	1	1	1	1	0	1	1	0	0	1	1	1	(DECODE 12)	

ASCII CHARACTER COLUMN 1 R11 INSTALLED	ASCII CHARACTER COLUMN 2 R10* INSTALLED	Z23 PATTERN #3 INPUT ADDRESS E	D	C	B	A	OUTPUT CODE Y8	Y7	Y6	Y5	Y4	Y3	Y2	Y1	SIGNAL SIGNATURE DOUBLE CHAR DECODE (Z24) "DLE ___"	SINGLE CHAR DECODE (Z29) (COLUMN 1 CHARS ONLY)
NUL	SPACE	0	0	0	0	0	1	0	0	0	0	1	1	1		
SOH	!	0	0	0	0	1	1	0	0	0	0	0	0	0		DC1
STX	"	0	0	0	1	0	1	0	0	0	0	1	1	1		
ETX	#	0	0	0	1	1	1	0	0	0	0	1	1	1		
EOT	$	0	0	1	0	0	1	0	0	0	0	1	0	0		ETO
ENQ	%	0	0	1	0	1	1	0	0	0	0	1	1	1		
ACK	&	0	0	1	1	0	1	0	0	0	0	1	1	1		
BEL	'	0	0	1	1	1	1	0	0	0	0	1	1	1		
BS	(	0	1	0	0	0	1	0	0	0	0	1	1	1		
HT	)	0	1	0	0	1	1	0	0	0	0	1	1	1		
LF	*	0	1	0	1	0	1	0	0	0	0	1	1	1		
VT	+	0	1	0	1	1	1	0	0	0	0	1	1	1		
FF	,	0	1	1	0	0	1	0	0	0	0	1	1	1		
CR	-	0	1	1	0	1	1	0	0	0	0	1	1	1		
SO	.	0	1	1	1	0	1	0	0	0	0	1	1	1		
SI	/	0	1	1	1	1	1	0	0	0	0	1	1	1		
DLE	0	1	0	0	0	0	0	1	0	0	0	1	0	1	PRN OFF	DLE
DC1	1	1	0	0	0	1	0	0	1	1	0	1	1	0	REW 1	(DECODE 6)
DC2	2	1	0	0	1	0	0	0	1	0	1	0	0	1	REW 2	DC2
DC3	3	1	0	0	1	1	0	0	1	0	0	0	1	1	LOAD 1	DC3
DC4	4	1	0	1	0	0	0	0	1	1	1	0	1	0	LOAD 2	DC4
NAK	5	1	0	1	0	1	0	0	0	0	1	1	1	1	CAS 1 RCD	
SYN	6	1	0	1	1	0	0	0	0	1	0	1	1	1	CAS 2 RCD	
ETB	7	1	0	1	1	1	0	0	0	0	0	1	1	1	BLKFWD	
CAN	8	1	1	0	0	0	0	0	0	1	1	1	1	1	BLK REV	
EM	9	1	1	0	0	1	0	1	0	0	1	1	1	1	PRN ON	
SUB	:	1	1	0	1	0	0	1	1	1	0	1	1	1	DC1-4 ON	
ESC	;	1	1	0	1	1	0	1	1	0	1	1	1	1	DC1-4 OFF	
FS	<	1	1	1	0	0	0	1	1	1	1	1	1	1	STATUS	
GS	=	1	1	1	0	1	0	1	0	1	0	1	1	1	(DECODE 10)	
RS	>	1	1	1	1	0	0	1	0	1	1	1	1	1	(DECODE 11)	
US	?	1	1	1	1	1	0	1	1	0	0	1	1	1	(DECODE 12)	

ASCII CHARACTER COLUMN 1 R11 INSTALLED	ASCII CHARACTER COLUMN 2 R10* INSTALLED	Z23 PATTERN #2 INPUT ADDRESS E	D	C	B	A	OUTPUT CODE Y8	Y7	Y6	Y5	Y4	Y3	Y2	Y1	SIGNAL SIGNATURE DOUBLE CHAR DECODE (Z24) "DLE ___"	SINGLE CHAR DECODE (Z29) COLUMN 1 CHARS ONLY)
NUL	SPACE	0	0	0	0	0	1	0	0	0	0	1	1	1		
SOH	!	0	0	0	0	1	1	0	0	0	0	1	1	1		
STX	"	0	0	0	1	0	1	0	0	0	0	1	1	1		
ETX	#	0	0	0	1	1	1	0	0	0	0	1	1	1		
EOT	$	0	0	1	0	0	1	0	0	0	0	1	0	0		EOT
ENQ	%	0	0	1	0	1	1	0	0	0	0	1	1	1		
ACK	&	0	0	1	1	0	1	0	0	0	0	1	1	1		
BEL	'	0	0	1	1	1	1	0	0	0	0	1	1	1		
BS	(	0	1	0	0	0	1	0	0	0	0	1	1	1		
HT	)	0	1	0	0	1	1	0	0	0	0	1	1	1		
LF	*	0	1	0	1	0	1	0	0	0	0	1	1	1		
VT	+	0	1	0	1	1	1	0	0	0	0	1	1	1		
FF	,	0	1	1	0	0	1	0	0	0	0	1	1	1		
CR	-	0	1	1	0	1	1	0	0	0	0	1	1	1		
SO	.	0	1	1	1	0	1	0	0	0	0	1	1	1		
SI	/	0	1	1	1	1	1	0	0	0	0	1	1	0		(DECODE 6)
DLE	0	1	0	0	0	0	0	1	0	0	0	1	0	1	PRN OFF	DLE
DC1	1	1	0	0	0	1	0	0	1	1	0	0	1	0	REW 1	DC4
DC2	2	1	0	0	1	0	0	0	1	0	1	0	0	1	REW 2	DC2
DC3	3	1	0	0	1	1	0	0	1	0	0	0	1	1	LOAD 1	DC3
DC4	4	1	0	1	0	0	0	0	1	1	1	0	0	0	LOAD 2	DC1
NAK	5	1	0	1	0	1	0	0	0	0	1	1	1	1	CAS1 RCD	
SYN	6	1	0	1	1	0	0	0	0	1	0	1	1	1	CAS2 RCD	
ETB	7	1	0	1	1	1	0	0	0	0	0	1	1	1	BLK FWD	
CAN	8	1	1	0	0	0	0	0	0	1	1	1	1	1	BLK REV	
EM	9	1	1	0	0	1	0	1	0	0	1	1	1	1	PRN ON	
SUB	:	1	1	0	1	0	0	1	1	1	0	1	1	1	DC1-4 ON	
ESC	;	1	1	0	1	1	0	1	1	0	1	1	1	1	DC1-4 OFF	
FS	<	1	1	1	0	0	0	1	1	1	1	1	1	1	STATUS	
GS	=	1	1	1	0	1	0	1	0	1	0	1	1	1	(DECODE 10)	
RS	>	1	1	1	1	0	0	1	0	1	1	1	1	1	(DECODE 11)	
US	?	1	1	1	1	1	0	1	1	0	0	1	1	1	(DECODE 12)	

* R10 NORMALLY INSTALLED

NOTES: (CONTINUED)

9. [illegible] TABLE 5
10. [illegible] SHEET 2 OF THIS SCHEMATIC
11. FOR INFORMATION ON PROGRAMMED PATTERNS AND LABELING OF THE PROM (Z23) SEE SPECIFICATION
12. THE TERMINAL FUNCTIONS PERFORMED BY THE SINGLE AND DOUBLE LEVEL DECODES ARE SHOWN IN TABLE 3
13. STATUS CHARACTER BITS ARE DEFINED IN TABLE 4.

NOTES: (CONTINUED FROM SH 1)

SWITCH S2	DESCRIPTION
1	ENABLE DC2 AND DC4 IN LOCAL
2	ENABLE DC2 AND DC4 FROM RECEIVED DATA
3	ENABLE DC1 AND DC3 IN LOCAL
4	ENABLE DC1 AND DC3 FROM RECEIVED DATA
5	ENABLE DC3 FROM TRANSMITTED DATA

TABLE 1 - OPTION FOR SWITCH S2

8. FOR RDC RESISTOR OPTION, SEE TABLE 2 BELOW:

DESCRIPTION	INSTALL 10 OHM RES	REMOVE 10 OHM RES
A) ENABLE PRINTER DURING SECOND CHARACTER OF REMOTE FUNCTION SEQUENCE		R25
B) DISABLE STATUS CHARACTER		R26, R27
C) DISABLE "DC1-4 OFF" REMOTE FUNCTION		R18
D) DECODE ASCII TABLE COLUMNS 1 AND 2 AS SECOND CHARACTER OF REMOTE FUNCTION SEQUENCE	R11	R10
E) DECODE ASCII TABLE COLUMNS 3 AND 4 AS SECOND CHARACTER OF REMOTE FUNCTION SEQUENCE	R10	R11
F) DISABLE PRINTER ON DC2	BETWEEN E3 AND E4	R14
G) ENABLE PRINTER ON DC4	BETWEEN E1 AND E2	R16
H) DISABLE PRINTER ON REMOTE FUNCTION CODE SEQUENCE	R14	BETWEEN E3 AND E4
I) ENABLE PRINTER ON REMOTE FUNCTION CODE SEQUENCE	R16	BETWEEN E1 AND E2

TABLE 2 - RDC RESISTOR OPTION

TABLE 3

SIGNAL SIGNATURE	TERMINAL FUNCTION
DC1	PLAYBACK ON
DC2	RECORD ON
DC3	PLAYBACK OFF
DC4	RECORD OFF
EOT	AUTOMATIC DISCONNECT BY AUTO ANSWER
DLE	FIRST CHARACTER OF DOUBLE CHARACTER DECODE
(DECODE 6)	SPARE NOT USED
PRN OFF	PRINTER OFF
REW 1	REWIND CASSETTE #1
REW 2	REWIND CASSETTE #2
LOAD 1	LOAD CASSETTE #1
LOAD 2	LOAD CASSETTE #2
CAS1 RCD	CASSETTE #1 RECORD
CAS2 RCD	CASSETTE #2 RECORD
BLK FWD	BLOCK FORWARD
BLK REV	BLOCK REVERSE
PRN ON	PRINTER ON
DC1-4 OFF	DISABLE DC1 THRU DC4 FUNCTION ON RECEIVED DATA
DC1-4 ON	ENABLE DC1 THRU DC4 FUNCTION ON RECEIVED DATA
STATUS	TERMINAL STATUS REQUEST
(DECODE 10)	SPARE NOT USED
(DECODE 11)	SPARE NOT USED
(DECODE 12)	SPARE NOT USED

TABLE 4 (STATUS CHAR)

BIT NO.	FUNCTION
1 (LSB)	PLAYBACK READY
2	[illegible]
3	[illegible] CASSETTE 1
4	[illegible]
5	[illegible]
6	[illegible] READY
7	NONE HIGH OUTPUT
8 (MSB)	NONE HIGH OUTPUT

TABLE 5

ASSEMBLY NO.	ASSEMBLY DESCRIPTION	Z23 PROGRAMMED PATTERN	RESISTORS INSTALLED
960169-0008	RDC FOR 300 BAUD [illegible]	PATTERN 3	[illegible]
0007	[illegible]	[illegible]	[illegible]
0006	[illegible]	[illegible]	[illegible]
0005	[illegible]	[illegible]	[illegible]
0004	RDC CODE 3	PATTERN 3	
0003	RDC CODE 2	PATTERN 2	
0002	RDC CODE 1	PATTERN 1	
960169-0001	RDC NO PROM	SEE NOTE 10	

LIST OF MATERIALS

TEXAS INSTRUMENTS INCORPORATED

[illegible] REMOTE DEVICE CONTROL

971498

SH 2

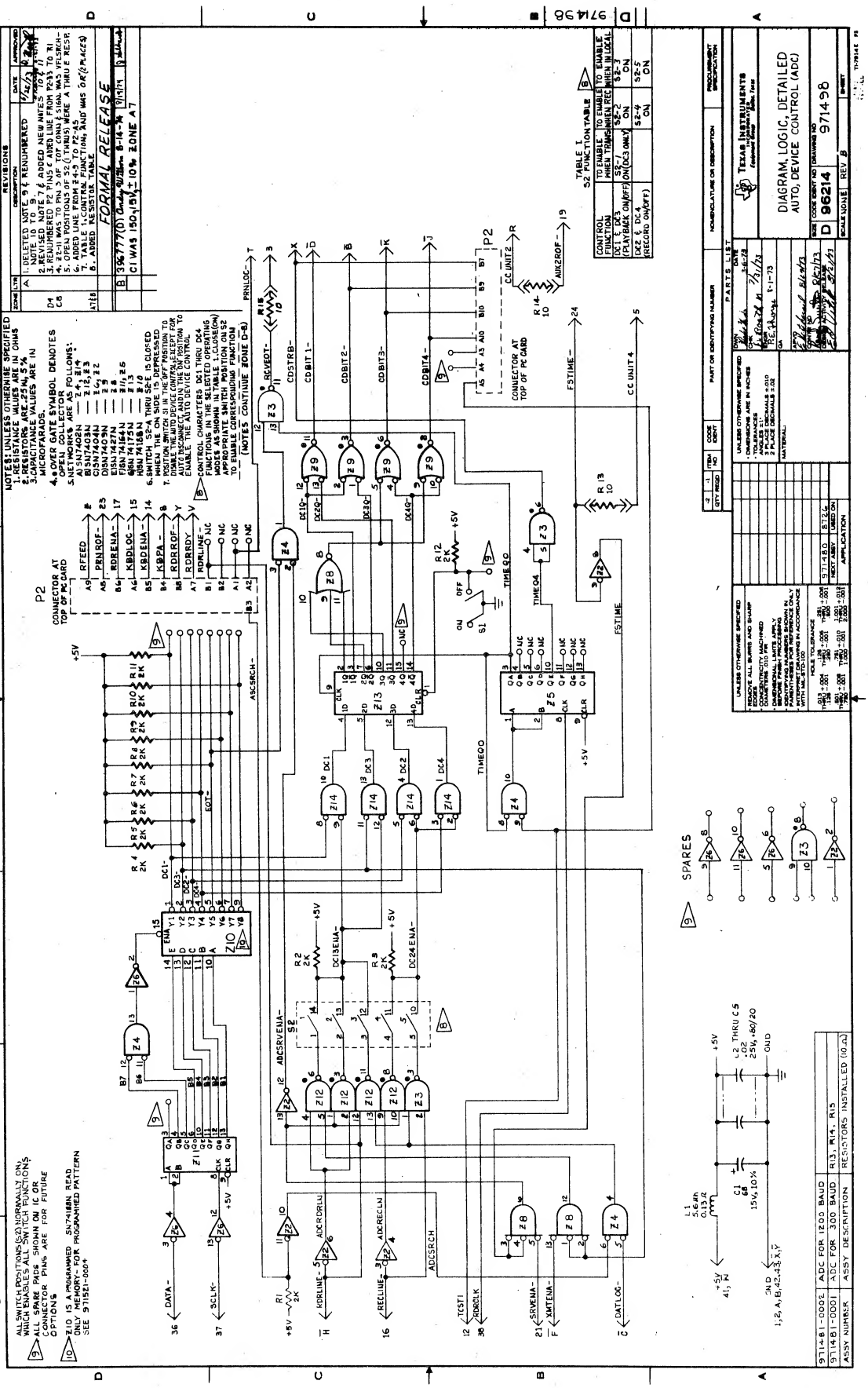
DIAGRAM, LOGIC, DETAILED
AUTO, DEVICE CONTROL (ADC)
971498
D 96214
TEXAS INSTRUMENTS
FORMAL RELEASE
NOTES: UNLESS OTHERWISE SPECIFIED
1. RESISTOR VALUES ARE IN OHMS
2. RESISTORS ARE .25W, 5%
3. CAPACITANCE VALUES ARE IN MICROFARADS.
4. OVER GATE SYMBOL DENOTES OPEN COLLECTOR
5. IC TYPES ARE AS FOLLOWS:
A) SN7402N
B) SN7403N
C) SN7404N
D) SN7409N
E) SN74174N
F) SN74164N
G) SN74175N
H) SN7416BN
6. SWITCH S1A THRU S1E IS CLOSED WHEN THE SLIDE IS DEPRESSED.
7. POSITION SWITCH S1 IN THE OFF POSITION TO DISABLE THE AUTO DEVICE CONTROL-EXCEPT FOR ADC. SWITCH S1 IN THE ON POSITION TO ENABLE THE AUTO DEVICE CONTROL.
8. CONTROL CHARACTERS DC1 THRU DC4 FUNCTIONS IN THE SELECTED OPERATING MODES AS SHOWN IN TABLE 1. CLOSE(ON) TO ENABLE, OPEN(OFF) TO DISABLE.
9. NOTES CONTINUE ZONE D-8
10. Z10 IS A PROGRAMMED SN74188N READ ONLY MEMORY - FOR PROGRAMMED PATTERN SEE 971521-0004
TABLE 1. S2 FUNCTION TABLE
ALL SWITCH POSITIONS SHOWN NORMALLY ON. WHEN VALUES ARE SHOWN FOR S2 FUNCTIONS, ALL SPARE PADS SHOWN ON IC OR CONNECTOR PINS ARE FOR FUTURE OPTIONS
SPARES
971481-0001 ADC FOR 300 BAUD R13, R14, R15
971481-0002 ADC FOR 1200 BAUD
RESISTORS INSTALLED (10 Ω)
FORMAL RELEASE

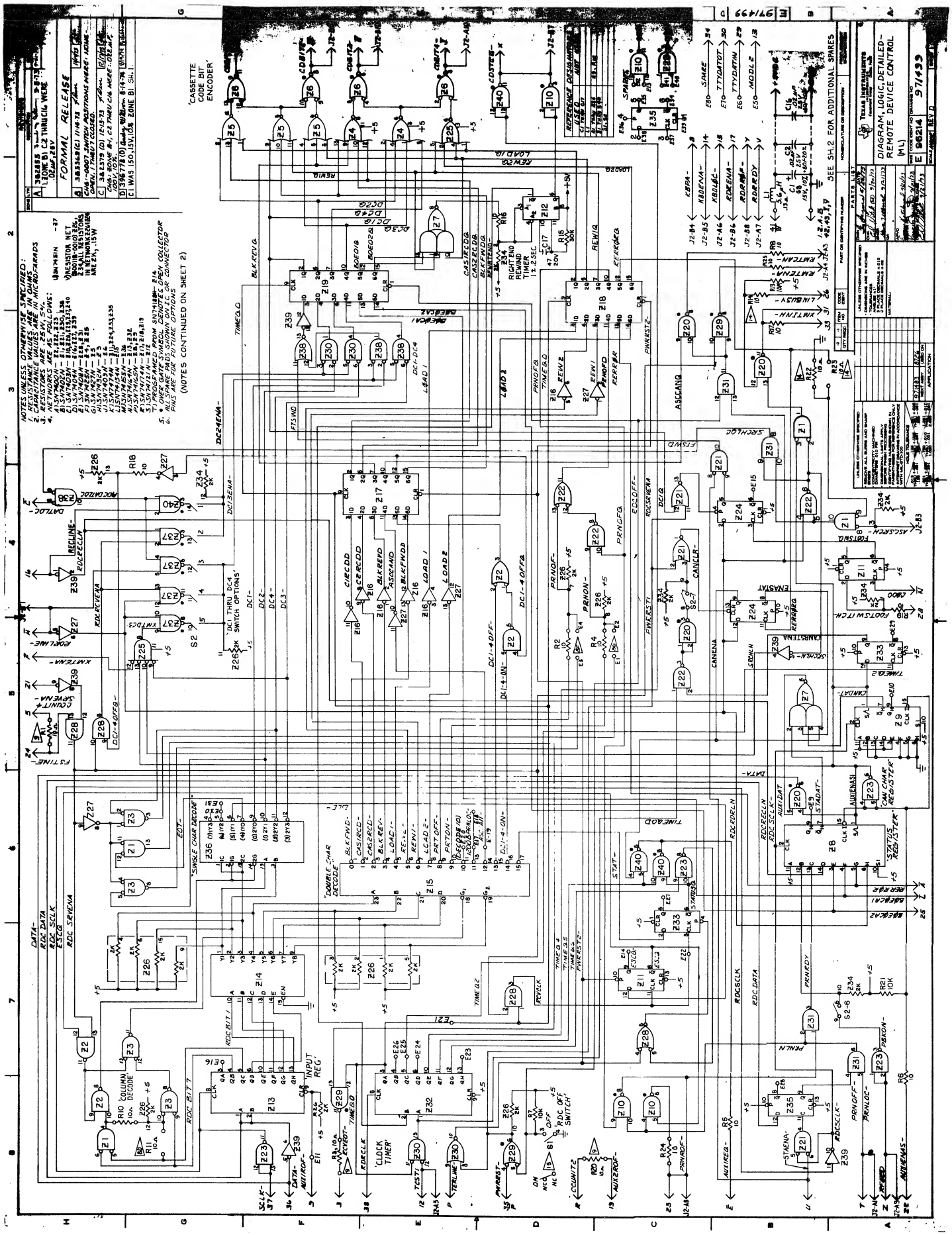

ASCII CHARACTER COLUMN 1 R11 INSTALLED	COLUMN 2 R10* INSTALLED	Z14 PATTERN #1 INPUT ADDRESS E	D	C	B	A	OUTPUT CODE Y8	Y7	Y6	Y5	Y4	Y3	Y2	Y1	SIGNAL SIGNATURE DOUBLE CHAR DECODE (Z15) "DLE__"	SINGLE CHAR DECODE (Z36) (COLUMN 1 CHARS ONLY)
NUL	SPACE	0	0	0	0	0	1	0	0	0	0	1	1	1		
SOH	!	0	0	0	0	1	1	0	0	0	0	1	1	1		
STX	"	0	0	0	1	0	1	0	0	0	0	1	1	1		
ETX	#	0	0	0	1	1	1	0	0	0	0	1	1	1		
EOT	$	0	0	1	0	0	1	0	0	0	0	1	0	0		EOT
ENQ	%	0	0	1	0	1	1	0	0	0	0	1	1	1		
ACK	&	0	0	1	1	0	1	0	0	0	0	1	1	1		
BEL	'	0	0	1	1	1	1	0	0	0	0	1	1	1		
BS	(	0	1	0	0	0	1	0	0	0	0	1	1	1		
HT	)	0	1	0	0	1	1	0	0	0	0	1	1	1		
LF	*	0	1	0	1	0	1	0	0	0	0	1	1	1		
VT	+	0	1	0	1	1	1	0	0	0	0	1	1	1		
FF	,	0	1	1	0	0	1	0	0	0	0	1	1	1		
CR	-	0	1	1	0	1	1	0	0	0	0	1	1	1		
SO	.	0	1	1	1	0	1	0	0	0	0	1	1	1		
SI	/	0	1	1	1	1	1	0	0	0	0	1	1	0		(DECODE 6)
DLE	0	1	0	0	0	0	0	1	0	0	0	1	0	1	PRN OFF	DLE
DC1	1	1	0	0	0	1	0	0	1	1	0	0	0	0	REW 1	DC1
DC2	2	1	0	0	1	0	0	0	1	0	1	0	0	1	REW 2	DC2
DC3	3	1	0	0	1	1	0	0	1	0	0	0	1	1	LOAD 1	DC3
DC4	4	1	0	1	0	0	0	0	1	1	1	0	1	0	LOAD 2	DC4
NAK	5	1	0	1	0	1	0	0	0	0	1	1	1	1	CAS 1 RCD	
SYN	6	1	0	1	1	0	0	0	0	1	0	1	1	1	CAS2 RCD	
ETB	7	1	0	1	1	1	0	0	0	0	0	1	1	1	BLK FWD	
CAN	8	1	1	0	0	0	0	0	0	1	1	1	1	1	BLK REV	
EM	9	1	1	0	0	1	0	1	0	0	1	1	1	1	PRN ON	
SUB	:	1	1	0	1	0	0	1	1	1	0	1	1	1	DC1-4 ON	
ESC	;	1	1	0	1	1	0	1	1	0	1	1	1	1	DC1-4 OFF	
FS	<	1	1	1	0	0	0	1	1	1	1	1	1	1	STATUS	
GS	=	1	1	1	0	1	0	1	0	1	0	1	1	1	(DECODE 10)	
RS	>	1	1	1	1	0	0	1	0	1	1	1	1	1	1200 B PRNLOC	
US	?	1	1	1	1	1	0	1	1	0	0	1	1	1	ASCCAN	

ASCII CHARACTER COLUMN 1 R11 INSTALLED	COLUMN 2 R10* INSTALLED	Z14 PATTERN #3 INPUT ADDRESS E	D	C	B	A	OUTPUT CODE Y8	Y7	Y6	Y5	Y4	Y3	Y2	Y1	SIGNAL SIGNATURE DOUBLE CHAR DECODE (Z15) "DLE__"	SINGLE CHAR DECODE (Z36) (COLUMN 1 CHARS ONLY)
NUL	SPACE	0	0	0	0	0	1	0	0	0	0	1	1	1		
SOH	!	0	0	0	0	1	1	0	0	0	0	0	0	0		DC1
STX	"	0	0	0	1	0	1	0	0	0	0	1	1	1		
ETX	#	0	0	0	1	1	1	0	0	0	0	1	1	1		
EOT	$	0	0	1	0	0	1	0	0	0	0	1	0	0		EOT
ENQ	%	0	0	1	0	1	1	0	0	0	0	1	1	1		
ACK	&	0	0	1	1	0	1	0	0	0	0	1	1	1		
BEL	'	0	0	1	1	1	1	0	0	0	0	1	1	1		
BS	(	0	1	0	0	0	1	0	0	0	0	1	1	1		
HT	)	0	1	0	0	1	1	0	0	0	0	1	1	1		
LF	*	0	1	0	1	0	1	0	0	0	0	1	1	1		
VT	+	0	1	0	1	1	1	0	0	0	0	1	1	1		
FF	,	0	1	1	0	0	1	0	0	0	0	1	1	1		
CR	-	0	1	1	0	1	1	0	0	0	0	1	1	1		
SO	.	0	1	1	1	0	1	0	0	0	0	1	1	1		
SI	/	0	1	1	1	1	1	0	0	0	0	1	1	1		
DLE	0	1	0	0	0	0	0	1	0	0	0	1	0	1	PRN OFF	DLE
DC1	1	1	0	0	0	1	0	0	1	1	0	1	1	0	REW 1	(DECODE 6)
DC2	2	1	0	0	1	0	0	0	1	0	1	0	0	1	REW 2	DC2
DC3	3	1	0	0	1	1	0	0	1	0	0	0	1	1	LOAD 1	DC3
DC4	4	1	0	1	0	0	0	0	1	1	1	0	1	0	LOAD 2	DC4
NAK	5	1	0	1	0	1	0	0	0	0	1	1	1	1	CAS 1 RCD	
SYN	6	1	0	1	1	0	0	0	0	1	0	1	1	1	CAS 2 RCD	
ETB	7	1	0	1	1	1	0	0	0	0	0	1	1	1	BLK FWD	
CAN	8	1	1	0	0	0	0	0	0	1	1	1	1	1	BLK REV	
EM	9	1	1	0	0	1	0	1	0	0	1	1	1	1	PRN ON	
SUB	:	1	1	0	1	0	0	1	1	1	0	1	1	1	DC1-4 ON	
ESC	;	1	1	0	1	1	0	1	1	0	1	1	1	1	DC1-4 OFF	
FS	<	1	1	1	0	0	0	1	1	1	1	1	1	1	STATUS	
GS	=	1	1	1	0	1	0	1	0	1	0	1	1	1	(DECODE 10)	
RS	>	1	1	1	1	0	0	1	0	1	1	1	1	1	1200 B PRNLOC	
US	?	1	1	1	1	1	0	1	1	0	0	1	1	1	ASCCAN	

NOTES: (CONTINUED FROM SHEET 1)

7. FOR SWITCH (S2) OPTIONS SEE TABLE BELOW:

SWITCH S2	DESCRIPTION
1	ENABLE DC2 AND DC4 IN LOCAL
2	ENABLE DC2 AND DC4 FROM RECEIVED DATA
3	ENABLE DC1 AND DC3 IN LOCAL
4	ENABLE DC1 AND DC3 FROM RECEIVED DATA
5	ENABLE DC3 FROM TRANSMITTED DATA
6	ENABLE PLAYBACK ***OFF*** INDICATION TO BIT 7 OF STATUS CHAR.
7	ENABLE AUTO 'CAN' CHAR. ON PLAYBACK ERROR OPTION

8. FOR RDC RESISTOR OPTION SEE TABLE 2 BELOW:

TABLE 2

DESCRIPTION	INSTALL 10 OHM RES	REMOVE 10 OHM RES
A) ENABLE PRINTING ***OF SECOND*** CHARACTER OF REMOTE ***SEQUENCE***		R24
B) DISABLE STATUS AND 'CAN' CHARACTER		R5 & R6
C) DISABLE "DC1-4 OFF" ***DECODE OF REMOTE SEQUENCE***		R18
8D > DECODE ASCII ***CHARACTERS COLUMN 1 PER TABLE, AS 2ND*** CHARACTER OF REMOTE FUNCTION SEQUENCE	R11	R10
E) DECODE ASCII ***CHARACERS PER TABLE, COLUMN 2 AS SECOND*** CHARACTER OF REMOTE FUNCTION SEQUENCE	R10	R11
8F > DISABLE PRINTER ON DC2	BETWEEN E3 AND E4	R2
8G > ENABLE PRINTER ON DC4	BETWEEN E1 AND E2	R4
H) DISABLE PRINTER ***WITH A REMOTE*** CODE SEQUENCE	R2	BETWEEN E3 AND E4
I) ENABLE PRINTER ***WITH A REMOTE*** CODE SEQUENCE	R4	BETWEEN E1 AND E2
J) DISABLE PRINTER ON/OFF REMOTE FUNCTION		R2 & R4 OR RES BETWEEN E1 & E2 AND E3 & E4
K) ENABLE FOOTSWITCH OPTION TO J2 CONN.(J2-L)	R19	
L) ENABLE REMOTE SEARCH WITH ASC	R8 & R25	
M) ENABLE REMOTE SEARCH WITH ASC(1200 B)	R8, R25, & R17	
N) ENABLE REWIND FROM THE RIGHT END	R16	

9 > FOR USE WITH 300 BAUD AUTO ANSWER, 10 OHM RESISTORS ARE INSTALLED FOR R20, R1 & R3 AS DEFINED BY THE RDC ASSEMBLY CHART SHOWN IN "TABLE 5"

10. DASH 01 OF THIS ASSEMBLY DO NOT INCLUDE Z14 (SN74188 PROM); SUBSEQUENT DASH NO'S INCLUDE THE PROM WITH THE SPECIFIC PROGRAMMED PATTERN SHOWN ON SHEET 2 OF THIS SCHEMATIC

11. FOR INFORMATION ON PROGRAMMED PATTERNS AND LABELING OF THE PROM (Z14. SEE SPECIFICATION 971521

12. THE TERMINAL FUNCTIONS PERFORMED BY THE SINGLE AND DOUBLE LEVEL DECODES ARE SHOWN IN TABLE 3

13. STATUS CHARACTER BITS ARE DEFINED IN TABLE 4

14 > R23 NOT USED (10 Ω), R14 & R22 ALWAYS INSTALLED (10 Ω)

15 > SWITCH S1 WHEN OFF, RESETS ALL LATCHES AND LOGIC AND DISABLES THE ENTIRE RDC CARD EXCEPT FOR THE DECODING OF THE LINE DISCONNECT CODE (USUALLY EOT) FOR THE AUTO ANSWER CARD.

16. BRINGING PIN 3 (AUXIROF-) TO LOGIC '0' DISABLES THE RDC CARD FROM INITIATING ANY ACTION DUE TO DECODING OF COMMAND CHARACTER FROM THE SERIAL BUS. IT WILL NOT RESET ANY LATCHES NOR DISABLE ASC REMOTE SEARCH ENABLE OR THE AUTO 'CAN' CHAR. OPTION, OR THE FOOT SWITCH OPTION.

ASCII CHARACTER COLUMN 1 R11 INSTALLED	COLUMN 2 R10* INSTALLED	Z14 PATTERN #2 INPUT ADDRESS E	D	C	B	A	OUTPUT CODE Y8	Y7	Y6	Y5	Y4	Y3	Y2	Y1	SIGNAL SIGNATURE DOUBLE CHAR DECODE (Z15) "DLE__"	SINGLE CHAR DECODE (Z36) (COLUMN 1 CHARS ONLY)
NUL	SPACE	0	0	0	0	0	1	0	0	0	0	1	1	1		
SOH	!	0	0	0	0	1	1	0	0	0	0	1	1	1		
STX	"	0	0	0	1	0	1	0	0	0	0	1	1	1		
ETX	#	0	0	0	1	1	1	0	0	0	0	1	1	1		
EOT	$	0	0	1	0	0	1	0	0	0	0	1	0	0		EOT
ENQ	%	0	0	1	0	1	1	0	0	0	0	1	1	1		
ACK	&	0	0	1	1	0	1	0	0	0	0	1	1	1		
BEL	'	0	0	1	1	1	1	0	0	0	0	1	1	1		
BS	(	0	1	0	0	0	1	0	0	0	0	1	1	1		
HT	)	0	1	0	0	1	1	0	0	0	0	1	1	1		
LF	*	0	1	0	1	0	1	0	0	0	0	1	1	1		
VT	+	0	1	0	1	1	1	0	0	0	0	1	1	1		
FF	,	0	1	1	0	0	1	0	0	0	0	1	1	1		
CR	-	0	1	1	0	1	1	0	0	0	0	1	1	1		
SO	.	0	1	1	1	0	1	0	0	0	0	1	1	1		
SI	/	0	1	1	1	1	1	0	0	0	0	1	1	0		(DECODE 6)
DLE	0	1	0	0	0	0	0	1	0	0	0	1	0	1	PRN OFF	DLE
DC1	1	1	0	0	0	1	0	0	1	1	0	0	1	0	REW 1	DC4
DC2	2	1	0	0	1	0	0	0	1	0	1	0	0	1	REW 2	DC2
DC3	3	1	0	0	1	1	0	0	1	0	0	0	1	1	LOAD 1	DC3
DC4	4	1	0	1	0	0	0	0	1	1	1	0	0	0	LOAD 2	DC1
NAK	5	1	0	1	0	1	0	0	0	0	1	1	1	1	CAS1 RCD	
SYN	6	1	0	1	1	0	0	0	0	1	0	1	1	1	CAS2 RCD	
ETB	7	1	0	1	1	1	0	0	0	0	0	1	1	1	BLK FWD	
CAN	8	1	1	0	0	0	0	0	0	1	1	1	1	1	BLK REV	
EM	9	1	1	0	0	1	0	1	0	0	1	1	1	1	PRN ON	
SUB	:	1	1	0	1	0	0	1	1	1	0	1	1	1	DC1-4 ON	
ESC	;	1	1	0	1	1	0	1	1	0	1	1	1	1	DC1-4 OFF	
FS	<	1	1	1	0	0	0	1	1	1	1	1	1	1	STATUS	
GS	=	1	1	1	0	1	0	1	0	1	0	1	1	1	(DECODE 10)	
RS	>	1	1	1	1	0	0	1	0	1	1	1	1	1	1200 B PRNLOC	
US	?	1	1	1	1	1	0	1	1	0	0	1	1	1	ASCCAN	

* R10 NORMALLY INSTALLED

ASCII CHARACTER COLUMN 1 R11 INSTALLED	COLUMN 2 R10* INSTALLED	Z14 PATTERN #4 INPUT ADDRESS E	D	C	B	A	OUTPUT CODE Y8	Y7	Y6	Y5	Y4	Y3	Y2	Y1	SIGNAL SIGNATURE DOUBLE CHAR DECODE (Z15) "DLE__"	SINGLE CHAR DECODE (Z36) (COLUMN 1 CHARS ONLY)
NUL	SPACE	0	0	0	0	0	1	0	0	0	0	1	1	1		
SOH	!	0	0	0	0	1	1	0	0	0	0	1	1	1		
STX	"	0	0	0	1	0	1	0	0	0	0	1	1	1		
ETX	#	0	0	0	1	1	1	0	0	0	0	0	1	1		DC3
EOT	$	0	0	1	0	0	1	0	0	0	0	1	0	0		EOT
ENQ	%	0	0	1	0	1	1	0	0	0	0	1	1	1		
ACK	&	0	0	1	1	0	1	0	0	0	0	1	1	1		
BEL	'	0	0	1	1	1	1	0	0	0	0	1	1	1		
BS	(	0	1	0	0	0	1	0	0	0	0	1	1	1		
HT	)	0	1	0	0	1	1	0	0	0	0	1	1	1		
LF	*	0	1	0	1	0	1	0	0	0	0	1	1	1		
VT	+	0	1	0	1	1	1	0	0	0	0	1	1	1		
FF	,	0	1	1	0	0	1	0	0	0	0	1	1	1		
CR	-	0	1	1	0	1	1	0	0	0	0	1	1	1		
SO	.	0	1	1	1	0	1	0	0	0	0	1	1	1		
SI	/	0	1	1	1	1	1	0	0	0	0	1	1	0		(DECODE 6)
DLE	0	1	0	0	0	0	0	1	0	0	0	1	0	1	PRN OFF	DLE
DC1	1	1	0	0	0	1	0	0	1	1	0	0	0	0	REW 1	DC1
DC2	2	1	0	0	1	0	0	0	1	0	1	0	0	1	REW 2	DC2
DC3	3	1	0	0	1	1	0	0	1	0	0	0	1	1	LOAD 1	DC3
DC4	4	1	0	1	0	0	0	0	1	1	1	0	1	0	LOAD 2	DC4
NAK	5	1	0	1	0	1	0	0	0	0	1	1	1	1	CAS1 RCD	
SYN	6	1	0	1	1	0	0	0	0	1	0	1	1	1	CAS2 RCD	
ETB	7	1	0	1	1	1	0	0	0	0	0	1	1	1	BLK FWD	
CAN	8	1	1	0	0	0	0	0	0	1	1	1	1	1	BLK REV	
EM	9	1	1	0	0	1	0	1	0	0	1	1	1	1	PRN ON	
SUB	:	1	1	0	1	0	0	1	1	1	0	1	1	1	DC1-4 ON	
ESC	;	1	1	0	1	1	0	1	1	0	1	1	1	1	DC1-4 OFF	
FS	<	1	1	1	0	0	0	1	1	1	1	1	1	1	STATUS	
GS	=	1	1	1	0	1	0	1	0	1	0	1	1	1	(DECODE 10)	
RS	>	1	1	1	1	0	0	1	0	1	1	1	1	1	1200 B PRNLOC	
US	?	1	1	1	1	1	0	1	1	0	0	1	1	1	ASCCAN	

TABLE 3
TERMINAL REMOTE FUNCTIONS

SIGNAL SIGNATURE	TERMINAL FUNCTION
DC1	PLAYBACK ON
DC2	RECORD ON
DC3	PLAYBACK OFF
DC4	RECORD OFF
EOT	AUTOMATIC DISCONNECT BY AUTO ANSWER
DLE	FIRST CHARACTER OF DOUBLE CHARACTER DECODE
(DECODE 6)	SPARE NOT USED
PRNOFF	PRINTER OFF
REW1	REWIND CASSETTE #1
REW2	REWIND CASSETTE #2
LOAD 1	LOAD CASSETTE #1
LOAD 2	LOAD CASSETTE #2
CAS1 RCD	CASSETTE #1 RECORD
CAS2 RCD	CASSETTE #2 RECORD
BLKFWD	BLOCK FORWARD
BLK REV	BLOCK REVERSE
PRNON	PRINTER ON
DC1-4 OFF	DISABLE DC1-THRU DC4 FUNCTION ON RECEIVED DATA
DC1-4 ON	ENABLE DC1-THRU DC4 FUNCTION ON RECEIVED DATA
STATUS	TERMINAL STATUS REQUST
(DECODE 10)	SPARE NOT USED
1200 PRNLOC	*FUTURE 1200 B OPTION*
ASCCAN	*CANCEL ASC REMOTE SEARCH*

TABLE 4 (STATUS CHAR)

BIT NO.	FUNCTION
1 (LSB)	PLAYBACK READY
2	PLAYBACK ERROR
3	CLEAR LEADER CASSETTE 1
4	CLEAR LEADER CASSETTE 2
5	RECORDER READY
6	PRINTER READY
7	HIGH OR PLAYBACK NOT ON (S2-6)
8 (MSB)	NONE-HIGH OUTPUT

SPARES

TABLE 5

ASSY NUMBER	ASSY DESCRIPTION		PROGRAMMED PATTERN Z14	10Ω RESISTORS INSTALLED	RES. INSTALL	BETWEEN	S2 SWITCH POSITIONS OPEN	CLOSED
971483-0007	RDC 1200 BAUD CODE 4		PATTERN 4	R2,R3,R4,R5,R6,R10, R16,R18,R24			6	1-5,7
-0006	1200	COMPUTER OPTION	1	R5,R6,R8,R10,R16,R17, R18,R19,R24,R25	R2 / R4	E3 & E4 / E1 & E2	6 & 7	1-5
-0005	300	CODE 3	3	R1,R2,R3,R4,R5,R6,R8,R10 R16,R18,R19,R20,R24,R25				
-0004	300	CODE 2	2	R1,R2,R3,R4,R5,R6,R8,R10 R16,R18,R19,R20,R24,R25				
-0003	1200	CODE 1	1	R2,R4,R5,R6,R8,R10, R16,R17,R18,R19,R24,R25				
-0002	RDC 300 BAUD CODE 1		PATTERN 1	R1,R2,R3,R4,R5,R6,R8,R10 R16,R18,R19,R20,R24,R25				
971483-0001	RDC, NO PROM		SEE NOTE 10	R1,R2,R3,R4,R5,R6,R8,R10 R16,R17,R18,R19,R20,R24,R25			6 & 7	1-5

LIST OF MATERIALS

TEXAS INSTRUMENTS INCORPORATED

ELTU SCHEMATIC DIAGRAM, REMOTE DEVICE CONTROL (ML)

E 971499

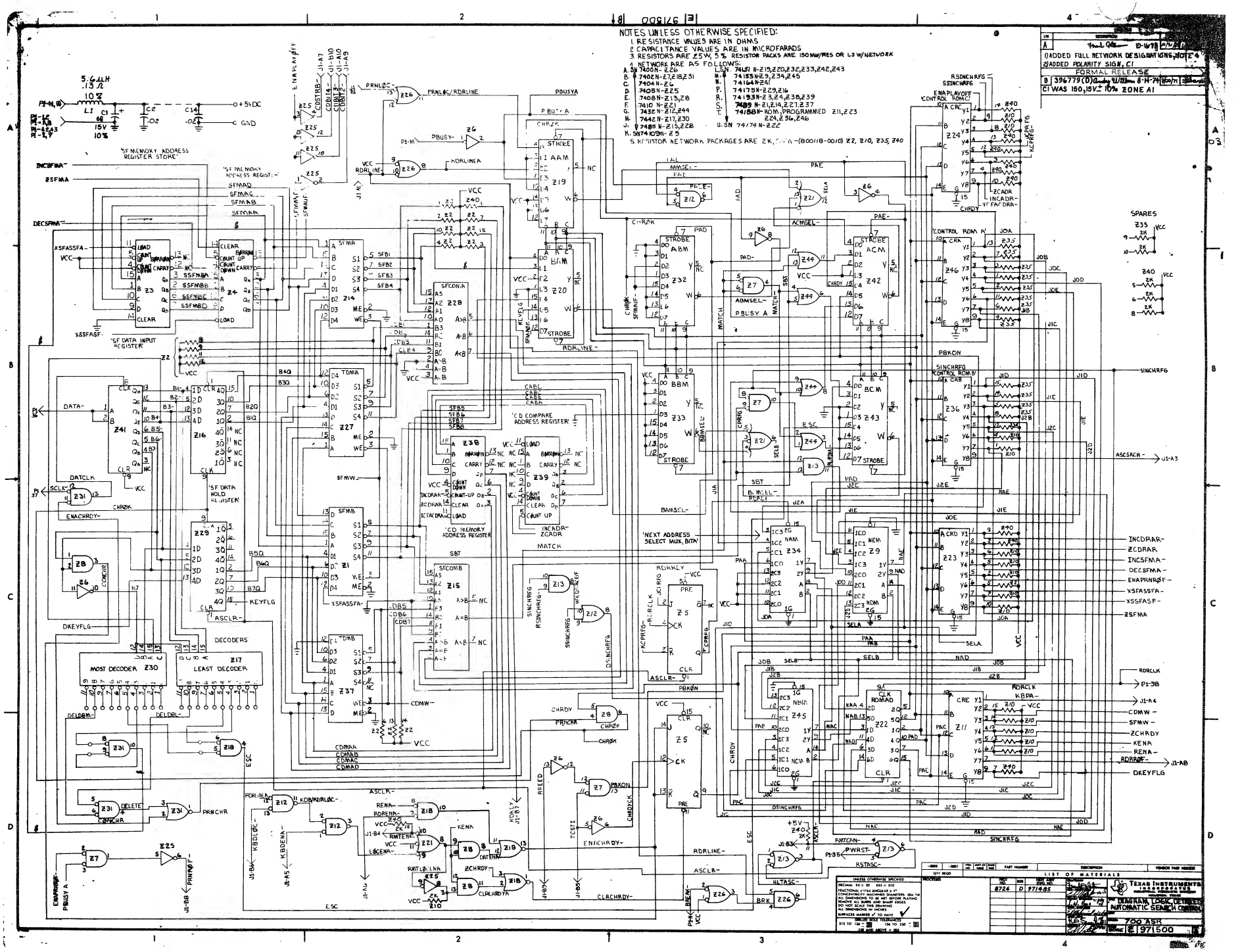
NOTES UNLESS OTHERWISE SPECIFIED:
1. RESISTANCE VALUES ARE IN OHMS
2 CAPACITANCE VALUES ARE IN MICROFARADS
3. RESISTORS ARE .25W, 5% RESISTOR PACKS ARE 150mW/RES OR 1.5 W/NETWORK
4. NETWORKS ARE AS FOLLOWS:
A. SN 74008 N-Z26
B. 74021 N-Z7,Z18,Z31
C. 7404 N-Z6
D. 74081 N-Z25
E. 7408 N-Z13,Z8
F. 7410 N-Z21
G. 7432 N-Z12,Z44
H. 7442 N-Z17,Z30
J. 74851 N-Z5,Z28
K. SN74109N-Z5
LSN 74S51 N-Z19,Z20,Z32,Z33,Z42,Z43
M. 74153 N-Z9,Z34,Z45
N. 74164 N-Z41
P. 74175N-Z29,Z16
R. 74193N-Z3,Z4,Z38,Z39
S. 7489 N-Z1,Z14,Z27,Z37
T. 74188N-ROM, PROGRAMMED Z11,Z23 Z24,Z36,Z46
U. SN 74174 N-Z22
5. RESISTOR NETWORK PACKAGES ARE 2K, (800118-0010) Z2, Z10, Z35, Z40
ADDED FULL NETWORK DESIGNATIONS, NOTE 4
ADDED POLARITY SIGN, C1
FORMAL RELEASE
C1 WAS 150,15V ± 10% ZONE A1
'SF MEMORY ADDRESS REGISTER STORE'
'SF DATA INPUT REGISTER'
'SF DATA HOLD REGISTER'
'CD COMPARE ADDRESS REGISTER'
'CD MEMORY ADDRESS REGISTER'
'NEXT ADDRESS SELECT MUX, BITA'
DECODERS
MOST DECODER Z30
LEAST DECODER Z17
SPARES
CONTROL ROM A
CONTROL ROM B
ENAPLAYOFF CONTROL ROM
SSINCHRFG CONTROL ROM
SINCHRFG CONTROL ROM
ASCSRCH-
INCDRAR-
ZCDRAR
INCSFMA-
DECSFMA-
ENAPRNRØF-
XSFASSFA-
XSSFASF-
ZSFMA
RDRCLK
CDMW-
SFMW-
ZCHRDY
KENA
RENA-
RDRAØF-
DKEYFLG
SINCHRFG
PRNCHR
ESC
DELDBH-
DELDBL-
CLEARDRYA
PWRST-
RSTASC-
HLTASC-
BRK-
RMTCAN-
RMTCLK
RMTENA-
LOCENA-
KBDBL0C-
KBDBENA-
KDBYA
KDBYB
RDBENA-
DATENA
ENICHRDY-
CLRCHRDY-
TABLE OF CONTENTS
LIST OF MATERIALS
TEXAS INSTRUMENTS
INCORPORATED
DALLAS, TEXAS
TEXAS INSTRUMENTS
AUTOMATIC SEARCH COMPANY
700 ASR
971500
8724
D
97/485

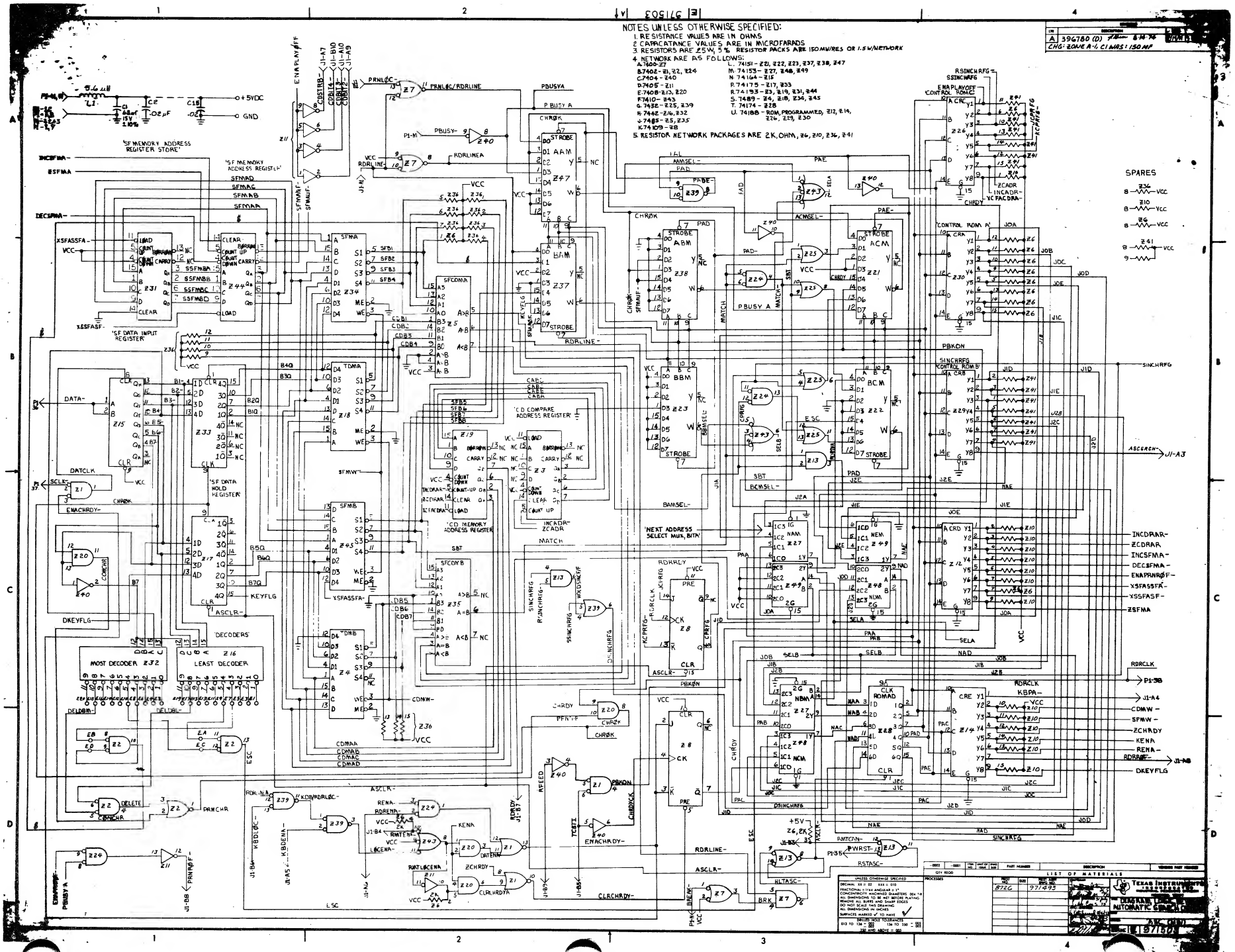
NOTES UNLESS OTHERWISE SPECIFIED:
1. RESISTANCE VALUES ARE IN OHMS
2. CAPACITANCE VALUES ARE IN MICROFARADS
3. RESISTORS ARE .25W, 5% RESISTOR PACKS ARE 150MW/RES OR 1.5W/NETWORK
4. NETWORK ARE AS FOLLOWS:
A. 7400 - Z7
B. 7402 - Z1, Z2, Z24
C. 7404 - Z40
D. 7405 - Z11
E. 7408 - Z13, Z20
F. 7410 - Z43
G. 7432 - Z25, Z39
H. 7442 - Z16, Z32
J. 7485 - Z5, Z35
K. 74109 - Z8
L. 74151 - Z21, Z22, Z23, Z37, Z38, Z47
M. 74153 - Z27, Z48, Z49
N. 74164 - Z15
P. 74175 - Z17, Z33
R. 74153 - Z3, Z19, Z31, Z44
S. 7489 - Z4, Z18, Z34, Z45
T. 74174 - Z28
U. 74188 - ROM, PROGRAMMED, Z12, Z14, Z26, Z29, Z30
5. RESISTOR NETWORK PACKAGES ARE 2K, OHM, Z6, Z10, Z36, Z41
SPARES
Z34
Z10
Z6
Z41
'SF MEMORY ADDRESS REGISTER STORE'
'SF MEMORY ADDRESS REGISTER'
'SF DATA INPUT REGISTER'
'SF DATA HOLD REGISTER'
'CD COMPARE ADDRESS REGISTER'
'CD MEMORY ADDRESS REGISTER'
'NEXT ADDRESS SELECT MUX, BITN'
'DECODERS'
MOST DECODER Z32
LEAST DECODER Z16
'CONTROL ROM A'
'CONTROL ROM B'
+0.5VDC
GND
SFMA
SFMB
SFCDMA
SFCDMB
TDMA
TDMB
BAM
BBM
ACM
BCM
ROMAD
NAM
NBM
NCM
NAMA
NBMA
NCMA
NDMA
NEMA
CRA
CRB
CRC
CRD
CRE
PBKON
PBUSY A
RDRLINE
ASCLR-
ENACHRDY-
CHRDY
CHRØK
MATCH
DATA-
DATCLK
SCLK-
KEYFLG
DKEYFLG
PRMCHR
RSTASC-
RTLTASC-
CLRCHRDY-
RDRCLK
KBPA-
CDMW-
SFMW-
ZCHRDY
KENA-
RENA-
RDRØF-
DKEYFLG
INCDRAR-
ZCDRAR
INCSFMA-
DECSFMA-
ENAPRNRØF-
XSFASSFA-
XSSFASF-
ZSFMA
ASCREN-
SINCHRFG
RSINCHRFG
SSINCHRFG
ENAPLAYOFF
'CONTROL ROM C'
ZCADR
INCADR-
'CD MEMORY ADDRESS REGISTER'
'SF MEMORY ADDRESS REGISTER'
'SF DATA INPUT REGISTER'
'SF DATA HOLD REGISTER'
'CD COMPARE ADDRESS REGISTER'
'NEXT ADDRESS SELECT MUX, BITN'
'DECODERS'
'CONTROL ROM A'
'CONTROL ROM B'
'CONTROL ROM C'
SPARES
TEXAS INSTRUMENTS
DALLAS, TEXAS
AUTOMATIC SPEECH
LIST OF MATERIALS
396780 (D)
8-14-76
CHG: ZONE A-1, C1 WAS 150 MF

C-56

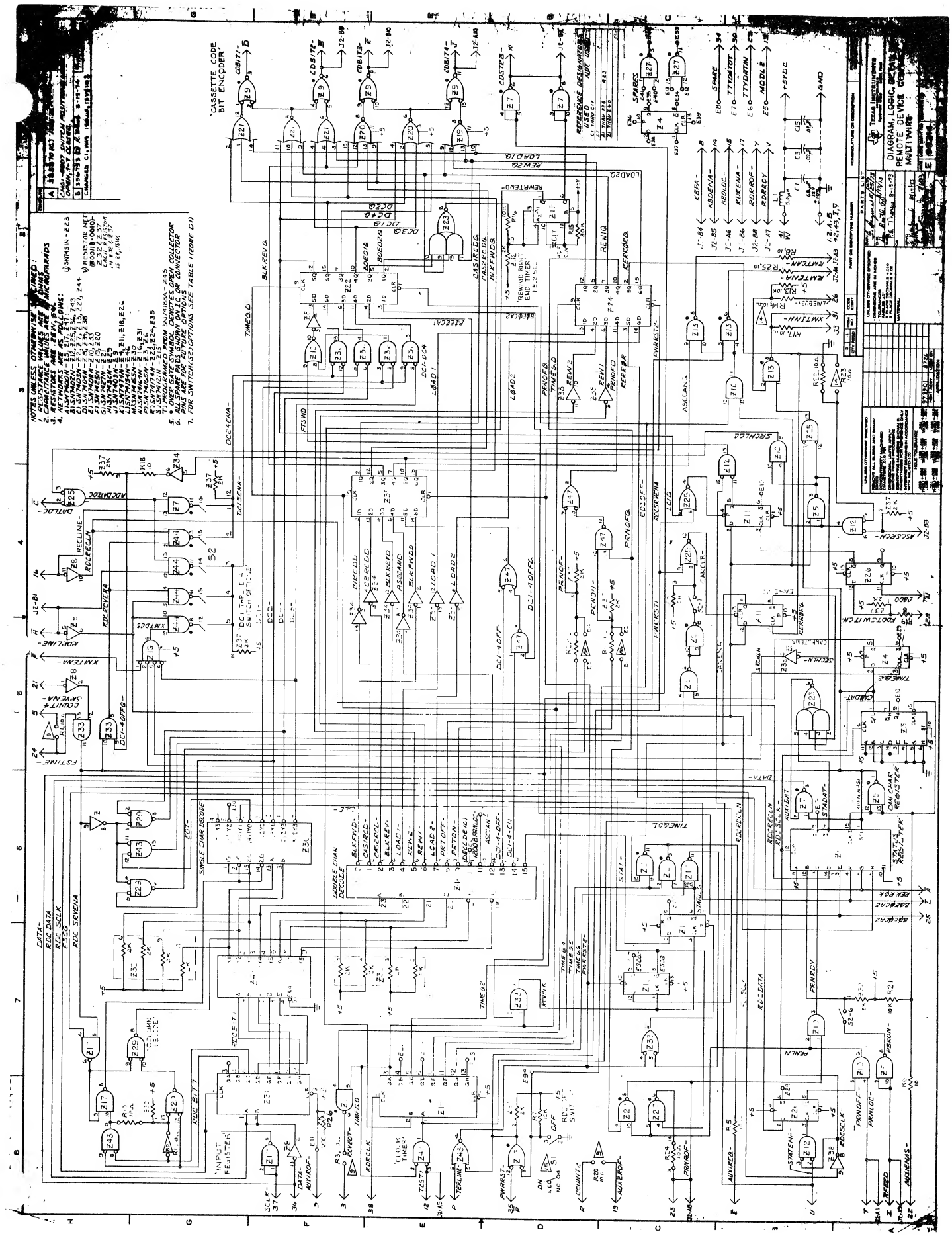

E 971504 B

ASCII CHARACTER COLUMN 1 R11 INSTALLED	COLUMN 2 R10* INSTALLED	Z45 PATTERN #1 INPUT ADDRESS E	D C B A	OUTPUT CODE Y8 Y7 Y6 Y5 Y4 Y3 Y2 Y1	SIGNAL SIGNATURE DOUBLE CHAR DECODE (Z46) DLE __	SINGLE CHAR DECODE (Z30) (COLUMN 1 CHARS ONLY)
NUL	SPACE	0	0000	10000111		
SOH	!	0	0001	10000111		
STX	"	0	0010	10000111		
ETX	#	0	0011	10000111		
EOT	$	0	0100	10000100		EOT
ENQ	%	0	0101	10000111		
ACK	&	0	0110	10000111		
BEL	'	0	0111	10000111		
BS	(	0	1000	10000111		
HT	)	0	1001	10000111		
LF	*	0	1010	10000111		
VT	+	0	1011	10000111		
FF	,	0	1100	10000111		
CR	-	0	1101	10000111		
SO	.	0	1110	10000111		
SI	/	0	1111	10000110		(DECODE 6)
DLE	0	1	0000	01000101	PRN OFF	DLE
DC1	1	1	0001	00110000	REW 1	DC1
DC2	2	1	0010	00101001	REW 2	DC2
DC3	3	1	0011	00100011	LOAD 1	DC3
DC4	4	1	0100	00111010	LOAD 2	DC4
NAK	5	1	0101	00001111	CAS1 RCD	
SYN	6	1	0110	00010111	CAS2 RCD	
ETB	7	1	0111	00000111	BLK FWD	
CAN	8	1	1000	00011111	BLK REV	
EM	9	1	1001	01001111	PRN ON	
SUB	:	1	1010	01110111	DC1-4 ON	
ESC	;	1	1011	01101111	DC1-4 OFF	
FS	<	1	1100	01111111	STATUS	
GS	=	1	1101	01010111	(DECODE 10)	
RS	>	1	1110	01011111	1200 B PRNLOC	
US	?	1	1111	01100111	ASCCAN	

ASCII CHARACTER COLUMN 1 R11 INSTALLED	COLUMN 2 R10* INSTALLED	Z45 PATTERN #2 INPUT ADDRESS E	D C B A	OUTPUT CODE Y8 Y7 Y6 Y5 Y4 Y3 Y2 Y1	SIGNAL SIGNATURE DOUBLE CHAR DECODE (Z46) DLE __	SINGLE CHAR DECODE (Z30) (COLUMN 1 CHARS ONLY)
NUL	SPACE	0	0000	10000111		
SOH	!	0	0001	10000111		
STX	"	0	0010	10000111		
ETX	#	0	0011	10000111		
EOT	$	0	0100	10000100		EOT
ENQ	%	0	0101	10000111		
ACK	&	0	0110	10000111		
BEL	'	0	0111	10000111		
BS	(	0	1000	10000111		
HT	)	0	1001	10000111		
LF	*	0	1010	10000111		
VT	+	0	1011	10000111		
FF	,	0	1100	10000111		
CR	-	0	1101	10000111		
SO	.	0	1110	10000111		
SI	/	0	1111	10000110		(DECODE 6)
DLE	0	1	0000	01000101	PRN OFF	DLE
DC1	1	1	0001	00110010	REW 1	DC4
DC2	2	1	0010	00101001	REW 2	DC2
DC3	3	1	0011	00100011	LOAD 1	DC3
DC4	4	1	0100	00111000	LOAD 2	DC1
NAK	5	1	0101	00001111	CAS1 RCD	
SYN	6	1	0110	00010111	CAS2 RCD	
ETB	7	1	0111	00000111	BLK FWD	
CAN	8	1	1000	00011111	BLK REV	
EM	9	1	1001	01001111	PRN ON	
SUB	:	1	1010	01110111	DC1-4 ON	
ESC	;	1	1011	01101111	DC1-4 OFF	
FS	<	1	1100	01111111	STATUS	
GS	=	1	1101	01010111	(DECODE 10)	
RS	>	1	1110	01011111	1200 B PRNLOC	
US	?	1	1111	01100111	ASCCAN	

* R10 NORMALLY INSTALLED

ASCII CHARACTER COLUMN 1 R11 INSTALLED	COLUMN 2 R10* INSTALLED	Z45 PATTERN #3 INPUT ADDRESS E	D C B A	OUTPUT CODE Y8 Y7 Y6 Y5 Y4 Y3 Y2 Y1	SIGNAL SIGNATURE DOUBLE CHAR DECODE (Z46) "DLE __"	SINGLE CHAR DECODE (Z30) (COLUMN 1 CHARS ONLY)
NUL	SPACE	0	0000	10000111		
SOH	!	0	0001	10000000		DC1
STX	"	0	0010	10000111		
ETX	#	0	0011	10000111		
EOT	$	0	0100	10000100		EOT
ENQ	%	0	0101	10000111		
ACK	&	0	0110	10000111		
BEL	'	0	0111	10000111		
BS	(	0	1000	10000111		
HT	)	0	1001	10000111		
LF	*	0	1010	10000111		
VT	+	0	1011	10000111		
FF	,	0	1100	10000111		
CR	-	0	1101	10000111		
SO	.	0	1110	10000111		
SI	/	0	1111	10000111		
DLE	0	1	0000	01000101	PRN OFF	DLE
DC1	1	1	0001	00110110	REW 1	(DECODE 6)
DC2	2	1	0010	00101001	REW 2	DC2
DC3	3	1	0011	00100011	LOAD 1	DC3
DC4	4	1	0100	00111010	LOAD 2	DC4
NAK	5	1	0101	00001111	CAS1 RCD	
SYN	6	1	0110	00010111	CAS2 RCD	
ETB	7	1	0111	00000111	BLK FWD	
CAN	8	1	1000	00011111	BLK REV	
EM	9	1	1001	01001111	PRN ON	
SUB	:	1	1010	01110111	DC1-4 ON	
ESC	;	1	1011	01101111	DC1-4 OFF	
FS	<	1	1100	01111111	STATUS	
GS	=	1	1101	01010111	(DECODE 10)	
RS	>	1	1110	01011111	1200 B PRNLOC	
US	?	1	1111	01100111	ASCCAN	

ASCII CHARACTER COLUMN 1 R11 INSTALLED	COLUMN 2 R10* INSTALLED	Z45 PATTERN #4 INPUT ADDRESS E	D C B A	OUTPUT CODE Y8 Y7 Y6 Y5 Y4 Y3 Y2 Y1	SIGNAL SIGNATURE DOUBLE CHAR DECODE (Z46) "DLE __"	SINGLE CHAR DECODE (Z30) (COLUMN 1 CHARS ONLY)
NUL	SPACE	0	0000	10000111		
SOH	!	0	0001	10000111		
STX	"	0	0010	10000111		
ETX	#	0	0011	10000011		DC3
EOT	$	0	0100	10000100		EOT
ENQ	%	0	0101	10000111		
ACK	&	0	0110	10000111		
BEL	'	0	0111	10000111		
BS	(	0	1000	10000111		
HT	)	0	1001	10000111		
LF	*	0	1010	10000111		
VT	+	0	1011	10000111		
FF	,	0	1100	10000111		
CR	-	0	1101	10000111		
SO	.	0	1110	10000111		
SI	/	0	1111	10000110		(DECODE 6)
DLE	0	1	0000	01000101	PRN OFF	DLE
DC1	1	1	0001	00110000	REW 1	DC1
DC2	2	1	0010	00101001	REW 2	DC2
DC3	3	1	0011	00100011	LOAD 1	DC3
DC4	4	1	0100	00111010	LOAD 2	DC4
NAK	5	1	0101	00001111	CAS1 RCD	
SYN	6	1	0110	00010111	CAS2 RCD	
ETB	7	1	0111	00000111	BLK FWD	
CAN	8	1	1000	00011111	BLK REV	
EM	9	1	1001	01001111	PRN ON	
SUB	:	1	1010	01110111	DC1-4 ON	
ESC	;	1	1011	01101111	DC1-4 OFF	
FS	<	1	1100	01111111	STATUS	
GS	=	1	1101	01010111	(DECODE 10)	
RS	>	1	1110	01011111	1200 B PRNLOC	
US	?	1	1111	01100111	ASCCAN	

NOTES: (CONTINUED FROM SHEET 1)

7. FOR SWITCH (S2) OPTIONS SEE TABLE BELOW:

SWITCH S2	DESCRIPTION
1	ENABLE DC2 AND DC4 IN LOCAL
2	ENABLE DC2 AND DC4 FROM RECEIVED DATA
3	ENABLE DC1 AND DC3 IN LOCAL
4	ENABLE DC1 AND DC3 FROM RECEIVED DATA
5	ENABLE DC3 FROM TRANSMITTED DATA
6	ENABLE PLAYBACK OFF INDICATION TO BIT 7 OF STATUS CHAR.
7	ENABLE AUTO 'CAN' CHAR. ON PLAYBACK ERROR OPTION

8. FOR RDC RESISTOR OPTIONS SEE TABLE 2 BELOW

TABLE 2

DESCRIPTION	INSTALL 10 OHM RES	REMOVE 10 OHM RES
A) ENABLE PRINTING OF SECOND CHARACTER OF REMOTE SEQUENCE		R24
B) DISABLE STATUS AND 'CAN' CHARACTER		R6 A R6
C) DISABLE "DC1-4 OFF" DECODE OF REMOTE SEQUENCE		R18
D) DECODE ASCII CHARACTERS COLUMN 1 TABLE AS 2ND CHARACTER OF REMOTE FUNCTION SEQUENCE	R11	R10
E) DECODE ASCII CHARACTERS PER TABLE, COLUMN 2 AS 2ND CHARACTER OF REMOTE FUNCTION SEQUENCE	R10	R11
F) DISABLE PRINTER ON DC2	BETWEEN E3 AND E4	R2
G) ENABLE PRINTER ON DC4	BETWEEN E1 AND E2	R4
H) DISABLE PRINTER WITH A REMOTE CODE SEQUENCE	R2	BETWEEN E3 AND E4
I) ENABLE PRINTER WITH A REMOTE CODE SEQUENCE	R4	BETWEEN E1 AND E2
J) DISABLE PRINTER ON/OFF REMOTE FUNCTION		R2 & R4 OR RES BETWEEN E1 & E2 AND E3 & E4
K) ENABLE FOOTSWITCH OPTION TO J2 CONN. (J2-L)	R18	
L) ENABLE REMOTE SEARCH WITH ASC	R8 A R25	
M) ENABLE REMOTE SEARCH WITH ASC (1200 B)	R8, R25, A R17	
N) ENABLE REWIND FROM THE RIGHT END	R16	

9. FOR USE WITH 300 BAUD AUTO ANSWER, 10 OHM RESISTORS ARE INSTALLED FOR R20, R1 & R3 AS DEFINED BY THE RDC ASSEMBLY CHART SHOWN IN "TABLE 5"

10. DASH 01 OF THIS ASSEMBLY DO NOT INCLUDE Z45 (SN74188 PROM); SUBSEQUENT DASH NO'S INCLUDE THE PROM WITH THE SPECIFIC PROGRAMMED PATTERN SHOWN ON SHEET 2 OF THIS SCHEMATIC

11. FOR INFORMATION ON PROGRAMMED PATTERNS AND LABELING OF THE PROM (Z45) SEE SPECIFICATION 971521

12. THE TERMINAL FUNCTIONS PERFORMED BY THE SINGLE AND DOUBLE LEVEL DECODES ARE SHOWN IN TABLE 3

13. STATUS CHARACTER BITS ARE DEFINED IN TABLE 4

14. R23 NOT USED (10 Ω), R14 & R22 ALWAYS INSTALLED (10 Ω)

15. SWITCH S1 WHEN OFF, RESETS ALL LATCHES AND LOGIC AND DISABLES THE ENTIRE RDC CARD EXCEPT FOR THE DECODING OF THE LINE DISCONNECT CODE (USUALLY EOT) FOR THE AUTO ANSWER CARD.

16. BRINGING PIN 9 (AUXINOF-) TO LOGIC '0' DISABLES THE RDC CARD FROM INITIATING ANY ACTION DUE TO DECODING OF COMMAND CHARACTER FROM THE SERIAL BUS. IT WILL NOT RESET ANY LATCHES NOR DISABLE ASC REMOTE SEARCH ENABLE OR THE AUTO 'CAN' CHAR. OPTION, OR THE FOOT SWITCH OPTION.

TABLE 3
TERMINAL REMOTE FUNCTIONS

SIGNAL SIGNATURE	TERMINAL FUNCTION
DC1	PLAYBACK ON
DC2	RECORD ON
DC3	PLAYBACK OFF.
DC4	RECORD OFF
EOT	AUTOMATIC DISCONNECT BY AUTO ANSWER
DLE	FIRST CHARACTER OF DOUBLE CHARACTER DECODE
(DECODE 6)	SPARE NOT USED
PRNOFF	PRINTER OFF
REW1	REWIND CASSETTE #1
REW2	REWIND CASSETTE #2
LOAD 1	LOAD CASSETTE #1
LOAD 2	LOAD CASSETTE #2
CAS1 RCD	CASSETTE #1 RECORD
CAS2 RCD	CASSETTE #2 RECORD
BLKFWD	BLOCK FORWARD
BLK REV	BLOCK REVERSE
PRNON	PRINTER ON
DC1-4 OFF	DISABLE DC1-THRU DC4 FUNCTION ON RECEIVED DATA
DC1-4 ON	ENABLE DC1-THRU DC4 FUNCTION ON RECEIVED DATA
STATUS	TERMINAL STATUS REQUEST
(DECODE 10)	SPARE NOT USED
1200 PRNLOC	FUTURE [illegible] OPTION
ASCCAN	CANCEL ASC REMOTE SEARCH

TABLE 4 (STATUS CHAR)

BIT NO.	FUNCTION
1 (LSB)	PLAYBACK READY.
2	PLAYBACK ERROR
3	CLEAR LEADER CASSETTE 1
4	CLEAR LEADER CASSETTE 2
5	RECORDER READY
6	PRINTER READY
7	[illegible]
8 (MSB)	NONE HIGH OUTPUT

SPARES

TABLE 5

ASSY NUMBER	ASSY DESCRIPTION		PROGRAMMED PATTERN Z45	10Ω RESISTORS INSTALLED	RES	BETWEEN	OPEN	CLOSED
973901-0007	RDC 1200 BAUD	CODE 4	PATTERN 4	R2, R3, R4, R5, R6, R10, R16, R18, R24			6	1-5, 7
-0006	1200	COMPUTER OPTION	1	R5, R6, R8, R10, R16, R17, R18, R19, R24, R25	R2 R4	E3 & E4 E1 & E2	6 & 7	1-5
-0005	300	CODE 3	3	[illegible]				
-0004	300	CODE 2	2	[illegible]				
-0003	1200	CODE 1	1	[illegible]				
-0002	RDC 300 BAUD	CODE 1	PATTERN 1	[illegible]				
973901-0001	RDC, NO PROM		SEE NOTE 10	[illegible]			6 & 7	1-5

INSTALL — S2 SWITCH POSITIONS

TEXAS INSTRUMENTS

E 971504 B

SH 2

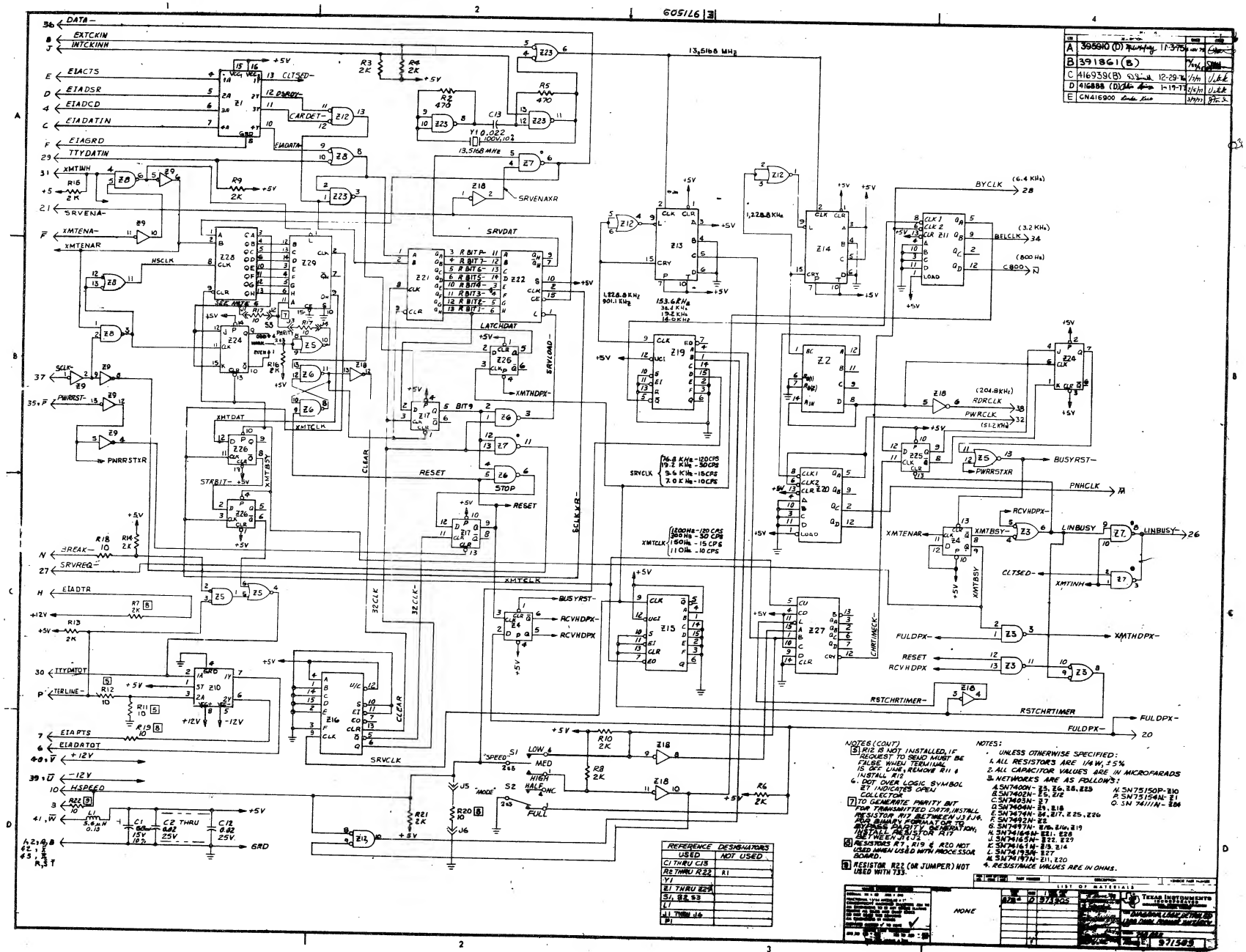

REFERENCE DESIGNATORS USED	NOT USED
C1 THRU C13	
R3 THRU R22	R1
Y1	
Z1 THRU Z29	
S1, S2, S3	
L1	
J1 THRU J6	
P1	

NOTES:
1. UNLESS OTHERWISE SPECIFIED:
2. ALL RESISTORS ARE 1/4 W, ±5%
3. ALL CAPACITOR VALUES ARE IN MICROFARADS
4. NETWORKS ARE AS FOLLOWS:
A. SN7400N- 25, 26, 28, 223
B. SN7402N- 26, 212
C. SN7403N- 27
D. SN7404N- 29, 218
E. SN7474N- 24, 217, 225, 226
F. SN7492N- 22
G. SN7497N- 216, 216, 219
H. SN74164N- 221, 228
I. SN74165N- 222, 227
K. SN74161N- 213, 214
L. SN74193N- 227
M. SN74197N- 211, 220
N. SN75150P- 210
P. SN75154N- 21
Q. SN 74111N- 204
4. RESISTANCE VALUES ARE IN OHMS.

NOTES (CONT)
5. R12 IS NOT INSTALLED IF REQUEST TO SEND MUST BE FALSE WHEN TERMINAL IS OFF LINE, REMOVE R11 & INSTALL R12.
6. DOT OVER LOGIC SYMBOL (Z7) INDICATES OPEN COLLECTOR.
7. TO GENERATE PARITY BIT FOR TRANSMITTED DATA, INSTALL RESISTOR R17 BETWEEN J3 & J4. FOR EVEN PARITY, INSTALL JUMPER BETWEEN J3 & J4. FOR ODD PARITY, OMIT RESISTOR R17 OR JUMPER BETWEEN J3 & J4.
8. RESISTORS R7, R19 & R20 NOT USED WHEN USED WITH PROCESSOR BOARD.
9. RESISTOR R22 (OR JUMPER) NOT USED WITH 733.

REV	DESCRIPTION
A	395910 (D) 11-3-75
B	391861 (B)
C	4169390 (B) 12-29-76
D	416888 (D) 1-19-77
E	CN416900

LIST OF MATERIALS

NONE

TEXAS INSTRUMENTS INCORPORATED
AMARILLO, TEXAS
MADE IN U.S.A.

SIZE B | 971505 | SHEET 1 OF 1

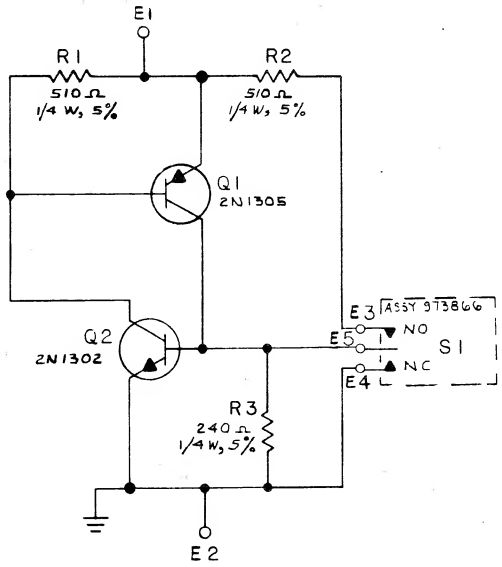

REVISIONS				
ZONE	LTR	DESCRIPTION	DATE	APPROVED
		1.		

HIGHEST REFERENCE DESIGNATOR USED					
E5	Q2	R3			

973865

.2 / .1 QTY REQD	ITEM NO	CODE IDENT	PART OR IDENTIFYING NUMBER	NOMENCLATURE OR DESCRIPTION	PROCUREMENT SPECIFICATION

PARTS LIST

UNLESS OTHERWISE SPECIFIED
- REMOVE ALL BURRS AND SHARP EDGES
- CONCENTRICITY MACHINED DIAMETERS .010 FIR
- DIMENSIONAL LIMITS APPLY BEFORE FINISH PROCESSING
- IDENTIFYING NUMBERS SHOWN IN PARENTHESES FOR REFERENCE ONLY
- INTERPRET DRAWING IN ACCORDANCE WITH MIL-STD-100

HOLE TOLERANCE

.013 THRU .125 ± .004 − .001	.126 THRU 250 ± .005 − .001	.251 THRU 500 ± .006 − .001
.501 THRU .750 ± .008 − .001	.751 THRU 1.000 ± .010 − .001	1.001 THRU 2.000 ± .012 − .001

973864	8726
NEXT ASSY	USED ON
APPLICATION	

UNLESS OTHERWISE SPECIFIED
- DIMENSIONS ARE IN INCHES
- TOLERANCES: ANGLES ± 1° 3 PLACE DECIMALS ± .010 2 PLACE DECIMALS ± .02

MATERIAL:

DWN	J Piercy 3-5-74 DATE
CHK	21 MAL 74
ENGR	Engr Cons Staff 74
QA	
APVD	4-8-74
CONTR NO	1/8/74
DESIGN ACTIVITY RELEASE	4/8/74

TEXAS INSTRUMENTS INCORPORATED
Equipment Group Dallas, Texas

DIAGRAM, SCHEMATIC, DETAILED – SWITCH FILTER

SIZE	CODE IDENT NO	DRAWING NO
C	96214	973865

SCALE NONE REV SHEET

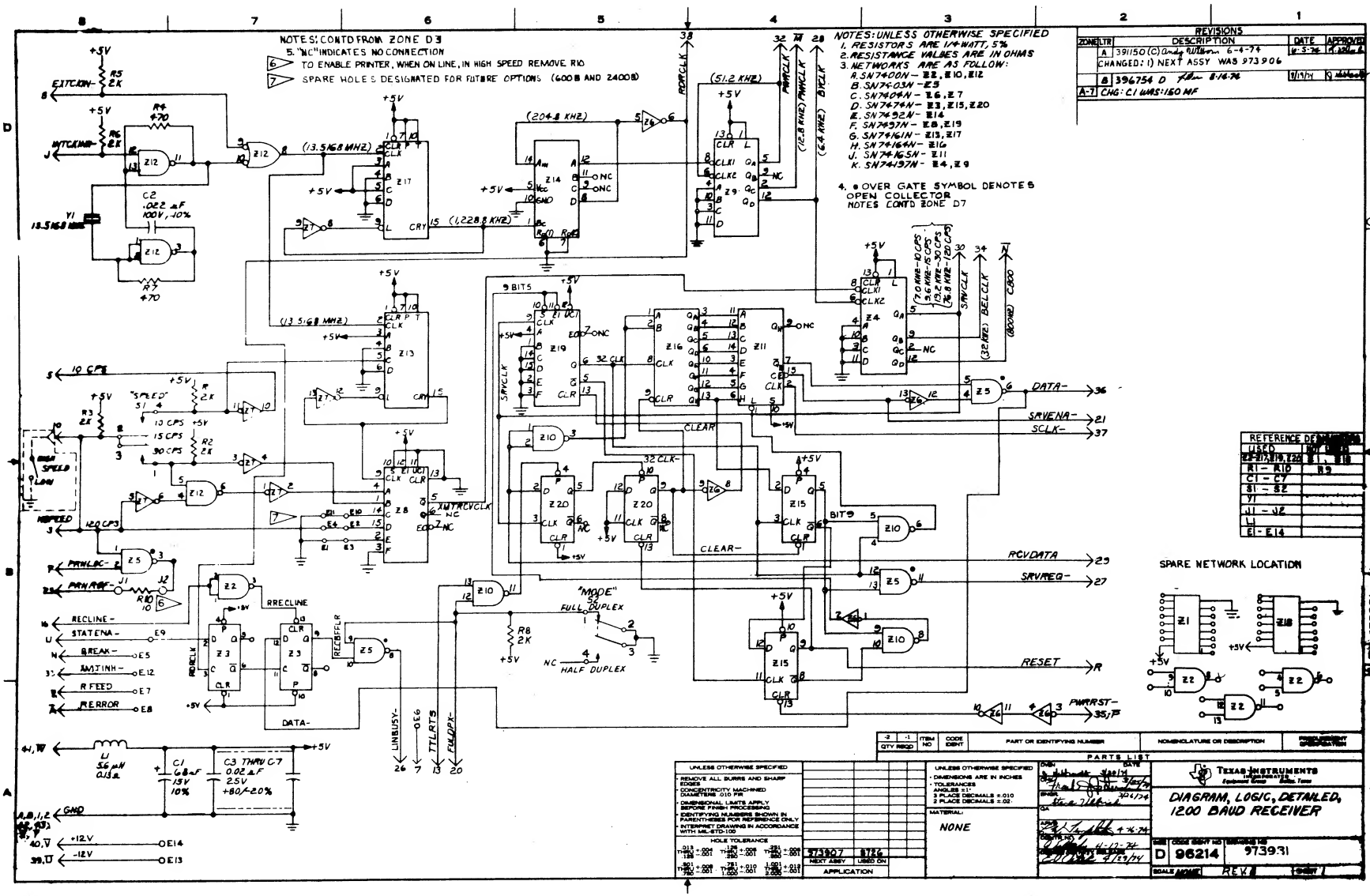
NOTES: CONTD FROM ZONE D3
5. "NC" INDICATES NO CONNECTION
6 TO ENABLE PRINTER, WHEN ON LINE, IN HIGH SPEED REMOVE R10
7 SPARE HOLES DESIGNATED FOR FUTURE OPTIONS (600B AND 2400B)
NOTES: UNLESS OTHERWISE SPECIFIED
1. RESISTORS ARE 1/4 WATT, 5%
2. RESISTANCE VALUES ARE IN OHMS
3. NETWORKS ARE AS FOLLOW:
A. SN7400N - Z2, Z10, Z12
B. SN7403N - Z5
C. SN7404N - Z6, Z7
D. SN7474N - Z3, Z15, Z20
E. SN7492N - Z14
F. SN7497N - Z8, Z19
G. SN74161N - Z13, Z17
H. SN74164N - Z16
J. SN74165N - Z11
K. SN74197N - Z4, Z9
4. • OVER GATE SYMBOL DENOTES OPEN COLLECTOR
NOTES CONTD ZONE D7
REVISIONS
ZONE LTR DESCRIPTION DATE APPROVED
A 391150 (C) 6-4-74
CHANGED: 1) NEXT ASSY WAS 973906
B 396754 D 8-14-74
A-7 CHG: C1 WAS: 150 MF
REFERENCE DESIGNATIONS
USED
R1 - R10
C1 - C7
S1 - S2
Y1
J1 - J2
L1
E1 - E14
SPARE NETWORK LOCATION
PARTS LIST
QTY REQD
ITEM NO
CODE IDENT
PART OR IDENTIFYING NUMBER
NOMENCLATURE OR DESCRIPTION
PROCUREMENT SPECIFICATION
UNLESS OTHERWISE SPECIFIED
• REMOVE ALL BURRS AND SHARP EDGES
• CONCENTRICITY MACHINED DIAMETERS .010 FIR
• DIMENSIONAL LIMITS APPLY BEFORE FINISH PROCESSING
• IDENTIFYING NUMBERS SHOWN IN PARENTHESES FOR REFERENCE ONLY
• INTERPRET DRAWING IN ACCORDANCE WITH MIL-STD-100
HOLE TOLERANCE
973907
NEXT ASSY
8726
USED ON
APPLICATION
UNLESS OTHERWISE SPECIFIED
• DIMENSIONS ARE IN INCHES
• TOLERANCES
ANGLES ±1°
3 PLACE DECIMALS ±.010
2 PLACE DECIMALS ±.02
MATERIAL:
NONE
TEXAS INSTRUMENTS
INCORPORATED
DIAGRAM, LOGIC, DETAILED, 1200 BAUD RECEIVER
D 96214
973931
SCALE NONE
REV 8
SHEET 1
973931

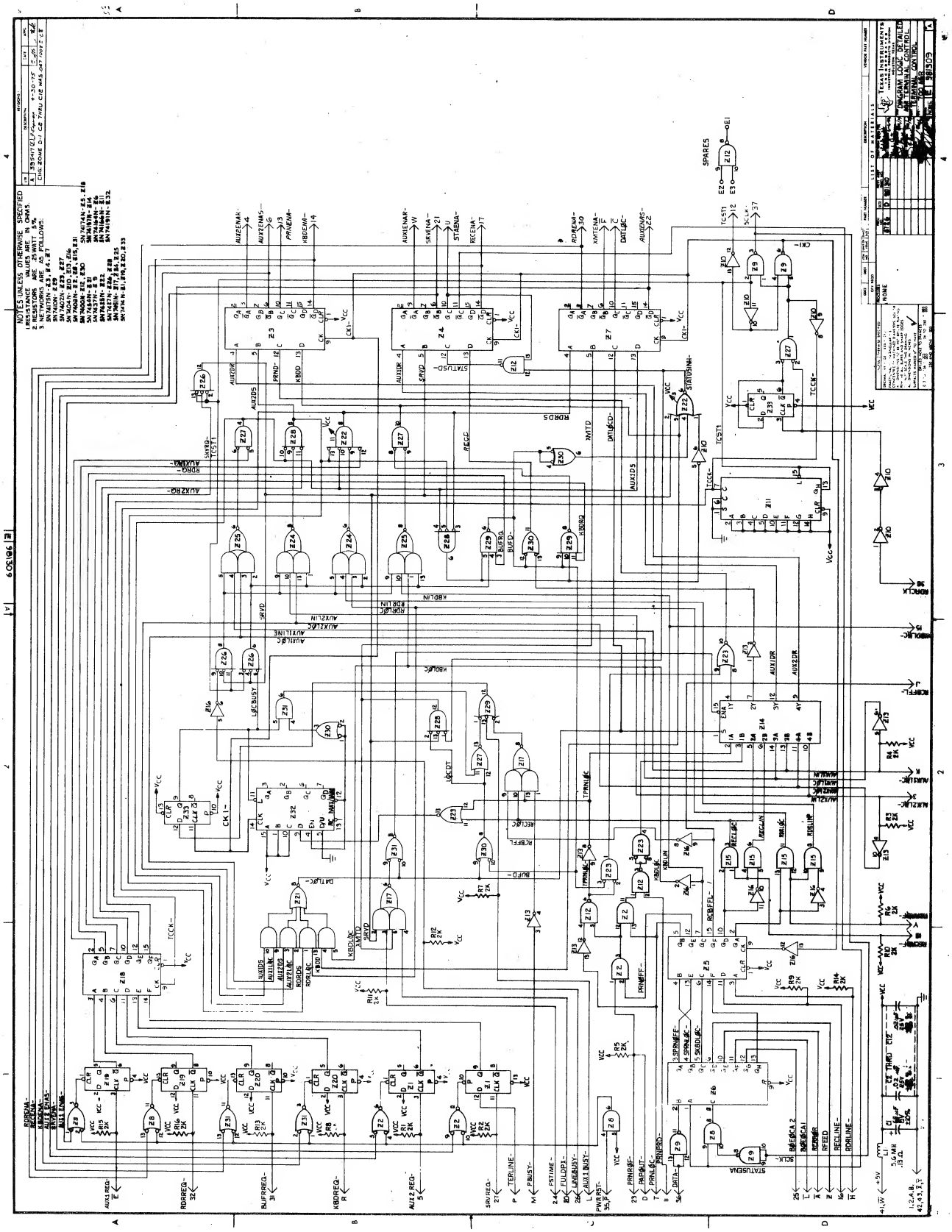

NOTES: UNLESS OTHERWISE SPECIFIED
1. RESISTOR VALUES ARE IN OHMS.
2. RESISTORS ARE .25W ±5%.
3. CAPACITANCE IS IN MICROFARADS.
4. DIODES ARE IN914B.
5. REMOVE R20 TO DISABLE END OF LINE ALARM.
6. NETWORKS ARE AS FOLLOWS:
SN7402N-Z1, Z3, Z17, Z31
SN74174N-Z2, Z4
SN74175N-Z7, Z22, Z29, Z32
SN74121N-Z8
SN7427N-Z10, Z16, Z30
SN7497N-Z11, Z35
SN74161N-Z25
SN7409N-Z27
SN7410N-Z28,
SN74164N-Z34
SN7474N-Z13, Z14
SN74191N-Z15
SN7403N-Z18
SN7404N-Z20, Z33
SN7400N-Z21, Z24, Z26, Z9
SN74H54-Z23
SN74132N-Z12
XZ36-SOCKET (TEST POINTS)
Z6-RESISTOR PACK (2K OHMS)
SN37228N-Z5
7. A DOT BESIDE A LOGIC SYMBOL INDICATES AN OPEN COLLECTOR OUTPUT.
REVISIONS
LTR
DESCRIPTION
C 415527 (E) J.SULLIVAN 7-14-76
TEXAS INSTRUMENTS

NOTES: UNLESS OTHERWISE SPECIFIED
1. RESISTANCES VALUES ARE IN OHMS.
2. DOT OVER LOGIC SYMBOL INDICATES OPEN COLLECTOR.
3. NETWORKS ARE AS FOLLOWS.
A. SN7400N - Z12, Z17, Z26, Z30, Z34
B. SN7402N - Z10, Z15
C. SN7403N - Z6
D. SN7404N - Z14, Z16
E. SN7408N - Z2, Z5, Z8, Z27, Z31
F. SN7410N - Z29, Z33
G. SN7427N - Z3, Z9, Z28, Z32
H. SN7451N - Z13
J. SN74109N - Z19, Z20, Z21, Z24, Z25
K. SN74157N - Z4
L. SN74174N - Z1, Z7
M. SN74221N - Z22
N. SN74107N - Z18, Z23
P. SN7437N - Z11
REVISIONS
REFERANCE DESIGNATOR CHART
R1 THRU R4
C1 THRU C15
Z1 THRU Z34
TEXAS INSTRUMENTS
DIAGRAM, LOGIC-DETAILED
MOTION CONTROL
E 96214
981316
SCALE NONE
REV B

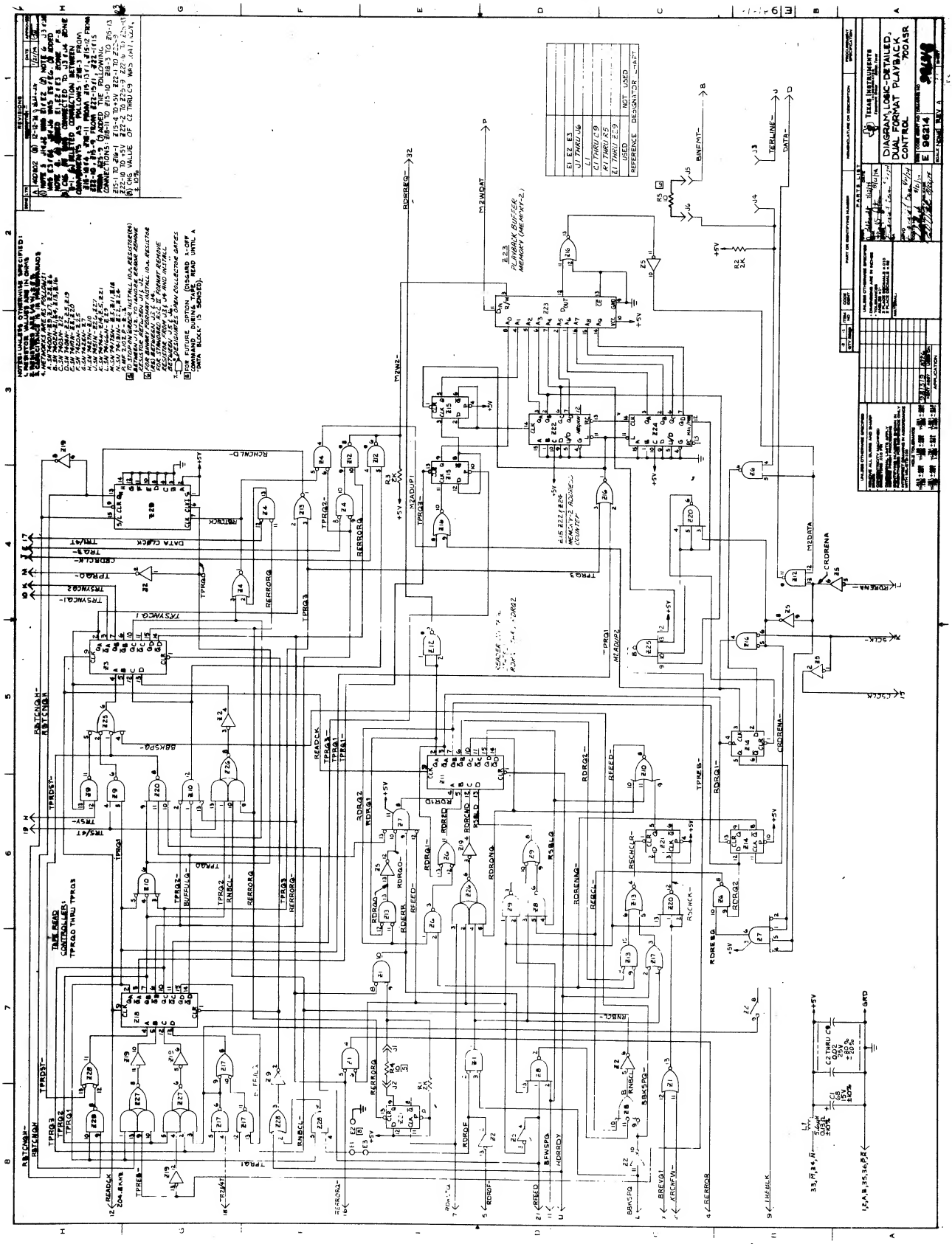

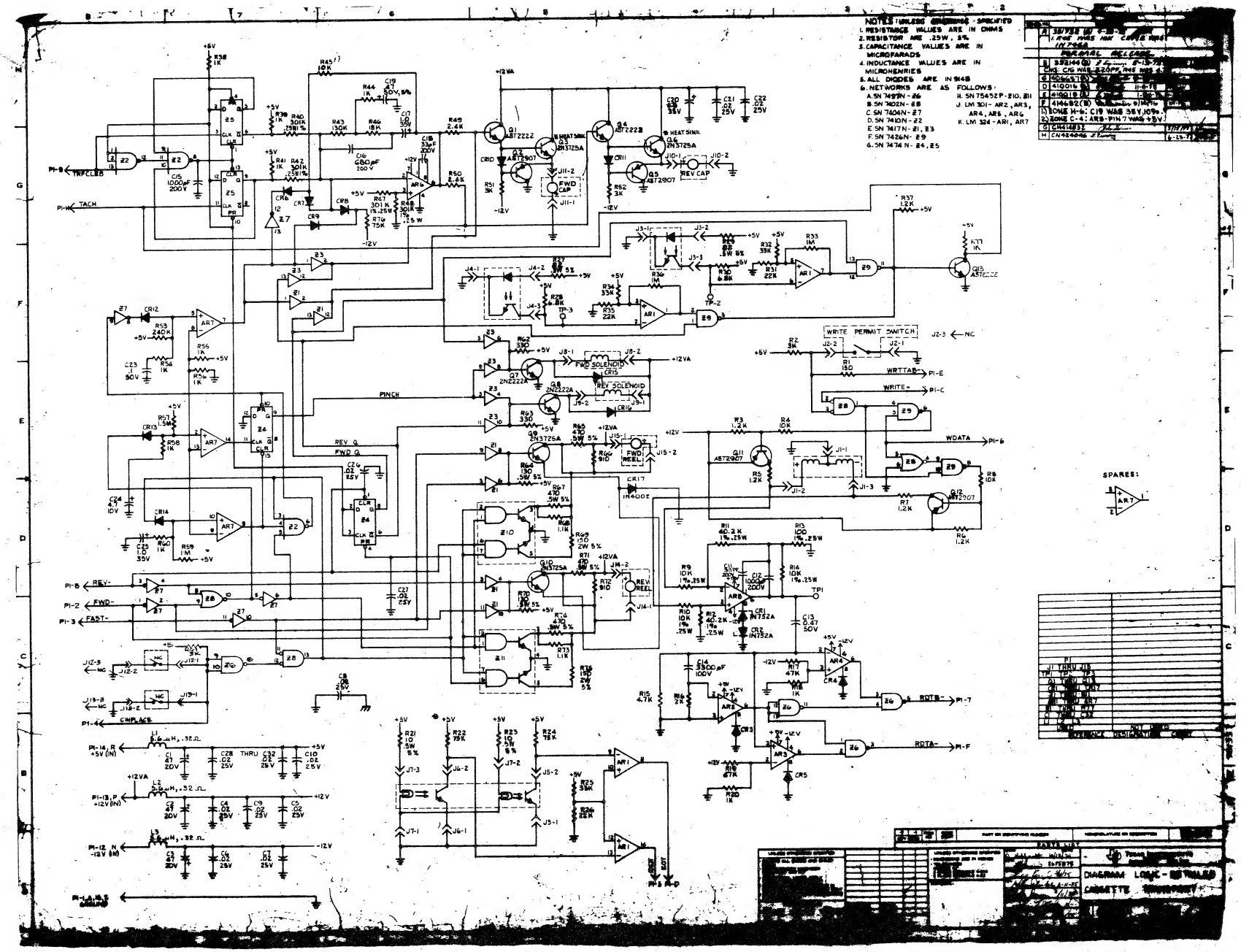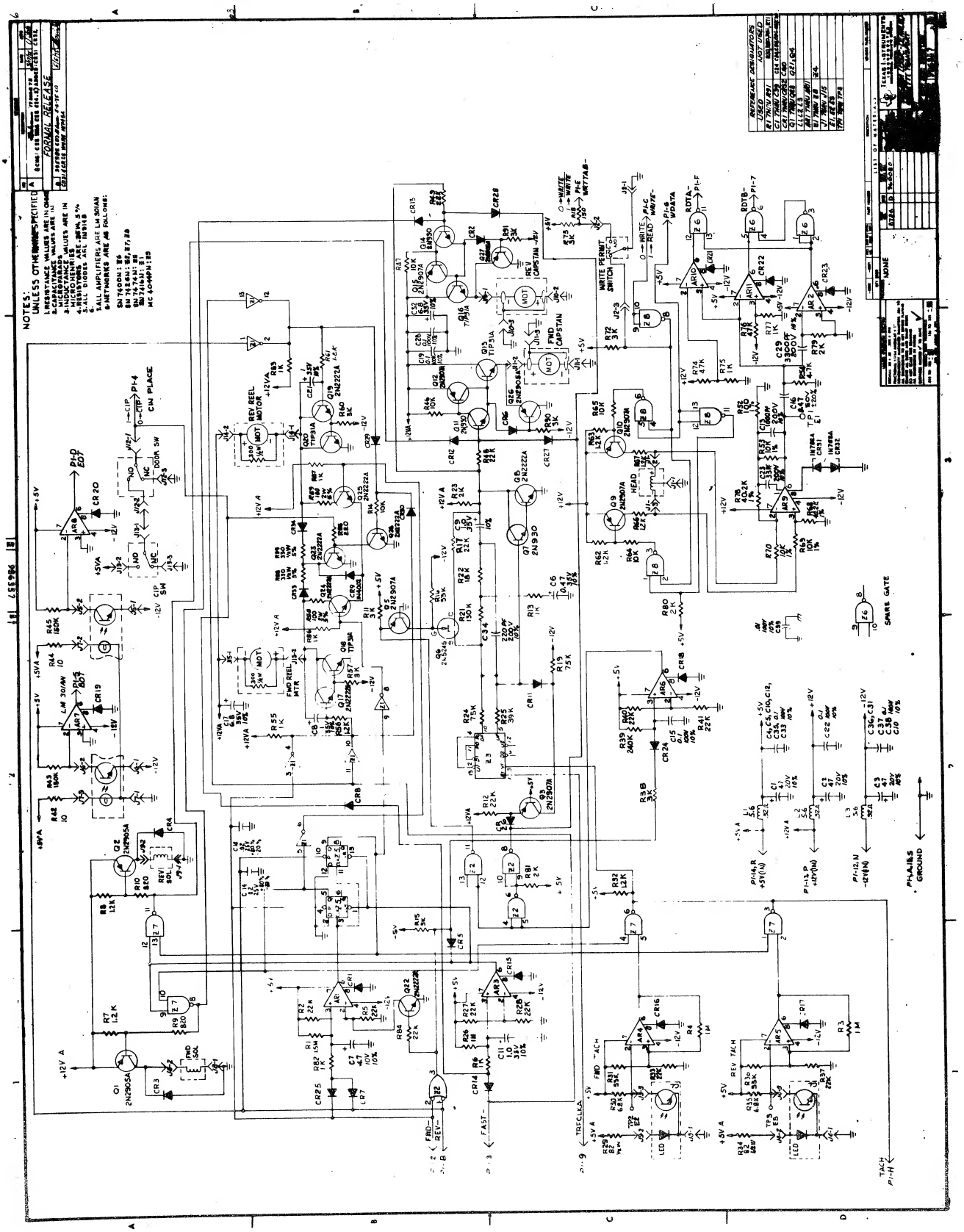
NOTES: UNLESS OTHERWISE SPECIFIED
1. RESISTANCE VALUES ARE IN OHMS
2. RESISTOR ARE .25W, 5%
3. CAPACITANCE VALUES ARE IN MICROFARADS
4. INDUCTANCE VALUES ARE IN MICROHENRIES
5. ALL DIODES ARE IN914B
6. NETWORKS ARE AS FOLLOWS:
A. SN 7497N - Z6
B. SN 7402N - Z8
C. SN 7404N - Z7
D. SN 7410N - Z2
E. SN 7417N - Z1, Z3
F. SN 7426N - Z9
G. SN 7474N - Z4, Z5
H. SN 75452P - Z10, Z11
J. LM 301 - AR2, AR3, AR4, AR5, AR6
K. LM 324 - AR1, AR7
1. R45 WAS 10K CHANGE WAS 1N746A
FORMAL RELEASE
CHG: C16 WAS 220PF, R45 WAS 4.7
1) ZONE H-6: C19 WAS 35V, 10%
2) ZONE C-4: AR8-PIN 7 WAS +5V
WRITE PERMIT SWITCH
FWD SOLENOID
REV SOLENOID
FWD REEL
REV REEL
FWD CAP
REV CAP
PINCH
REV Q
FWD Q
TACH
TRFCLEB
WRTTAB
WRITE
WDATA
RDTB
RDTA
CMPLACE
SPARES:
DIAGRAM LOGIC - DETAILED
CASSETTE TRANSPORT